Productivity® Motion

PS-AMC, P1-RX, and SureServo2 Demonstration Panel

This information provided by Automationdirect.com is provided "as is" without any guarantee of any kind.
Example programs and schematics are provided by Automationdirect.com to assist others.
Automationdirect.com does not guarantee that this example program or schematic is suitable for your particular application, nor do we assume any responsibility for the example program or schematics in your application.

AutomationDirect
3505 Hutchinson Rd
Cumming, GA 30040
(800) 633-0405

Cover page

REV.	DATE	CHANGES
0	6/18/2021	

REVISION 0

PAGE 01

PROJECT 22102103

LOCATION: L1 Cabinet

This information provided by Automationdirect.com is provided "as is" without any guarantee of any kind.
Example programs and schematics are provided by Automationdirect.com to assist others.
Automationdirect.com does not guarantee that this example program or schematic is suitable for your particular application, nor do we assume any responsibility for the example program or schematics in your application.

1-Cabinet

Drawing	Revision	Date	Created by	Description
01	0	6/18/2021	CRK	Cover page
02	0	6/18/2021	CRK	Drawing list
03	0	7/28/2021	CRK	Drawing list
04	0	6/18/2021	CRK	Bill of materials
05	0	6/18/2021	CRK	Bill of materials
06	0	8/17/2021	CRK	Bill of materials
07	0	6/18/2021	CRK	List of cables grouped by reference
08	0	7/28/2021	CRK	List of cables grouped by reference
11	0	6/18/2021	CRK	Main Subpanel Layout
20	0	6/18/2021	CRK	AC Power Distribution
21	0	6/21/2021	CRK	AC Power Distribution 2/2
28	0	6/18/2021	CRK	DC Power Distribution
38	0	6/18/2021	CRK	PLC Power, Data and Networking
40	0	6/18/2021	CRK	Terminal Strip - Digital I/O
43	0	6/18/2021	CRK	Terminal Strip - Analog I/O
44	0	7/23/2021	CRK	Terminal Strip - Motion
60	0	6/18/2021	CRK	PLC - Digital I/O
62	0	6/18/2021	CRK	PLC - Analog I/O
81	0	6/30/2021	CRK	AMC - Motion Controller 1/4
82	0	7/27/2021	CRK	AMC - Motion Controller 2/4
83	0	7/28/2021	CRK	AMC - Motion Controller 3/4
84	0	7/28/2021	CRK	AMC - Motion Controller 4/4
91	0	6/18/2021	CRK	Safety Controller
92	0	6/22/2021	CRK	Safety Controller Expansion Modules

This information provided by Automationdirect.com is provided "as is" without any guarantee of any kind. Example programs and schematics are provided by Automationdirect.com to assist others. Automationdirect.com does not guarantee that this example program or schematic is suitable for your particular application, nor do we assume any responsibility for the example program or schematics in your application.

-> 1-Cabinet

Drawing	Revision	Date	Created by	Description
93	0	6/18/2021	CRK	E-Stop Stations
95	0	7/12/2021	CRK	Servo STO Interfaces
100	0	8/17/2021	CRK	FX1-GX1
101	0	8/17/2021	CRK	X1-PLC I/O(1/9)
102	0	8/17/2021	CRK	X1-PLC I/O(2/9)
103	0	8/17/2021	CRK	X1-PLC I/O(3/9)
104	0	8/17/2021	CRK	X1-PLC I/O(4/9)
105	0	8/17/2021	CRK	X1-PLC I/O(5/9)
106	0	8/17/2021	CRK	X1-PLC I/O(6/9)
107	0	8/17/2021	CRK	X1-PLC I/O(7/9)
108	0	8/17/2021	CRK	X1-PLC I/O(8/9)
109	0	8/17/2021	CRK	X1-PLC I/O(9/9)
110	0	8/17/2021	CRK	X20-0VDC Bus(1/2)
111	0	8/17/2021	CRK	X20-0VDC Bus(2/2)
112	0	8/17/2021	CRK	X99-E-Stop Inputs(1/2)
113	0	8/17/2021	CRK	X99-E-Stop Inputs(2/2)
114	0	8/17/2021	CRK	GX2-Ground Bus(1/1)

This information provided by Automationdirect.com is provided "as is" without any guarantee of any kind. Example programs and schematics are provided by Automationdirect.com to assist others. Automationdirect.com does not guarantee that this example program or schematic is suitable for your particular application, nor do we assume any responsibility for the example program or schematics in your application.

Automation Direct

Part Number	Quantity	Manufacturer	Description	Usage
EA9-T7CL-R	1	Automation Direct	HMI, EA9-Series, 7 inch, color, 800x480, Ethernet, HDMI, no audio	HMI1
ECX1030	2	Automation Direct	Replacement contact block for 22mm pushbuttons and selector switches - P/N adds -2 or -5 for quantity	ESS1, ESS1
ECX1040	1	Automation Direct	Replacement N.O. contact block for 22mm pushbuttons and selector switches - P/N adds -2 or -5 for quantity	RSS1
GCX1131	1	AutomationDirect	Pushbutton, 22mm metal, twist-to-release, red 40mm mushroom operator	ESS1
GCX1206-24L	1	Automation Direct	Pushbutton, 22mm metal, momentary, LED illuminated, white, flush operator	RSS1
DN-EB35	22	Automation Direct	Terminal Block End Stop / Bracket, DIN mount, pack of 50	L1 L1-SP, L1 L1-SP
DN-EC14	6	Automation Direct	3-level DINnector terminal block end cap	X1 , X1 , X99 , X1 , X1 , X1
DN-F10MN	4	Automation Direct	Fuse Holder, No Indicator	FX1 1, FX1 2, FX1 3, FX1 4
DN-G10	6	Automation Direct	Terminal block, 24-10 AWG, Grounding Terminal, DIN Mounted	GX1 1, GX2 1, GX2 4, GX2 6, GX2 7, GX2 8
DN-Q12B-2-2-A	9	Automation Direct	DINnector screwless single-level feedthrough terminal block, two-connection to two-connection, accepts wire size 24-12 AWG, blue, 20A, 600V rated (UL), 35mm DIN rail mount, 10kA SCCR	X20 1, X20 2, X20 3, X20 4, X20 5, X20 6, X20 7, X20 8, X20 9
DN-QEC12-2-2	1	Automation Direct	DINnector terminal block end cover, gray. Package of 25. For use with DN-Q12-2-2-A series terminal blocks	X20
DN-QG12-2-2	1	Automation Direct	DINnector screwless grounding terminal block, two-connection to two-connection, accepts wire size 24-12 AWG, green and yellow, 35mm DIN rail mount, 10kA SCCR	X20 10
DN-R35S1	4	Automation Direct	DIN Rail, 35mm x 7.5mm x 1000mm, pack of 10	L1 L1-SP, L1 L1-SP, L1 L1-SP, L1 L1-SP
DN-TL14-A	39	Automation Direct	3-level DINnector terminal block	X99 1, X1 1, X1 2, X99 2, X1 3, X99 3, X99 4, X1 4, X1 5, X99 5, X99 6, X1 6, X1 7, X1 8, X1 9, X1 10, X1 11, X1 12, X1 13, X1 14, X1 15, X1 16, X1 17, X1 18, X1 19, X1 20, X1 21, X1 22, X1 23, X1 24, X1 25, X1 26, X1 27, X1 28, X1 29, X1 30, X1 31, X1 32, X1 33
P1-4ADL2DAL-1	1	Automation Direct	4-channel current input, 2-channel current output, 13-bit resolution	PLC1 N2
P1-15CDD2	1	Automation Direct	8-channel input / 7-channel sourcing output for Productivity 1000	PLC1 N1
P1-RX	1	Automation Direct	P1-RX Remote Base Controller	PLC1
PS-AMC4	1	Automation Direct	Productivity Series Advanced Motion Controller, 4-axis	MC1
PSB24-120S	1	Automation Direct	RHINO switching power supply, 24 VDC (adjustable) output, 5A, 120W, 120/240 VAC or 120-375 VDC nominal input, 1-phase, aluminum housing, IP20, 35mm DIN rail mount, removable screw terminal, hazardous location rated	DCPS1
SE2-SW5U	1	Automation Direct	5 Port Unmanaged Network Switch	NET1

AutomationDirect
3505 Hutchinson Rd
Cumming, GA 30040
(800) 633-0405

Bill of materials

REV.	DATE	CHANGES
0	6/18/2021	

This information provided by Automationdirect.com is provided "as is" without any guarantee of any kind. Example programs and schematics are provided by Automationdirect.com to assist others. Automationdirect.com does not guarantee that this example program or schematic is suitable for your particular application, nor do we assume any responsibility for the example program or schematics in your application.

REVISION 0

PAGE 04

PROJECT 22102103

LOCATION: L1

Cabinet

-> Automation Direct

Part Number	Quantity	Manufacturer	Description	Usage
SV2A-2075	4	Automation Direct	SureServo2 servo drive, 750W, 110/230 VAC, 1 and 3-phase, (1) RS-485 (RJ45) port(s), Modbus. For use with 750W systems	DRV1, DRV2, DRV3, DRV4
SV2-CM-MODTCP	4	Automation Direct	SureServo2 communication module, Modbus TCP, 1 port, (1) Ethernet (RJ45) port(s). For use with all SureServo2 drives	DRV1, DRV2, DRV3, DRV4
SV2L-207N	4	Automation Direct	SureServo2 low inertia AC brushless servo motor, 750W, 3-phase input, 24-bit (16777216 ppr) encoder. For use with SureServo2 SV2A-2075 750W drive	SM1, SM2, SM3, SM4
DW-AD-601-M8-121	12	Contrinex	Contrinex inductive proximity sensor, tubular, 8mm diameter x 22mm body, 304 stainless steel housing, NPN, N.O. output, 1.5mm sensing distance, flush, 5 kHz switching frequency, IP67, pigtail	PRX1, PRX2, PRX3, PRX4, PRX5, PRX6, PRX7, PRX8, PRX9, PRX10, PRX11, PRX12
FAZ-C5/2-NA	1	Eaton	Circuit Breaker: 5A, 2P, 15kA IEC 10kA UL/CSA, Type C	CB5
FAZ-C20/3-NA	4	Eaton	Circuit Breaker: 20A, 1P, 15kA IEC 14kA UL/CSA, Type C	CB1, CB2, CB3, CB4
ZEK35-UL-1	3	Eaton	Terminal Lug, for use with Eaton Buss Bars	CBB1, CBB1, CBB1
ZSVUL16-3P-3TE12SP	1	Eaton	Bus bar, 3 pole style, 12 point, Eaton, use with FAZ-NA series CBs	CBB1
BW9F0CA-15A	1	Fuji	Fuji Electric handle, flange, 4.9ft/1.5m cable length, black, external front mount, defeatable, lockable, NEMA 12. For use with Fuji Electric BW125 series MCCBs.	L1
BW125JAGU-3P040SB	1	Fuji	Molded Case Circuit Breaker (MCCB), Fuji Electric BW125 series, 125A frame, UL 489 rated for 40A, 600VAC, 3-pole unit with thermal magnetic trip, panel mountable, line and load lug terminals and terminal covers included	DSC1
T1E-1540W	5	Iboco	Iboco open slot thin finger wire duct, 1.5 in wide x 4.0 in high, white	L1 L1-SP, L1 L1-SP, L1 L1-SP, L1 L1-SP, L1 L1-SP
T1E-2240W	3	Iboco	Iboco open slot thin finger wire duct, 2.25 in wide x 4.0 in high, white	L1 L1-SP, L1 L1-SP, L1 L1-SP
UK1F-G6-1E	4	Micro Detectors	Micro Detectors ultrasonic proximity sensor, tubular, 18mm diameter x 91.6mm body, 316L stainless steel housing, PNP, 4-20 mA analog output, N.O./N.C. selectable output, 200-2200mm sensing distance, 2 Hz switching frequency, IP67, 5-pin M12 quick-disconne	DST1, DST2, DST3, DST4
LS7-502DWC-RYGBC	1	PATLITE	Patlite LED signal tower, (5) tiers, 70mm diameter, red/amber/green/blue/clear, permanent light function, 24 VDC, NPN/PNP polarity, clear lens, 244mm body length, dark gray, 360 degree viewing angle, direct mount, IP65	STL1
MOSAIC-M1	1	ReeR	ReeR MOSAIC master safety controller, 24 VDC, (8) digital safety input(s), (2) EDM/(re)start input(s), (2) pair OSSD safety output(s), (2) status monitoring output(s), pluggable screw terminals	SC1
MOSAIC-MOR4S8	2	ReeR	ReeR MOSAIC safety expansion module, 24 VDC, (4) EDM/(re)start input(s), (4) N.O. safety output(s), (8) status monitoring output(s), pluggable screw terminals. For use with MOSAIC-M1 safety controller	SC1 N1, SC1 N2
SCE-36XEL3110LP	1	SCE	XEL LP ENCLOSURES FOR MOST STANDARD TYPE DISCONNECTS	L1
SCE-42P36	1	SCE	Panel, 39 X 33, Steel, White finish, for use with Saginaw 42H X 36W Enclosure	L1 L1-SP
011419-00	1	Stego	Thermostat, Variable setpoint, N.O.	SW1

This information provided by Automationdirect.com is provided "as is" without any guarantee of any kind. Example programs and schematics are provided by Automationdirect.com to assist others. Automationdirect.com does not guarantee that this example program or schematic is suitable for your particular application, nor do we assume any responsibility for the example program or schematics in your application.

-> Automation Direct

Part Number	Quantity	Manufacturer	Description	Usage
787-1668-106-000	1	Wago	Electronic Circuit Breaker, UL 1077 Supplementary, Eight load protection	CB100

This information provided by Automationdirect.com is provided "as is" without any guarantee of any kind. Example programs and schematics are provided by Automationdirect.com to assist others. Automationdirect.com does not guarantee that this example program or schematic is suitable for your particular application, nor do we assume any responsibility for the example program or schematics in your application.

Automation Direct-SV2C-E122-03NN

Label	Description	Location path	From location	To location	Length (m)
CBL-02008K	DRV1 Encoder	L10<>L1-SP	L10 - Machine	L1-SP - Cabinet Subpanel	3
CBL-02023K	DRV2 Encoder	L10<>L1-SP	L10 - Machine	L1-SP - Cabinet Subpanel	3
CBL-02123K	DRV4 Encoder	L10<>L1-SP	L10 - Machine	L1-SP - Cabinet Subpanel	3
CBL-02108K	DRV3 Encoder	L10<>L1-SP	L10 - Machine	L1-SP - Cabinet Subpanel	3
					12

Automation Direct-SV2C-PA18-03FN

Label	Description	Location path	From location	To location	Length (m)
CBL-02004K	DRV1 Motor	L10<>L1-SP	L10 - Machine	L1-SP - Cabinet Subpanel	3
CBL-02019K	DRV2 Motor	L10<>L1-SP	L10 - Machine	L1-SP - Cabinet Subpanel	3
CBL-02104K	DRV3 Motor	L10<>L1-SP	L10 - Machine	L1-SP - Cabinet Subpanel	3
CBL-02119K	DRV4 Motor	L10<>L1-SP	L10 - Machine	L1-SP - Cabinet Subpanel	3
					12

Automation Direct-V40172-250

Label	Description	Location path	From location	To location	Length (m)
CBL-09104D	Console Reset Switch	L1<>L1	L1 - Cabinet	L1 - Cabinet	1.21
CBL-09111D	Console Safety and HMI	L1<>L1-SP	L1 - Cabinet	L1-SP - Cabinet Subpanel	1.21
					2.42

This information provided by Automationdirect.com is provided "as is" without any guarantee of any kind. Example programs and schematics are provided by Automationdirect.com to assist others. Automationdirect.com does not guarantee that this example program or schematic is suitable for your particular application, nor do we assume any responsibility for the example program or schematics in your application.

Automation Direct-ZL-CBL50-2P

Label	Description	Location path	From location	To location	Length (m)
CBL-08104D	DRV1 Control Cable	L1-SP<>L1-SP	L1-SP - Cabinet Subpanel	L1-SP - Cabinet Subpanel	2
CBL-08204D	DRV2 Control Cable	L1-SP<>L1-SP	L1-SP - Cabinet Subpanel	L1-SP - Cabinet Subpanel	2
CBL-08304D	DRV3 Control Cable	L1-SP<>L1-SP	L1-SP - Cabinet Subpanel	L1-SP - Cabinet Subpanel	2
CBL-08404D	DRV4 Control Cable	L1-SP<>L1-SP	L1-SP - Cabinet Subpanel	L1-SP - Cabinet Subpanel	2
					8

Murr Elektronik-CD12M-0B-070-C1

Label	Description	Location path	From location	To location	Length (m)
CBL-04304D	Axis 1 Distance Feedback	L1-SP<>L10	L1-SP - Cabinet Subpanel	L10 - Machine	7
CBL-04309D	Axis 2 Distance Feedback	L1-SP<>L10	L1-SP - Cabinet Subpanel	L10 - Machine	7
CBL-04313D	Axis 3 Distance Feedback	L1-SP<>L10	L1-SP - Cabinet Subpanel	L10 - Machine	7
CBL-04317D	Axis 4 Distance Feedback	L1-SP<>L10	L1-SP - Cabinet Subpanel	L10 - Machine	7
					28

Southwire-V30188-1

Label	Description	Location path	From location	To location	Length (m)
CBL-09205D	Panel E-Stop and RSS	L1<>L1	L1 - Cabinet	L1 - Cabinet	1.82
					1.82

Southwire-VNTC-18-6-BK-1

Label	Description	Location path	From location	To location	Length (m)
CBL-09223D	Remote ESS	L10<>L1-SP	L10 - Machine	L1-SP - Cabinet Subpanel	2.74
					2.74

This information provided by Automationdirect.com is provided "as is" without any guarantee of any kind. Example programs and schematics are provided by Automationdirect.com to assist others. Automationdirect.com does not guarantee that this example program or schematic is suitable for your particular application, nor do we assume any responsibility for the example program or schematics in your application.

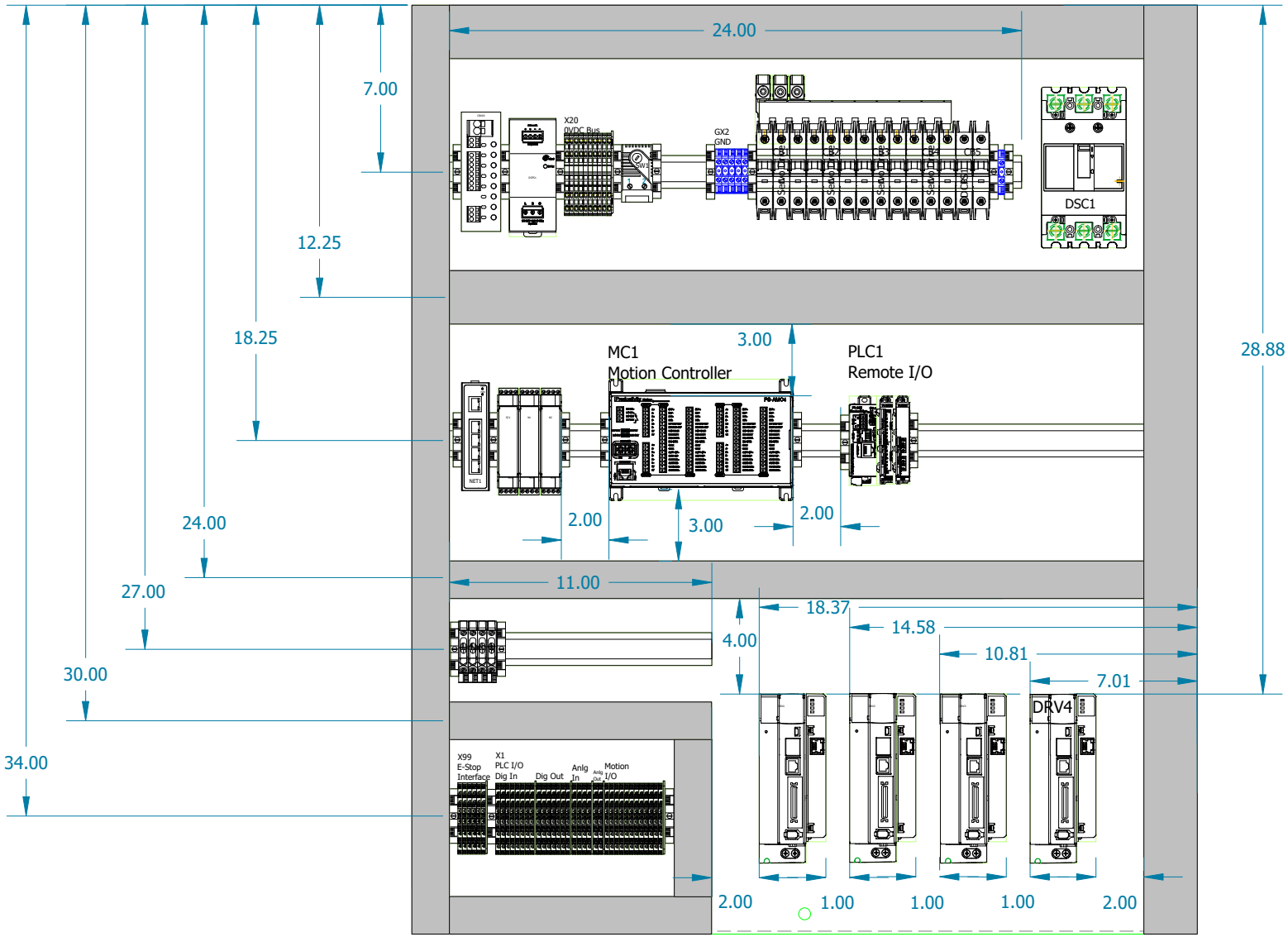

AutomationDirect
3505 Hutchinson Rd
Cumming, GA 30040
(800) 633-0405

Main Subpanel Layout

Dimensions in inches

REV.	DATE	CHANGES
0	6/18/2021	

This information provided by Automationdirect.com is provided "as is" without any guarantee of any kind. Example programs and schematics are provided by Automationdirect.com to assist others. Automationdirect.com does not guarantee that this example program or schematic is suitable for your particular application, nor do we assume any responsibility for the example program or schematics in your application.

REVISION 0

PAGE 11

PROJECT 22102103

LOCATION: L1 L1-SP

Cabinet Subpanel

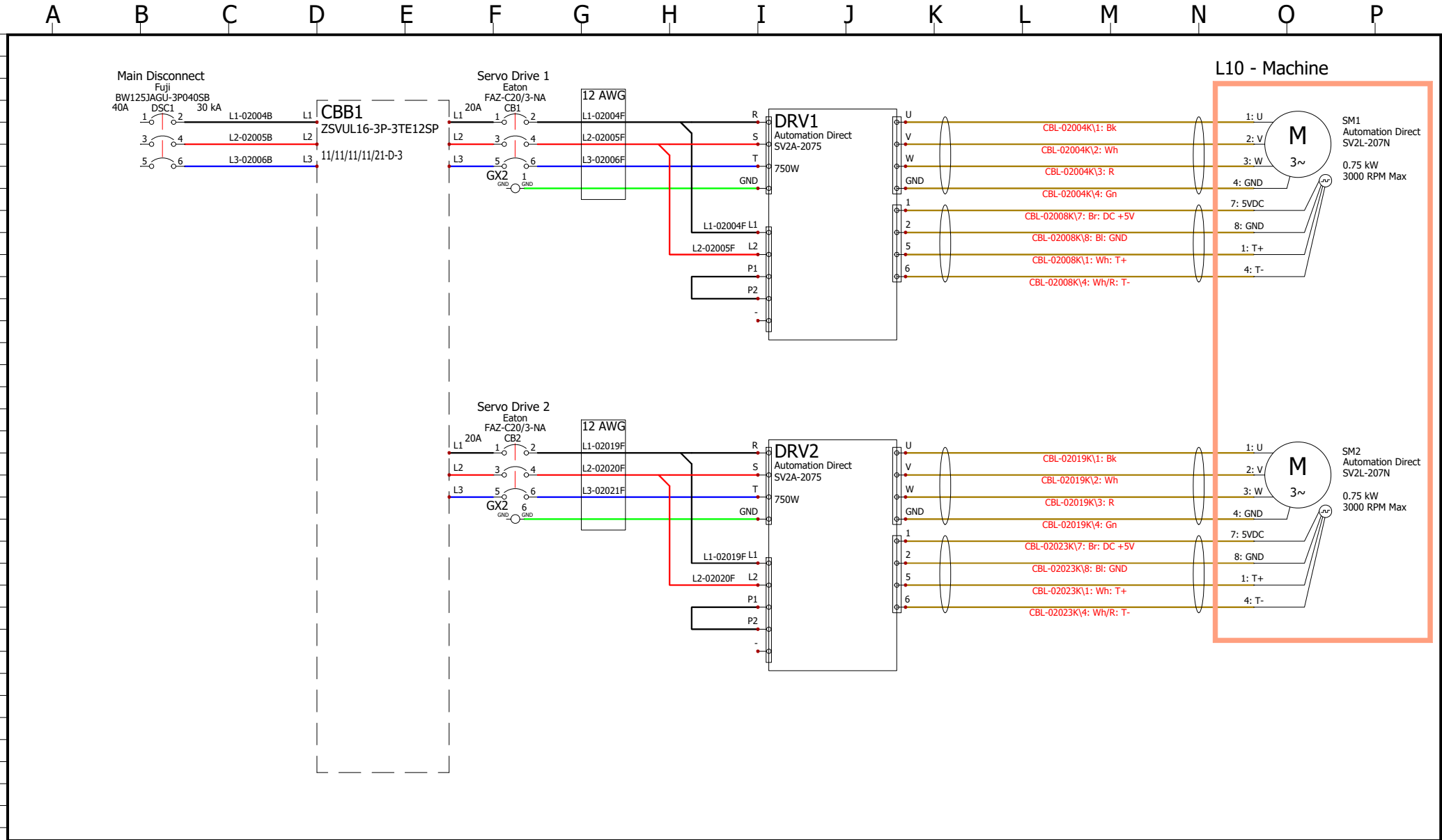

AutomationDirect
3505 Hutchinson Rd
Cumming, GA 30040
(800) 633-0405

AC Power Distribution 1/2

REV.	DATE	NAME	CHANGES
0	6/18/2021	CRK	

This information provided by Automationdirect.com is provided "as is" without any guarantee of any kind. Example programs and schematics are provided by Automationdirect.com to assist others. Automationdirect.com does not guarantee that this example program or schematic is suitable for your particular application, nor do we assume any responsibility for the example program or schematics in your application.

REVISION 0

PAGE 20

PROJECT 22102103

LOCATION: L1 L1-SP

Cabinet Subpanel

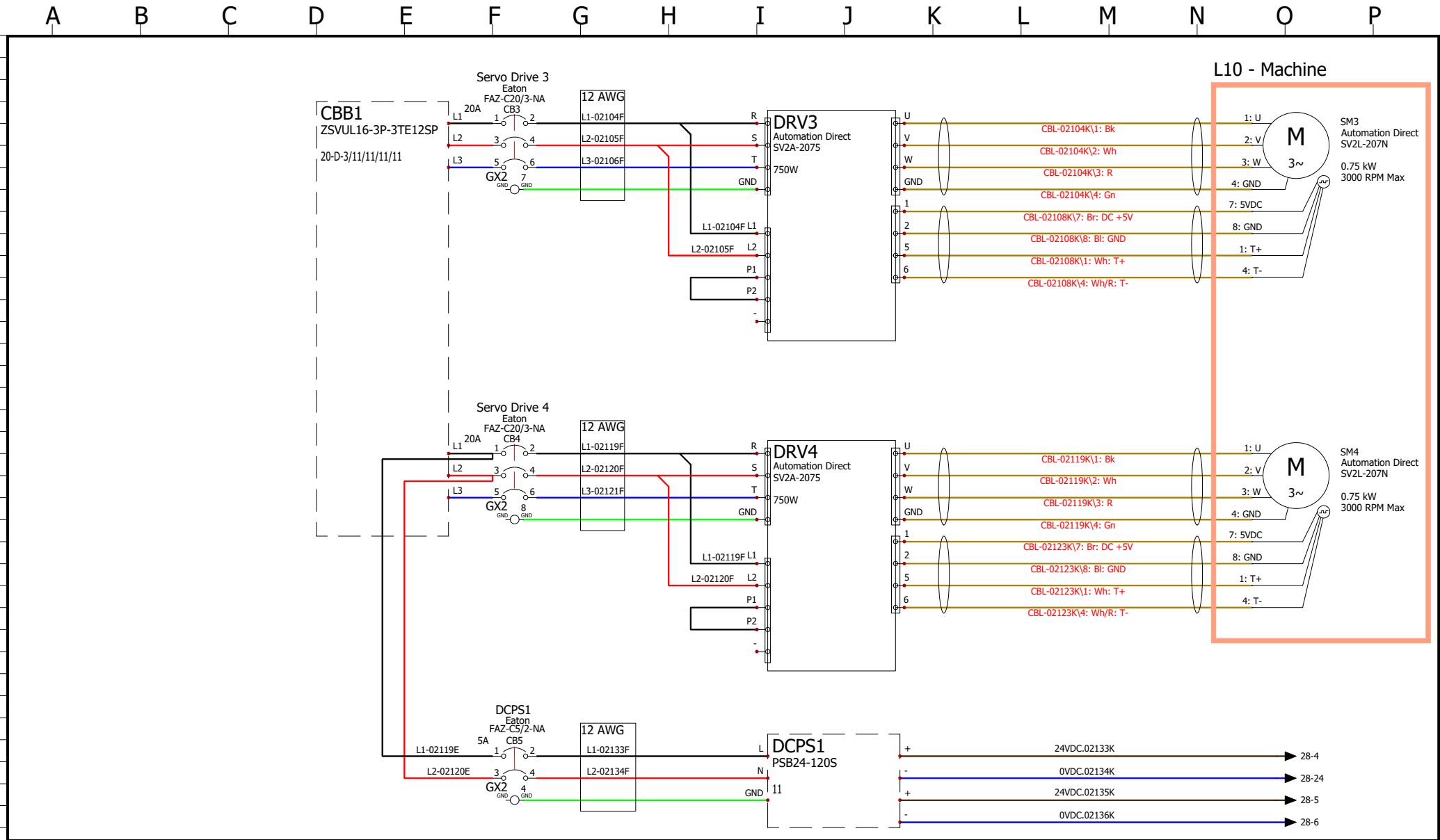

AutomationDirect
3505 Hutchinson Rd
Cumming, GA 30040
(800) 633-0405

AC Power Distribution 2/2

REV.	DATE	NAME	CHANGES
0	6/21/2021	CRK	

This information provided by Automationdirect.com is provided "as is" without any guarantee of any kind. Example programs and schematics are provided by Automationdirect.com to assist others. Automationdirect.com does not guarantee that this example program or schematic is suitable for your particular application, nor do we assume any responsibility for the example program or schematics in your application.

REVISION 0

PAGE 21

PROJECT 22102103

LOCATION: L1 L1-SP

Cabinet Subpanel

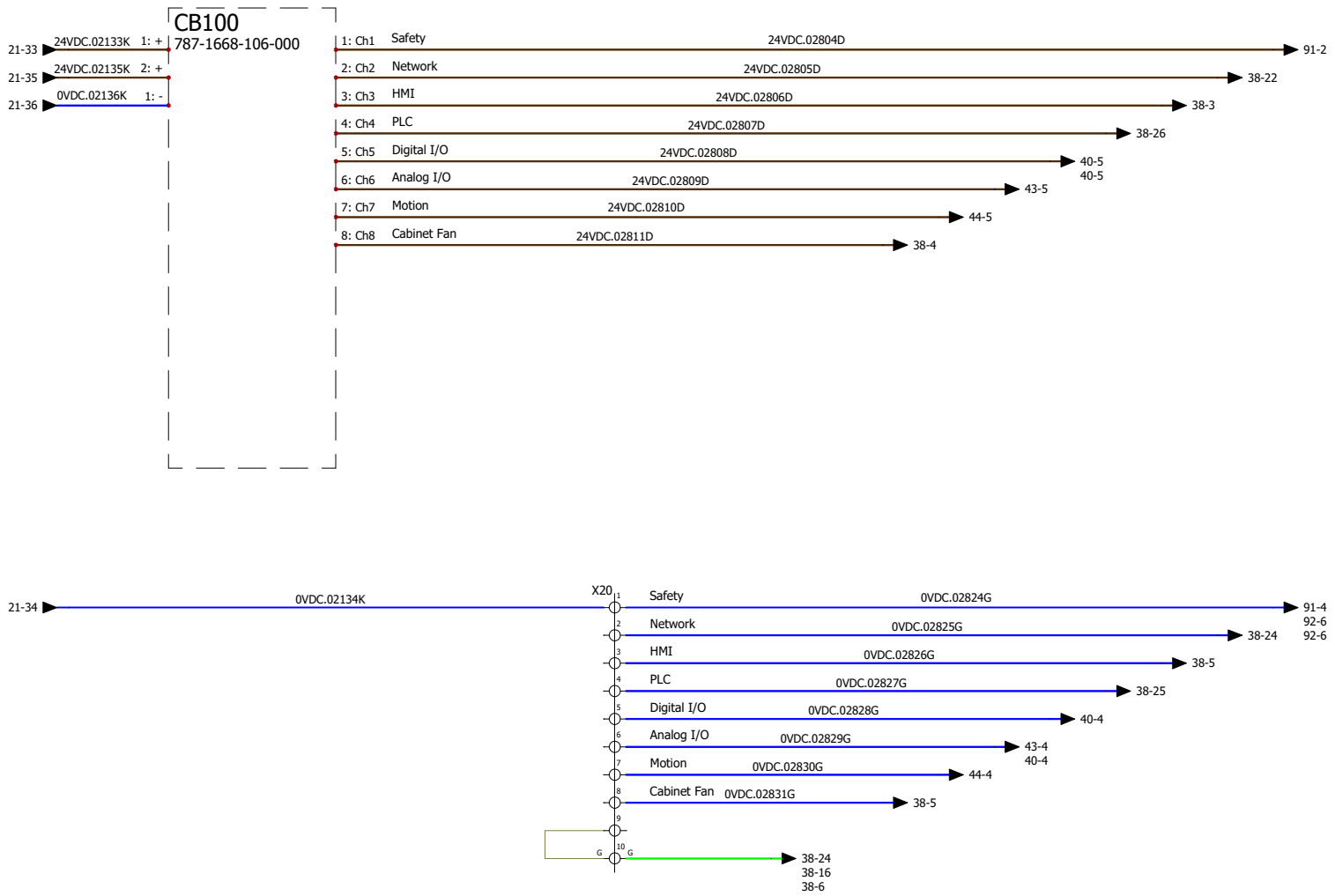

AutomationDirect
3505 Hutchinson Rd
Cumming, GA 30040
(800) 633-0405

DC Power Distribution

REV.	DATE	NAME	CHANGES
0	6/18/2021	CRK	

This information provided by Automationdirect.com is provided "as is" without any guarantee of any kind. Example programs and schematics are provided by Automationdirect.com to assist others. Automationdirect.com does not guarantee that this example program or schematic is suitable for your particular application, nor do we assume any responsibility for the example program or schematics in your application.

REVISION 0

PAGE 28

PROJECT 22102103

LOCATION: L1 L1-SP

Cabinet Subpanel

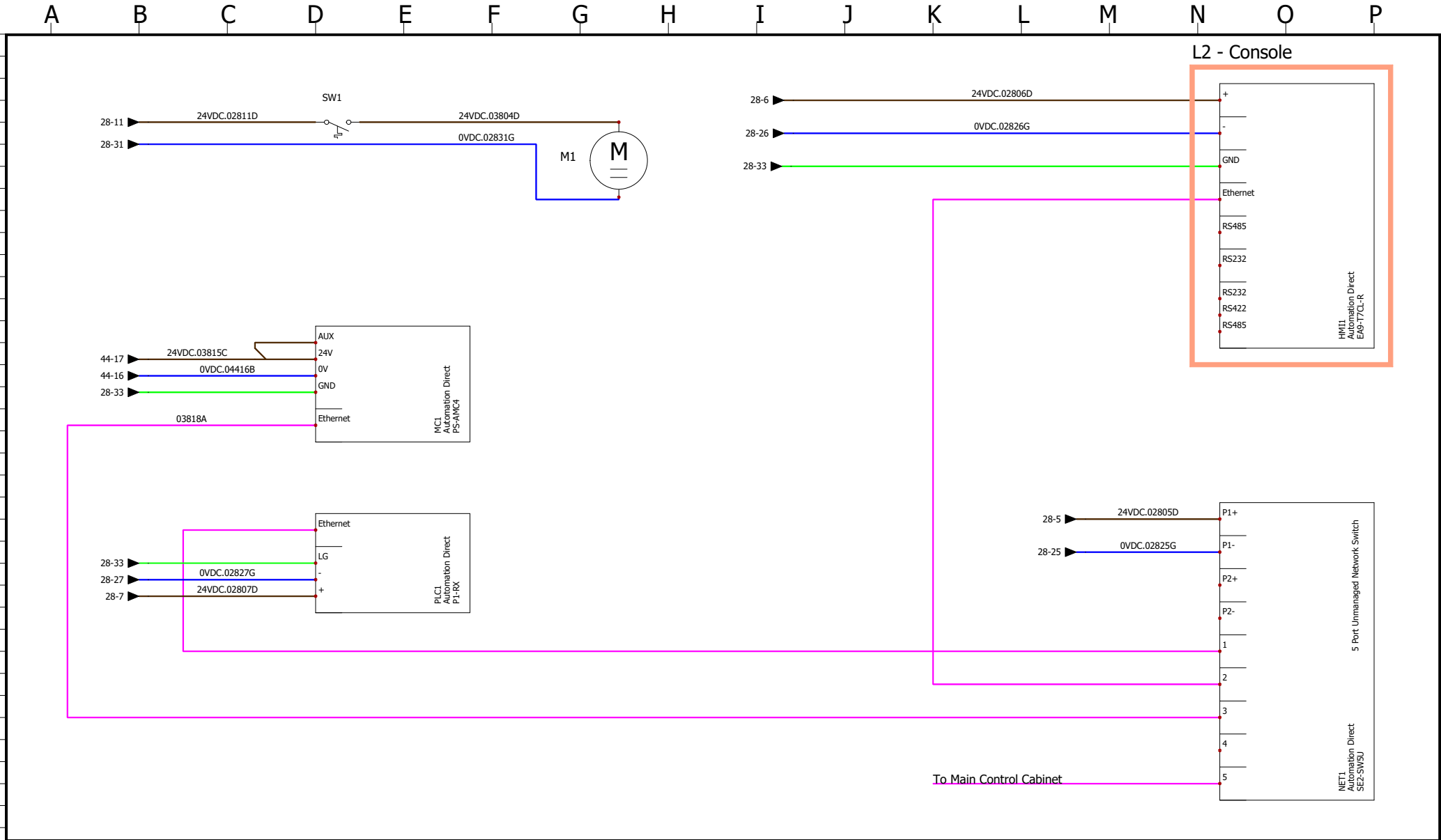

AutomationDirect
3505 Hutchinson Rd
Cumming, GA 30040
(800) 633-0405

PLC Power, Data and Networking

REV.	DATE	NAME	CHANGES
0	6/18/2021	CRK	

This information provided by Automationdirect.com is provided "as is" without any guarantee of any kind. Example programs and schematics are provided by Automationdirect.com to assist others. Automationdirect.com does not guarantee that this example program or schematic is suitable for your particular application, nor do we assume any responsibility for the example program or schematics in your application.

REVISION 0

PAGE 38

PROJECT 22102103

LOCATION: L1 L1-SP

Cabinet Subpanel

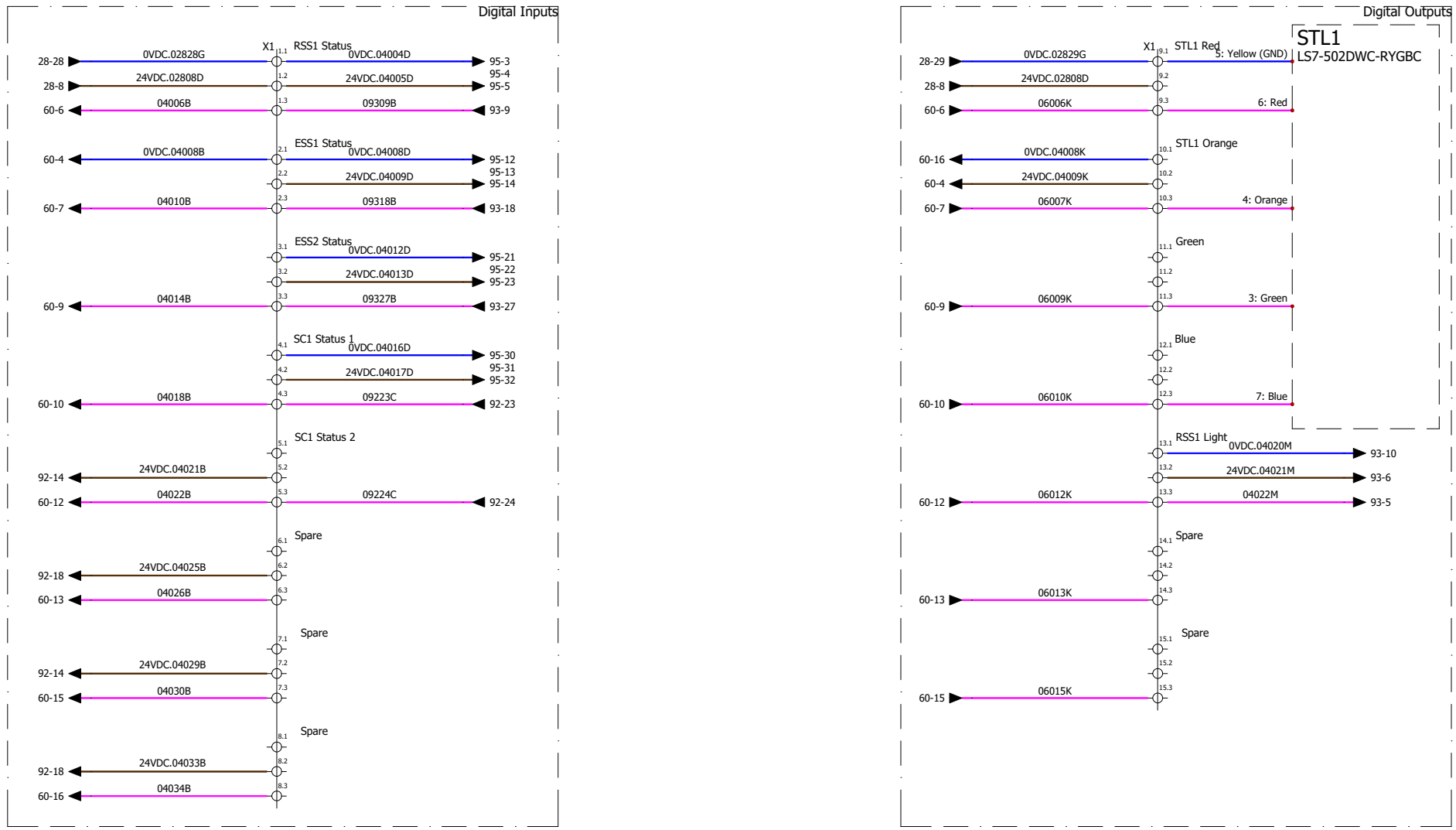

AutomationDirect
3505 Hutchinson Rd
Cumming, GA 30040
(800) 633-0405

Terminal Strip - Digital I/O

REV.	DATE	NAME	CHANGES
0	6/18/2021	CRK	

This information provided by Automationdirect.com is provided "as is" without any guarantee of any kind. Example programs and schematics are provided by Automationdirect.com to assist others. Automationdirect.com does not guarantee that this example program or schematic is suitable for your particular application, nor do we assume any responsibility for the example program or schematics in your application.

REVISION 0

PAGE 40

PROJECT 22102103

LOCATION: L1 L1-SP

Cabinet Subpanel

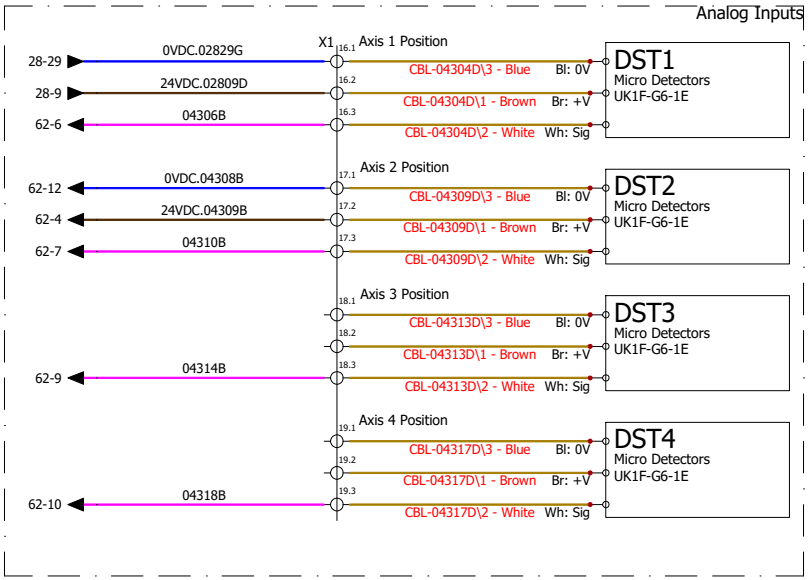

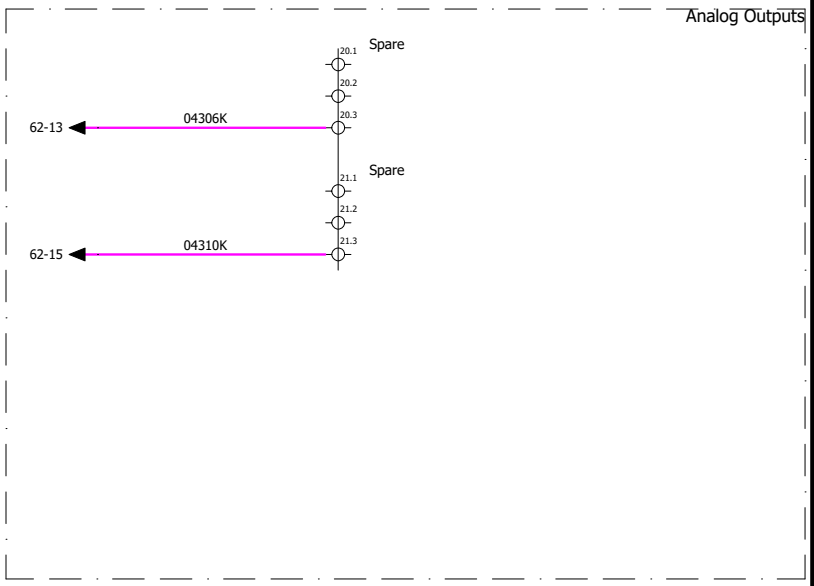

AutomationDirect
3505 Hutchinson Rd
Cumming, GA 30040
(800) 633-0405

Terminal Strip - Analog I/O

REV.	DATE	NAME	CHANGES
0	6/18/2021	CRK	

This information provided by Automationdirect.com is provided "as is" without any guarantee of any kind. Example programs and schematics are provided by Automationdirect.com to assist others. Automationdirect.com does not guarantee that this example program or schematic is suitable for your particular application, nor do we assume any responsibility for the example program or schematics in your application.

REVISION 0

PAGE 43

PROJECT 22102103

LOCATION: L1 L1-SP

Cabinet Subpanel

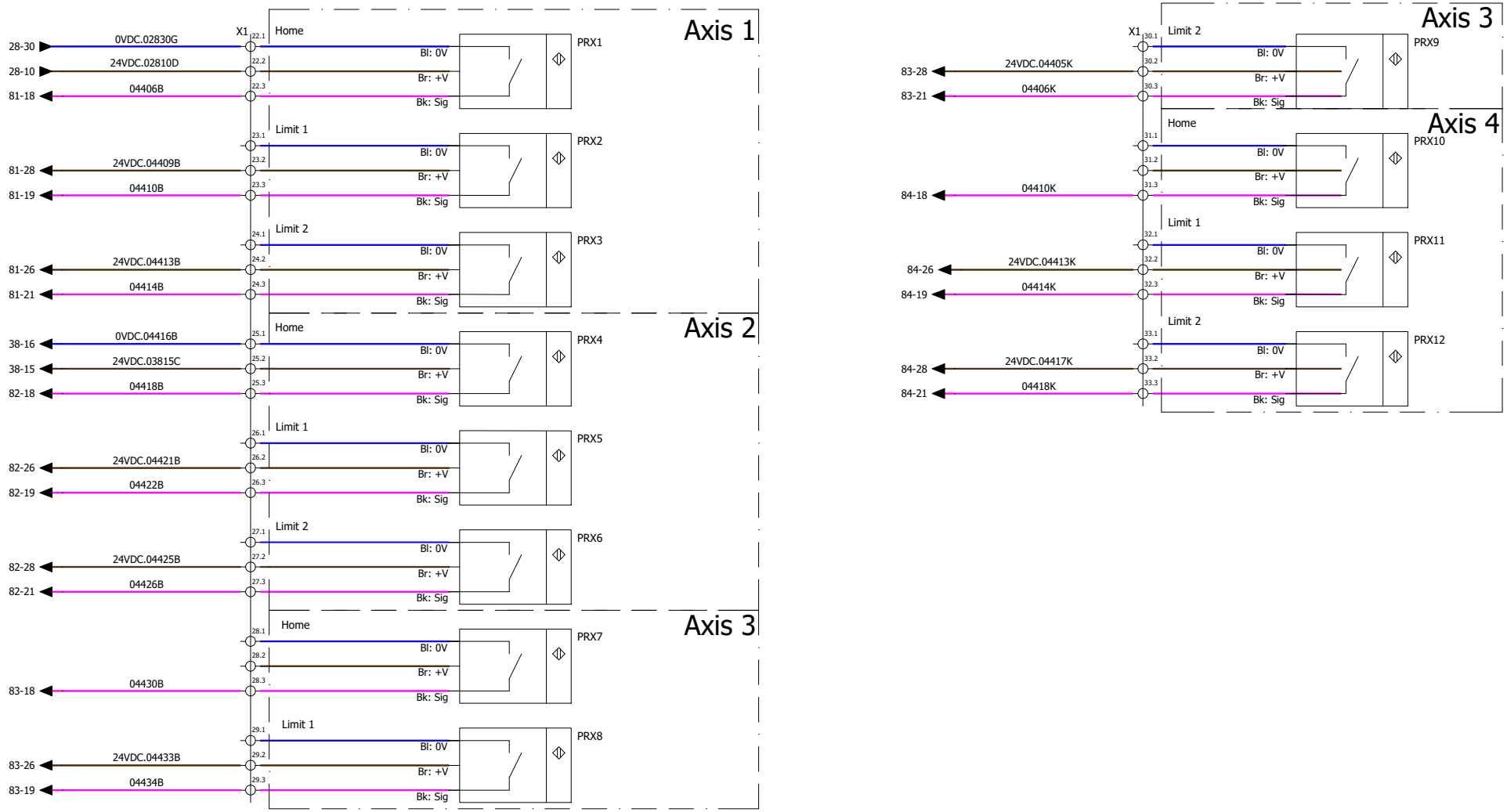

AutomationDirect
3505 Hutchinson Rd
Cumming, GA 30040
(800) 633-0405

Terminal Strip - Motion

REV.	DATE	NAME	CHANGES
0	7/23/2021	CRK	

This information provided by Automationdirect.com is provided "as is" without any guarantee of any kind. Example programs and schematics are provided by Automationdirect.com to assist others. Automationdirect.com does not guarantee that this example program or schematic is suitable for your particular application, nor do we assume any responsibility for the example program or schematics in your application.

REVISION 0

PAGE 44

PROJECT 22102103

LOCATION: L1 L1-SP

Cabinet Subpanel

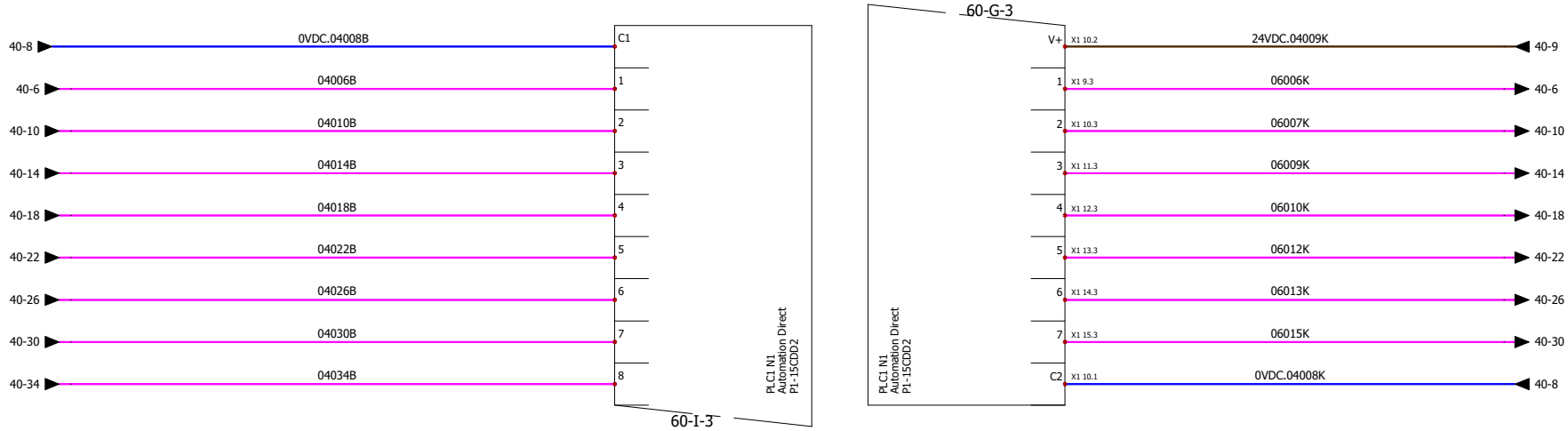

AutomationDirect
3505 Hutchinson Rd
Cumming, GA 30040
(800) 633-0405

PLC - Digital I/O

REV.	DATE	NAME	CHANGES
0	6/18/2021	CRK	

This information provided by Automationdirect.com is provided "as is" without any guarantee of any kind. Example programs and schematics are provided by Automationdirect.com to assist others. Automationdirect.com does not guarantee that this example program or schematic is suitable for your particular application, nor do we assume any responsibility for the example program or schematics in your application.

REVISION 0

PAGE 60

PROJECT 22102103

LOCATION: L1 L1-SP

Cabinet Subpanel

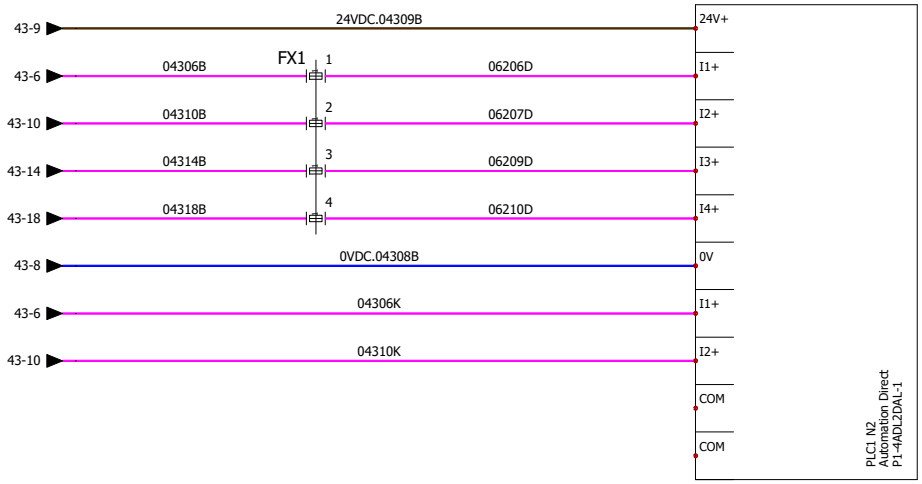

AutomationDirect
3505 Hutchinson Rd
Cumming, GA 30040
(800) 633-0405

PLC - Analog I/O

REV.	DATE	NAME	CHANGES
0	6/18/2021	CRK	

This information provided by Automationdirect.com is provided "as is" without any guarantee of any kind. Example programs and schematics are provided by Automationdirect.com to assist others. Automationdirect.com does not guarantee that this example program or schematic is suitable for your particular application, nor do we assume any responsibility for the example program or schematics in your application.

REVISION 0

PAGE 62

PROJECT 22102103

LOCATION: L1 L1-SP

Cabinet Subpanel

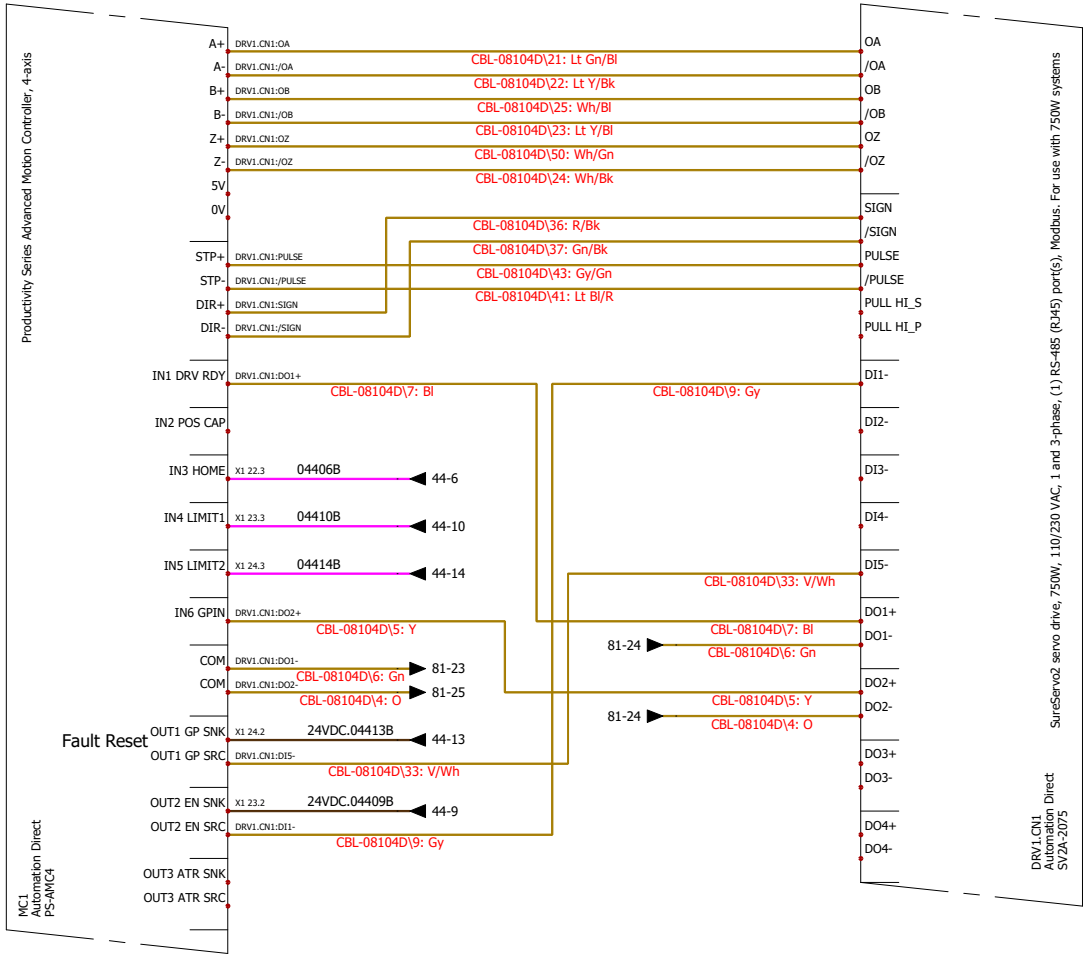

Heat-shrink and secure spare conductors to avoid unintended behavior

AutomationDirect
3505 Hutchinson Rd
Cumming, GA 30040
(800) 633-0405

AMC - Motion Controller 1/4

REV.	DATE	NAME	CHANGES
0	6/30/2021	CRK	

This information provided by Automationdirect.com is provided "as is" without any guarantee of any kind. Example programs and schematics are provided by Automationdirect.com to assist others. Automationdirect.com does not guarantee that this example program or schematic is suitable for your particular application, nor do we assume any responsibility for the example program or schematics in your application.

REVISION 0

PROJECT 22102103

LOCATION: L1 L1-SP

Cabinet Subpanel

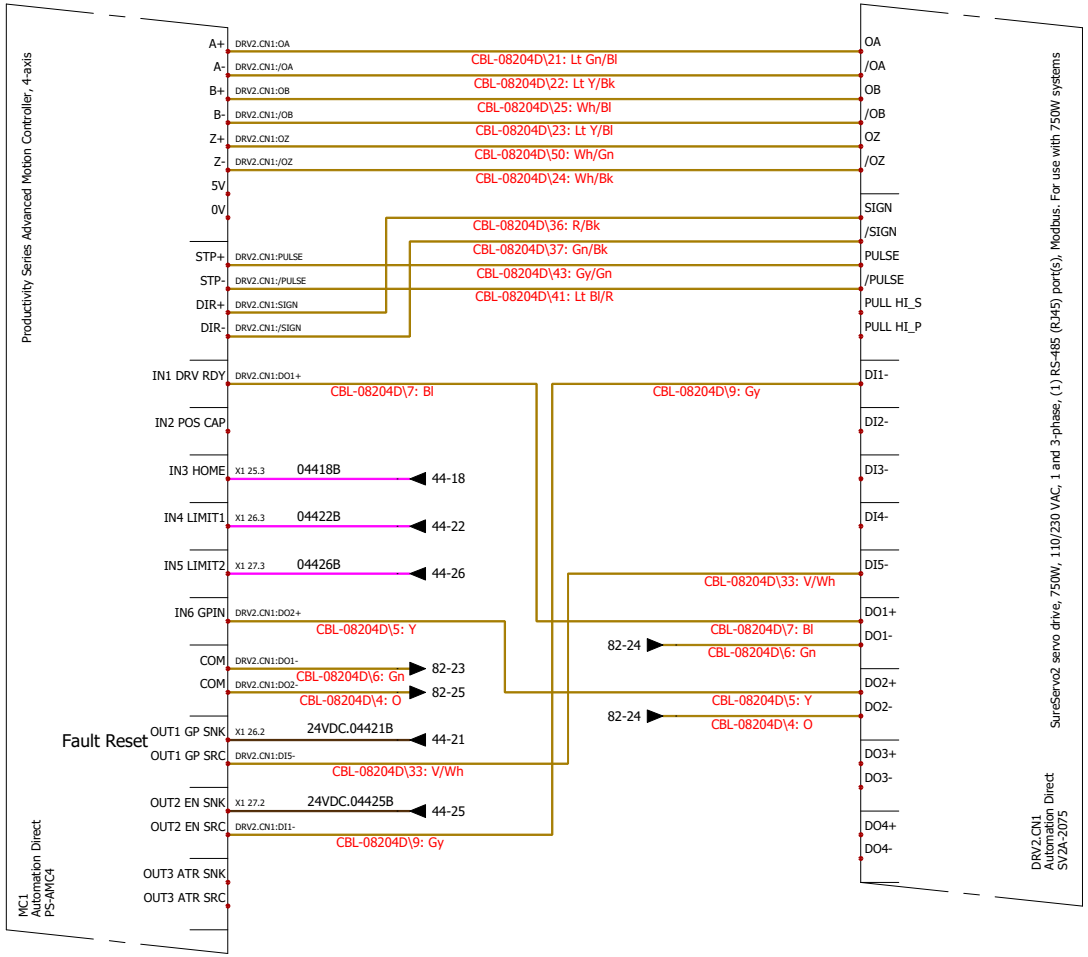

Heat-shrink and secure spare conductors to avoid unintended behavior

AutomationDirect
3505 Hutchinson Rd
Cumming, GA 30040
(800) 633-0405

AMC - Motion Controller 2/4

REV.	DATE	NAME	CHANGES
0	7/27/2021	CRK	

This information provided by Automationdirect.com is provided "as is" without any guarantee of any kind. Example programs and schematics are provided by Automationdirect.com to assist others. Automationdirect.com does not guarantee that this example program or schematic is suitable for your particular application, nor do we assume any responsibility for the example program or schematics in your application.

PROJECT 22102103

LOCATION: L1 L1-SP

Cabinet Subpanel

REVISION 0

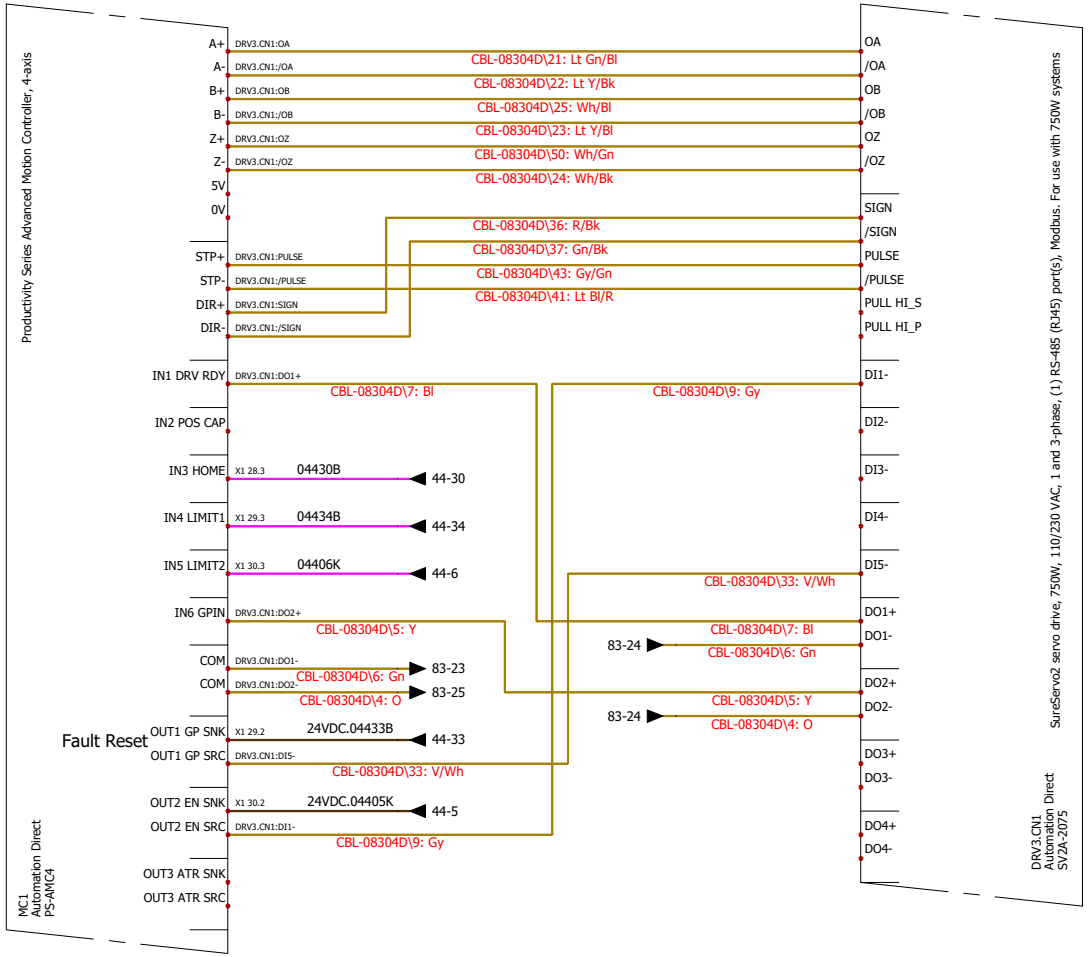

Heat-shrink and secure spare conductors to avoid unintended behavior

AutomationDirect
3505 Hutchinson Rd
Cumming, GA 30040
(800) 633-0405

AMC - Motion Controller 3/4

REV.	DATE	NAME	CHANGES
0	7/28/2021	CRK	

This information provided by Automationdirect.com is provided "as is" without any guarantee of any kind. Example programs and schematics are provided by Automationdirect.com to assist others. Automationdirect.com does not guarantee that this example program or schematic is suitable for your particular application, nor do we assume any responsibility for the example program or schematics in your application.

REVISION 0

PROJECT 22102103

LOCATION: L1 L1-SP

Cabinet Subpanel

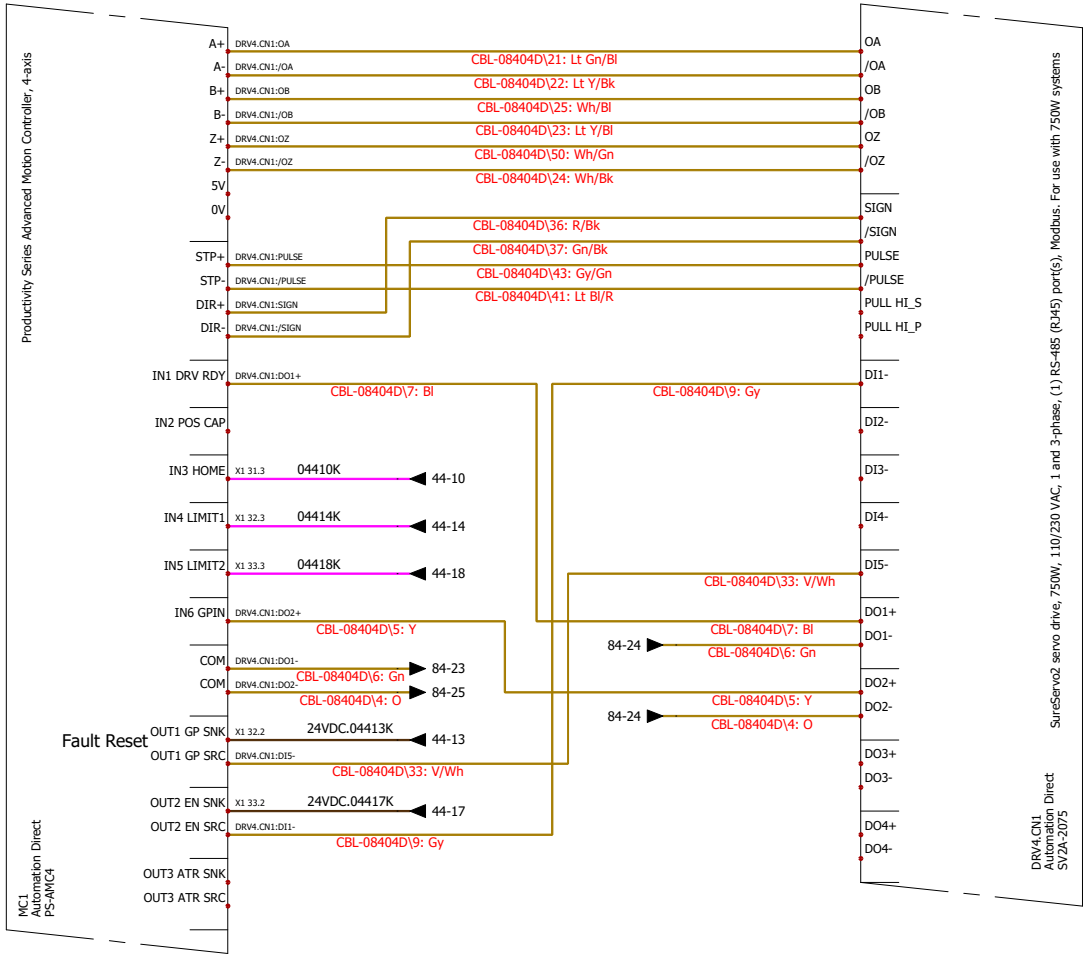

Heat-shrink and secure spare conductors to avoid unintended behavior

AutomationDirect
3505 Hutchinson Rd
Cumming, GA 30040
(800) 633-0405

AMC - Motion Controller 4/4

REV.	DATE	NAME	CHANGES
0	7/28/2021	CRK	

This information provided by Automationdirect.com is provided "as is" without any guarantee of any kind. Example programs and schematics are provided by Automationdirect.com to assist others. Automationdirect.com does not guarantee that this example program or schematic is suitable for your particular application, nor do we assume any responsibility for the example program or schematics in your application.

PROJECT 22102103

LOCATION: L1 L1-SP

Cabinet Subpanel

REVISION 0

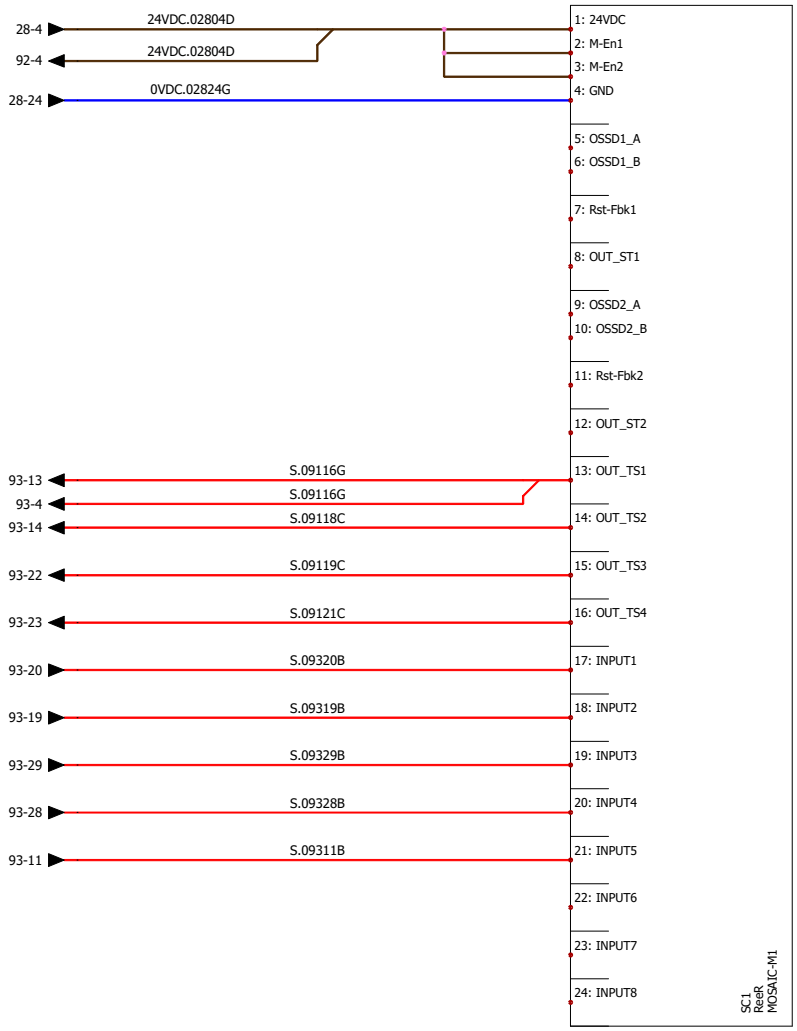

AutomationDirect
3505 Hutchinson Rd
Cumming, GA 30040
(800) 633-0405

Safety Controller

REV.	DATE	NAME	CHANGES
0	6/18/2021	CRK	

This information provided by Automationdirect.com is provided "as is" without any guarantee of any kind. Example programs and schematics are provided by Automationdirect.com to assist others. Automationdirect.com does not guarantee that this example program or schematic is suitable for your particular application, nor do we assume any responsibility for the example program or schematics in your application.

REVISION 0

PAGE 91

PROJECT 22102103

LOCATION: L1 L1-SP

Cabinet Subpanel

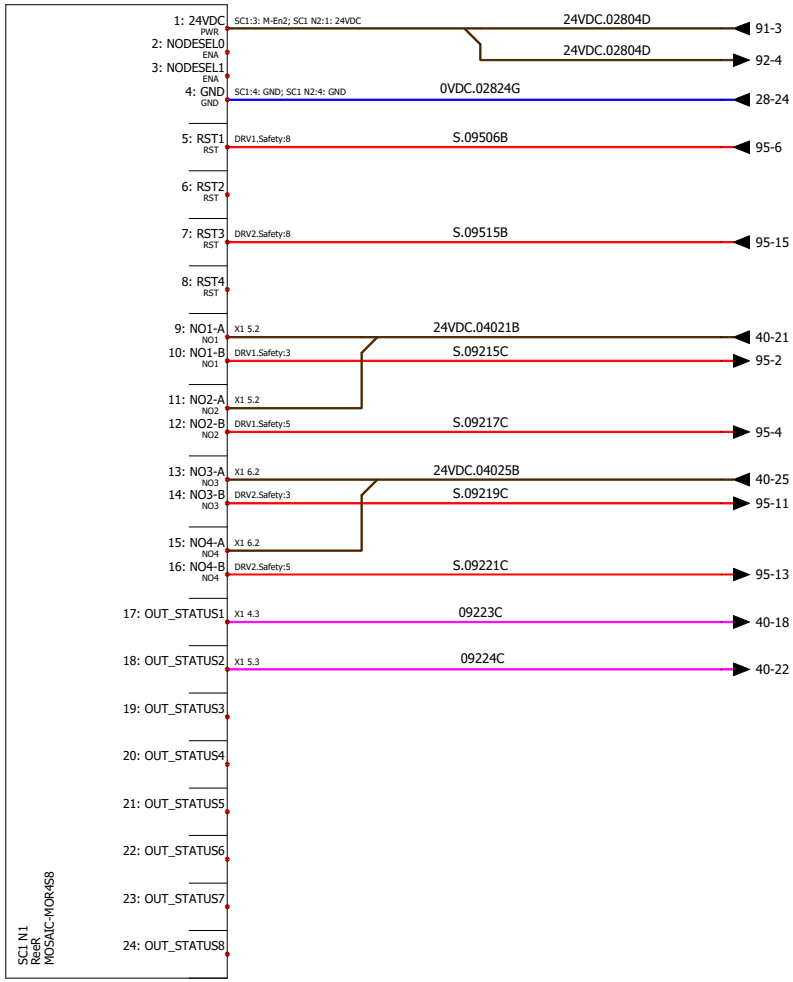

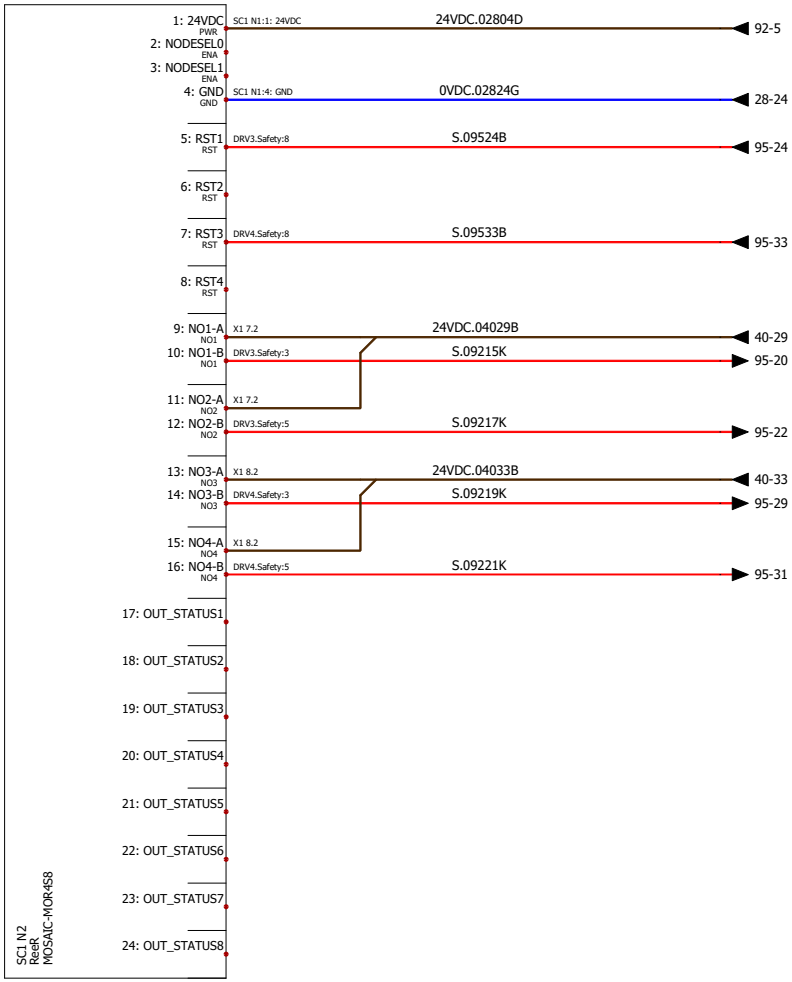

AutomationDirect
3505 Hutchinson Rd
Cumming, GA 30040
(800) 633-0405

Safety Controller Expansion Modules

REV.	DATE	NAME	CHANGES
0	6/22/2021	CRK	

This information provided by Automationdirect.com is provided "as is" without any guarantee of any kind. Example programs and schematics are provided by Automationdirect.com to assist others. Automationdirect.com does not guarantee that this example program or schematic is suitable for your particular application, nor do we assume any responsibility for the example program or schematics in your application.

REVISION 0

PAGE 92

PROJECT 22102103

LOCATION: L1 L1-SP

Cabinet Subpanel

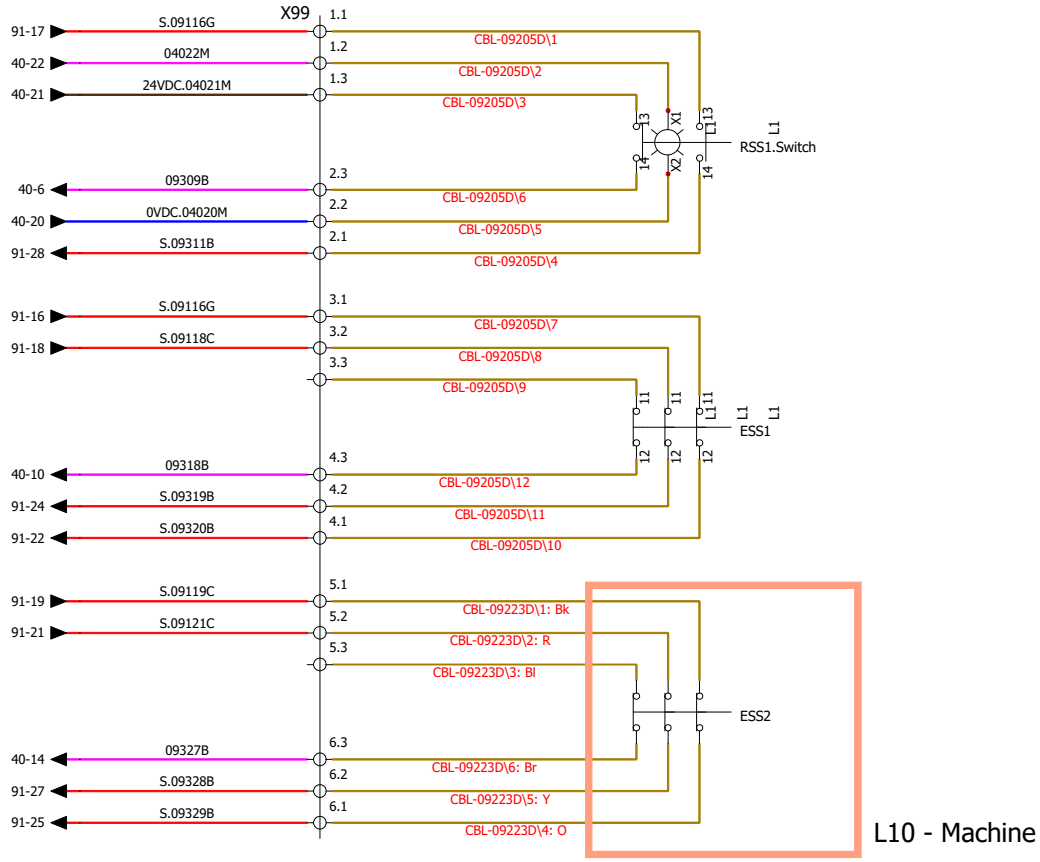

AutomationDirect
3505 Hutchinson Rd
Cumming, GA 30040
(800) 633-0405

E-Stop Stations

REV.	DATE	NAME	CHANGES
0	6/18/2021	CRK	

This information provided by Automationdirect.com is provided "as is" without any guarantee of any kind. Example programs and schematics are provided by Automationdirect.com to assist others. Automationdirect.com does not guarantee that this example program or schematic is suitable for your particular application, nor do we assume any responsibility for the example program or schematics in your application.

REVISION 0

PAGE 93

PROJECT 22102103

LOCATION: L1 L1-SP

Cabinet Subpanel

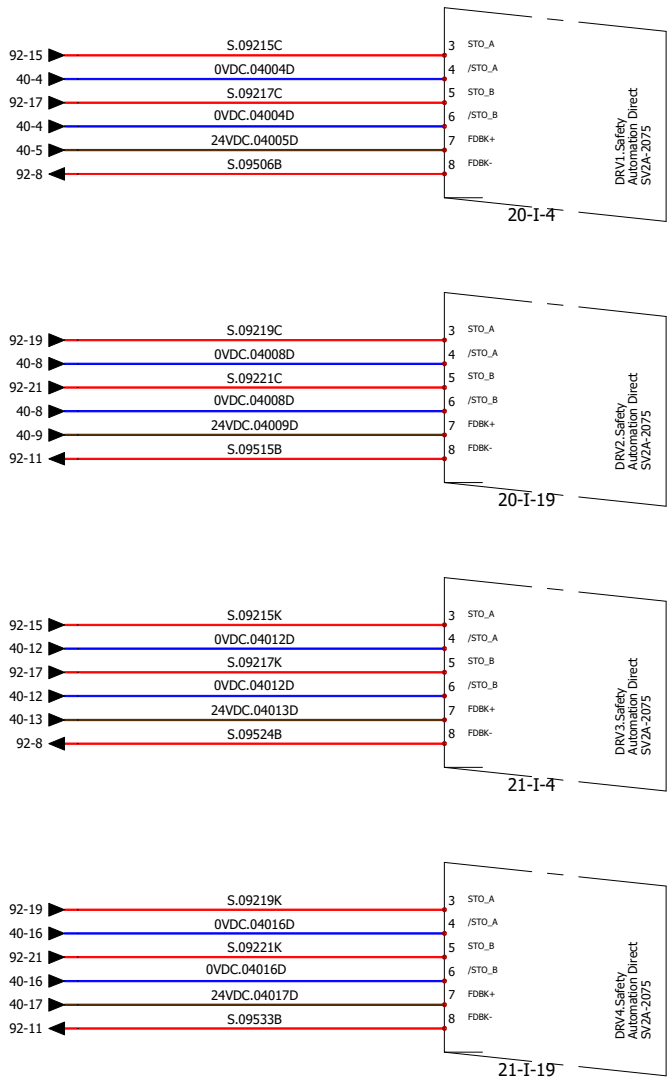

AutomationDirect
3505 Hutchinson Rd
Cumming, GA 30040
(800) 633-0405

Servo STO Interfaces

REV.	DATE	NAME	CHANGES
0	7/12/2021	CRK	

This information provided by Automationdirect.com is provided "as is" without any guarantee of any kind. Example programs and schematics are provided by Automationdirect.com to assist others. Automationdirect.com does not guarantee that this example program or schematic is suitable for your particular application, nor do we assume any responsibility for the example program or schematics in your application.

REVISION 0

PAGE 95

PROJECT 22102103

LOCATION: L1 L1-SP

Cabinet Subpanel

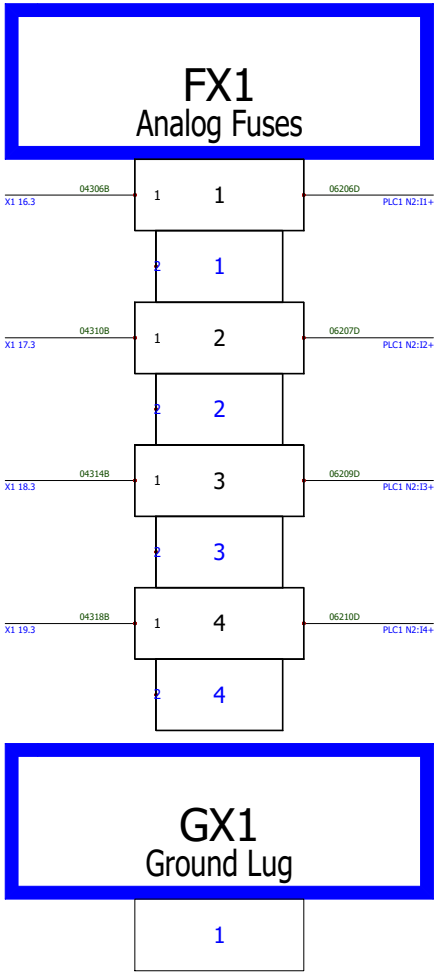

AutomationDirect
3505 Hutchinson Rd
Cumming, GA 30040
(800) 633-0405

FX1-GX1

REV.	DATE	CHANGES
0	8/17/2021	

REVISION 0

PAGE 100

PROJECT 22102103

LOCATION: L1 L1-SP

Cabinet Subpanel

This information provided by Automationdirect.com is provided "as is" without any guarantee of any kind. Example programs and schematics are provided by Automationdirect.com to assist others. Automationdirect.com does not guarantee that this example program or schematic is suitable for your particular application, nor do we assume any responsibility for the example program or schematics in your application.

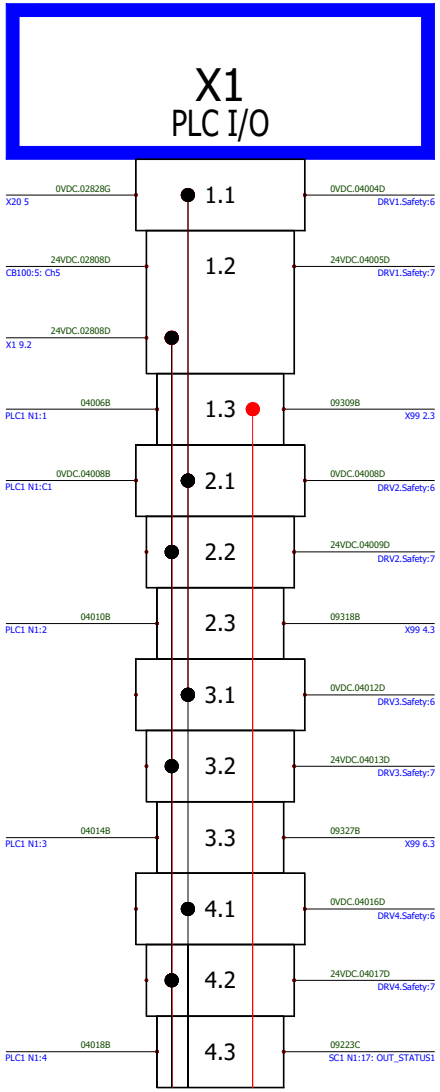

AutomationDirect
3505 Hutchinson Rd
Cumming, GA 30040
(800) 633-0405

X1-PLC I/O(1/9)

REV.	DATE	CHANGES
0	8/17/2021	

This information provided by Automationdirect.com is provided "as is" without any guarantee of any kind. Example programs and schematics are provided by Automationdirect.com to assist others. Automationdirect.com does not guarantee that this example program or schematic is suitable for your particular application, nor do we assume any responsibility for the example program or schematics in your application.

REVISION 0

PAGE 101

PROJECT 22102103

LOCATION: L1 L1-SP

Cabinet Subpanel

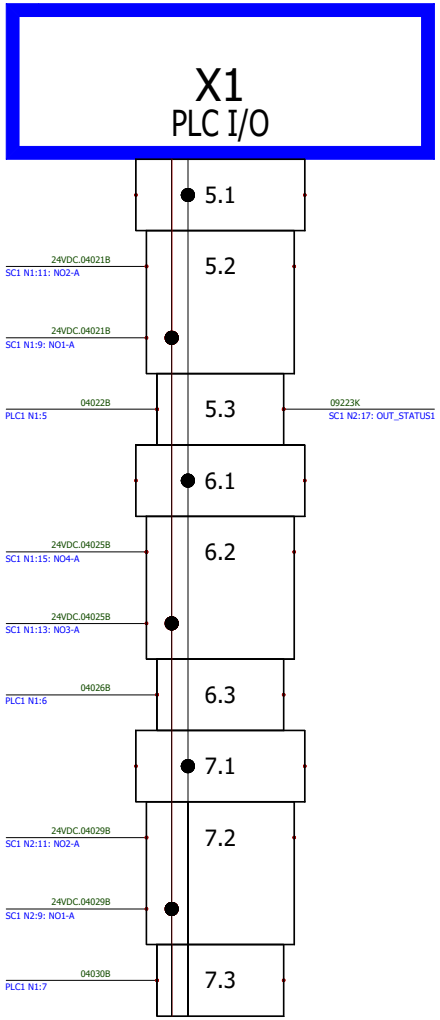

AutomationDirect
3505 Hutchinson Rd
Cumming, GA 30040
(800) 633-0405

X1-PLC I/O(2/9)

REV.	DATE	CHANGES
0	8/17/2021	

This information provided by Automationdirect.com is provided "as is" without any guarantee of any kind. Example programs and schematics are provided by Automationdirect.com to assist others. Automationdirect.com does not guarantee that this example program or schematic is suitable for your particular application, nor do we assume any responsibility for the example program or schematics in your application.

REVISION 0

PAGE 102

PROJECT 22102103

LOCATION: L1 L1-SP

Cabinet Subpanel

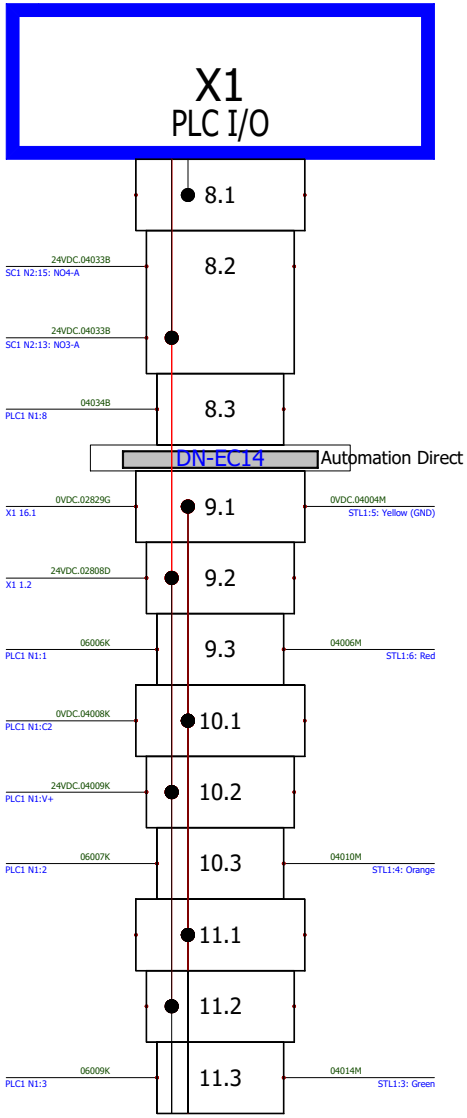

AutomationDirect
3505 Hutchinson Rd
Cumming, GA 30040
(800) 633-0405

X1-PLC I/O(3/9)

REV.	DATE	CHANGES
0	8/17/2021	

This information provided by Automationdirect.com is provided "as is" without any guarantee of any kind. Example programs and schematics are provided by Automationdirect.com to assist others. Automationdirect.com does not guarantee that this example program or schematic is suitable for your particular application, nor do we assume any responsibility for the example program or schematics in your application.

REVISION 0

PAGE 103

PROJECT 22102103

LOCATION: L1 L1-SP

Cabinet Subpanel

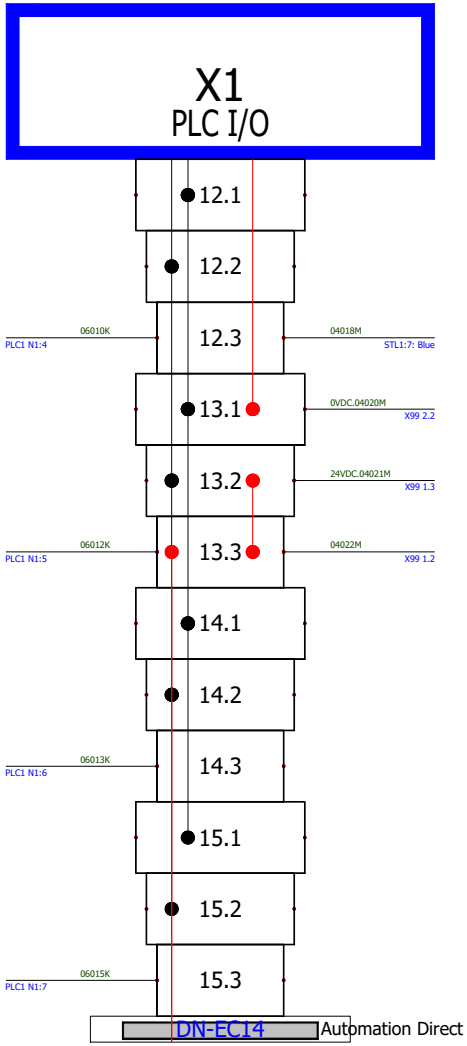

AutomationDirect
3505 Hutchinson Rd
Cumming, GA 30040
(800) 633-0405

X1-PLC I/O(4/9)

REV.	DATE	CHANGES
0	8/17/2021	

This information provided by Automationdirect.com is provided "as is" without any guarantee of any kind. Example programs and schematics are provided by Automationdirect.com to assist others. Automationdirect.com does not guarantee that this example program or schematic is suitable for your particular application, nor do we assume any responsibility for the example program or schematics in your application.

REVISION 0

PAGE 104

PROJECT 22102103

LOCATION: L1 L1-SP

Cabinet Subpanel

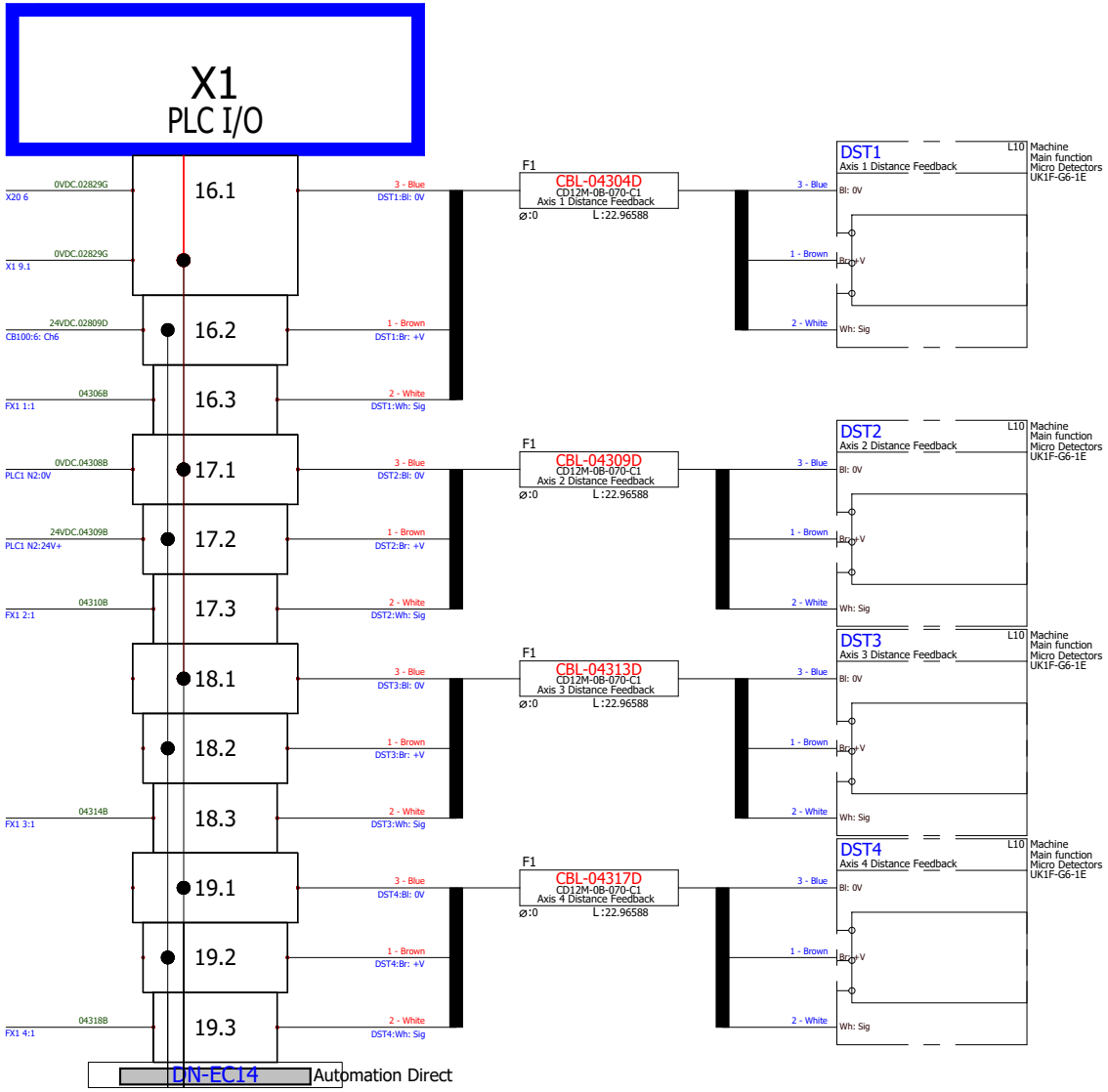

AutomationDirect
3505 Hutchinson Rd
Cumming, GA 30040
(800) 633-0405

X1-PLC I/O(5/9)

REV.	DATE	CHANGES
0	8/17/2021	

This information provided by Automationdirect.com is provided "as is" without any guarantee of any kind. Example programs and schematics are provided by Automationdirect.com to assist others. Automationdirect.com does not guarantee that this example program or schematic is suitable for your particular application, nor do we assume any responsibility for the example program or schematics in your application.

REVISION 0

PAGE 105

PROJECT 22102103

LOCATION: L1 L1-SP

Cabinet Subpanel

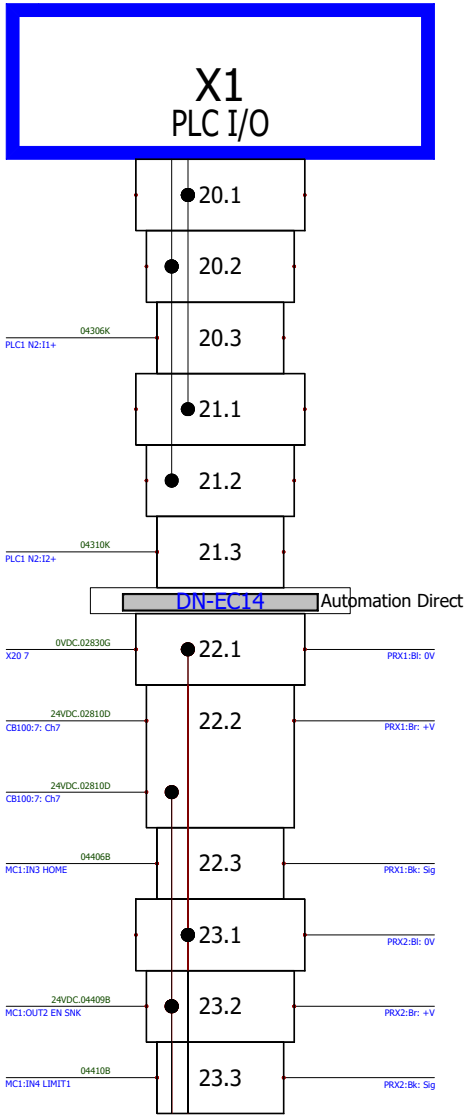

AutomationDirect
3505 Hutchinson Rd
Cumming, GA 30040
(800) 633-0405

X1-PLC I/O(6/9)

REV.	DATE	CHANGES
0	8/17/2021	

This information provided by Automationdirect.com is provided "as is" without any guarantee of any kind. Example programs and schematics are provided by Automationdirect.com to assist others. Automationdirect.com does not guarantee that this example program or schematic is suitable for your particular application, nor do we assume any responsibility for the example program or schematics in your application.

REVISION 0

PAGE 106

PROJECT 22102103

LOCATION: L1 L1-SP

Cabinet Subpanel

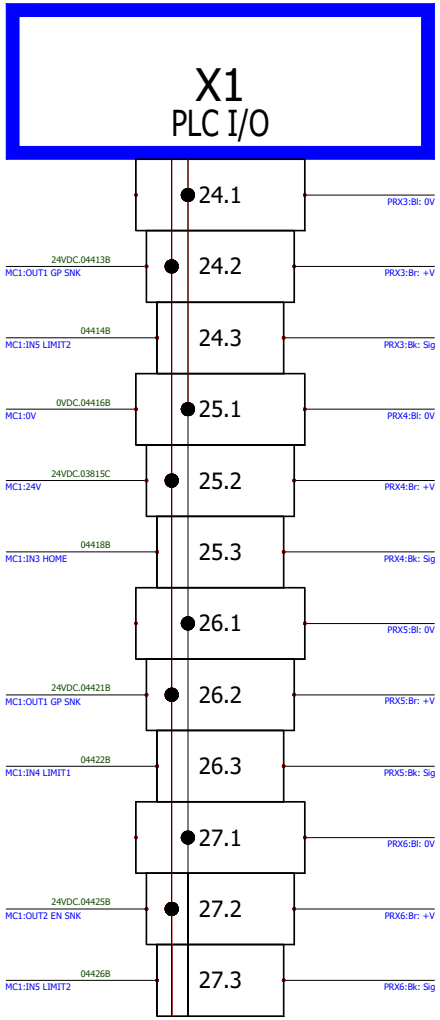

AutomationDirect
3505 Hutchinson Rd
Cumming, GA 30040
(800) 633-0405

X1-PLC I/O(7/9)

REV.	DATE	CHANGES
0	8/17/2021	

This information provided by Automationdirect.com is provided "as is" without any guarantee of any kind. Example programs and schematics are provided by Automationdirect.com to assist others. Automationdirect.com does not guarantee that this example program or schematic is suitable for your particular application, nor do we assume any responsibility for the example program or schematics in your application.

REVISION 0

PAGE 107

PROJECT 22102103

LOCATION: L1 L1-SP

Cabinet Subpanel

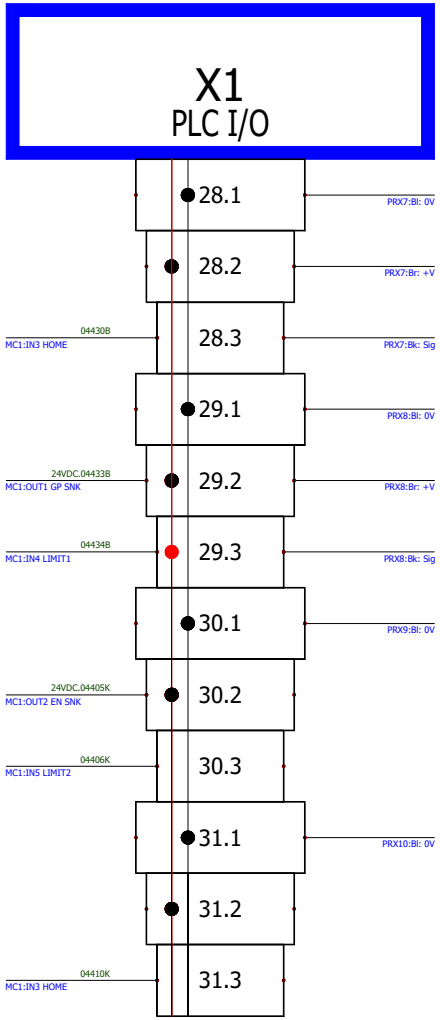

AutomationDirect
3505 Hutchinson Rd
Cumming, GA 30040
(800) 633-0405

X1-PLC I/O(8/9)

REV.	DATE	CHANGES
0	8/17/2021	

This information provided by Automationdirect.com is provided "as is" without any guarantee of any kind. Example programs and schematics are provided by Automationdirect.com to assist others. Automationdirect.com does not guarantee that this example program or schematic is suitable for your particular application, nor do we assume any responsibility for the example program or schematics in your application.

REVISION 0

PAGE 108

PROJECT 22102103

LOCATION: L1 L1-SP

Cabinet Subpanel

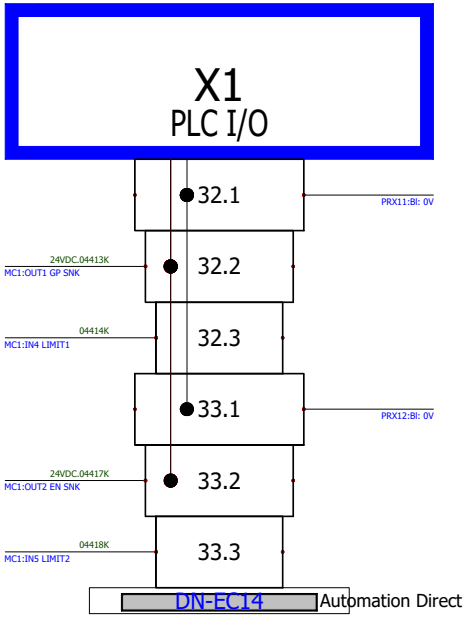

AutomationDirect
3505 Hutchinson Rd
Cumming, GA 30040
(800) 633-0405

X1-PLC I/O(9/9)

REV.	DATE	CHANGES
0	8/17/2021	

This information provided by Automationdirect.com is provided "as is" without any guarantee of any kind. Example programs and schematics are provided by Automationdirect.com to assist others. Automationdirect.com does not guarantee that this example program or schematic is suitable for your particular application, nor do we assume any responsibility for the example program or schematics in your application.

REVISION 0

PAGE 109

PROJECT 22102103

LOCATION: L1 L1-SP

Cabinet Subpanel

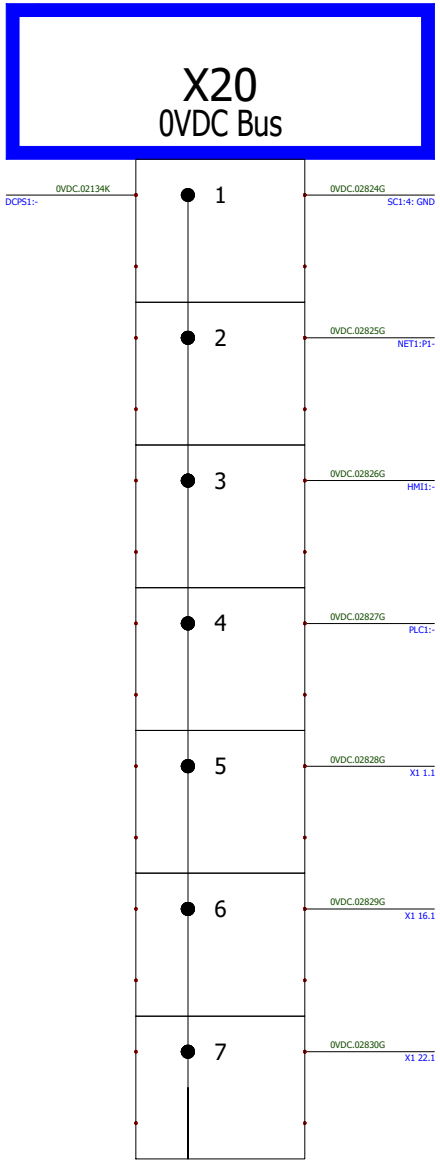

AutomationDirect
3505 Hutchinson Rd
Cumming, GA 30040
(800) 633-0405

X20-0VDC Bus(1/2)

REV.	DATE	CHANGES
0	8/17/2021	

This information provided by Automationdirect.com is provided "as is" without any guarantee of any kind. Example programs and schematics are provided by Automationdirect.com to assist others. Automationdirect.com does not guarantee that this example program or schematic is suitable for your particular application, nor do we assume any responsibility for the example program or schematics in your application.

REVISION 0

PAGE 110

PROJECT 22102103

LOCATION: L1 L1-SP

Cabinet Subpanel

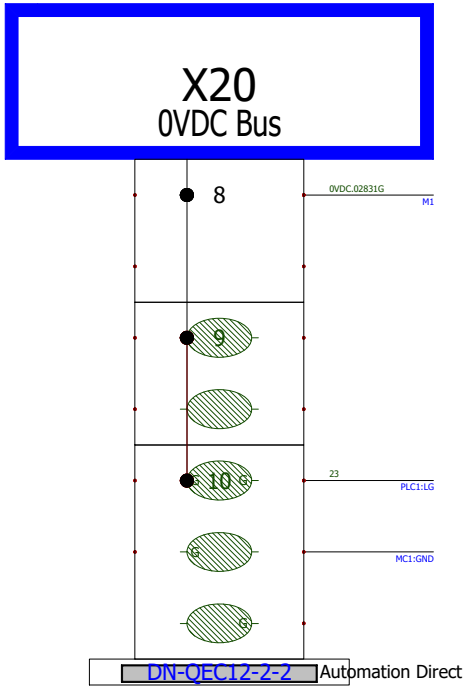

AutomationDirect
3505 Hutchinson Rd
Cumming, GA 30040
(800) 633-0405

X20-0VDC Bus(2/2)

REV.	DATE	CHANGES
0	8/17/2021	

This information provided by Automationdirect.com is provided "as is" without any guarantee of any kind. Example programs and schematics are provided by Automationdirect.com to assist others. Automationdirect.com does not guarantee that this example program or schematic is suitable for your particular application, nor do we assume any responsibility for the example program or schematics in your application.

REVISION 0

PAGE 111

PROJECT 22102103

LOCATION: L1 L1-SP

Cabinet Subpanel

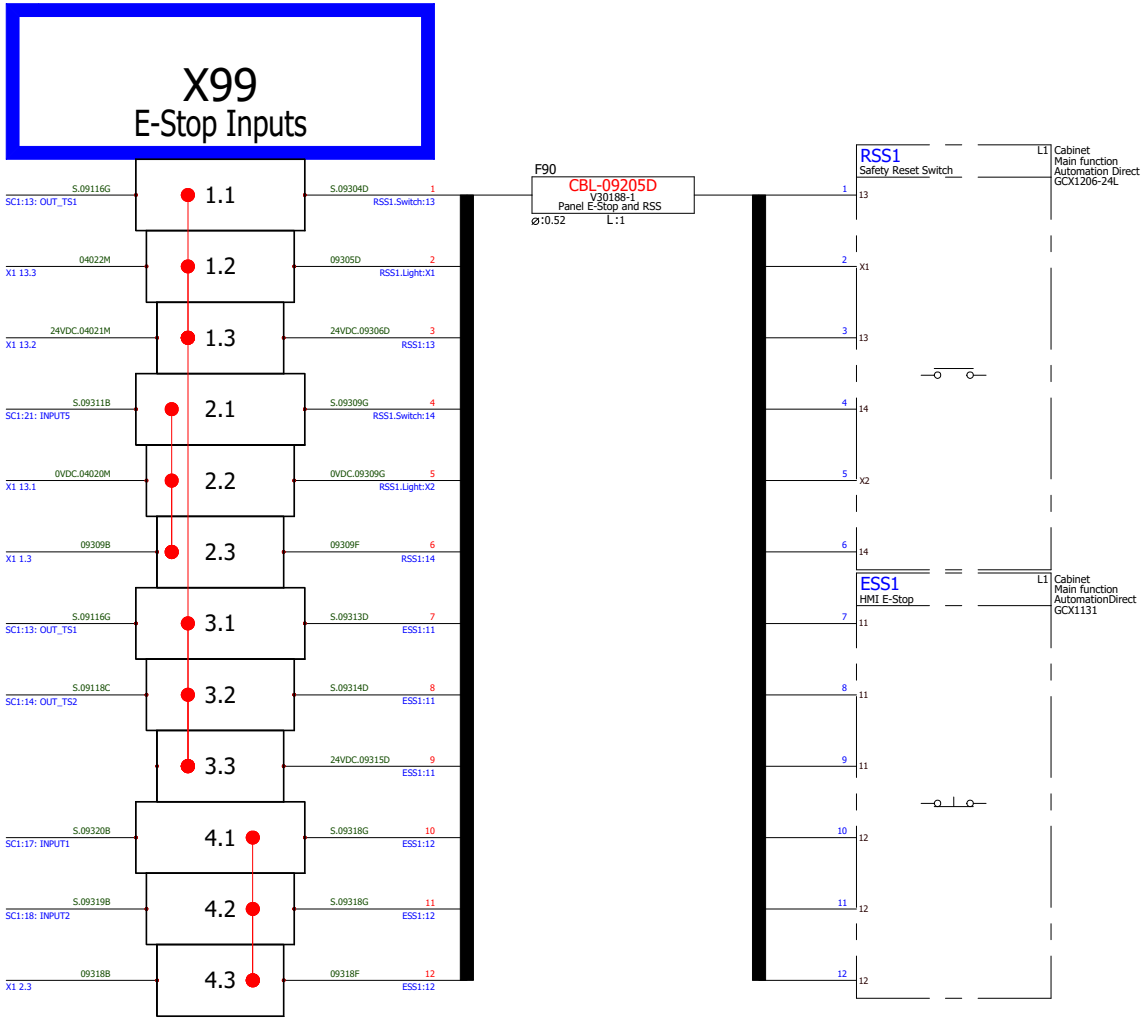

AutomationDirect
3505 Hutchinson Rd
Cumming, GA 30040
(800) 633-0405

X99-E-Stop Inputs(1/2)

REV.	DATE	CHANGES
0	8/17/2021	

This information provided by Automationdirect.com is provided "as is" without any guarantee of any kind. Example programs and schematics are provided by Automationdirect.com to assist others. Automationdirect.com does not guarantee that this example program or schematic is suitable for your particular application, nor do we assume any responsibility for the example program or schematics in your application.

REVISION 0

PAGE 112

PROJECT 22102103

LOCATION: L1 L1-SP

Cabinet Subpanel

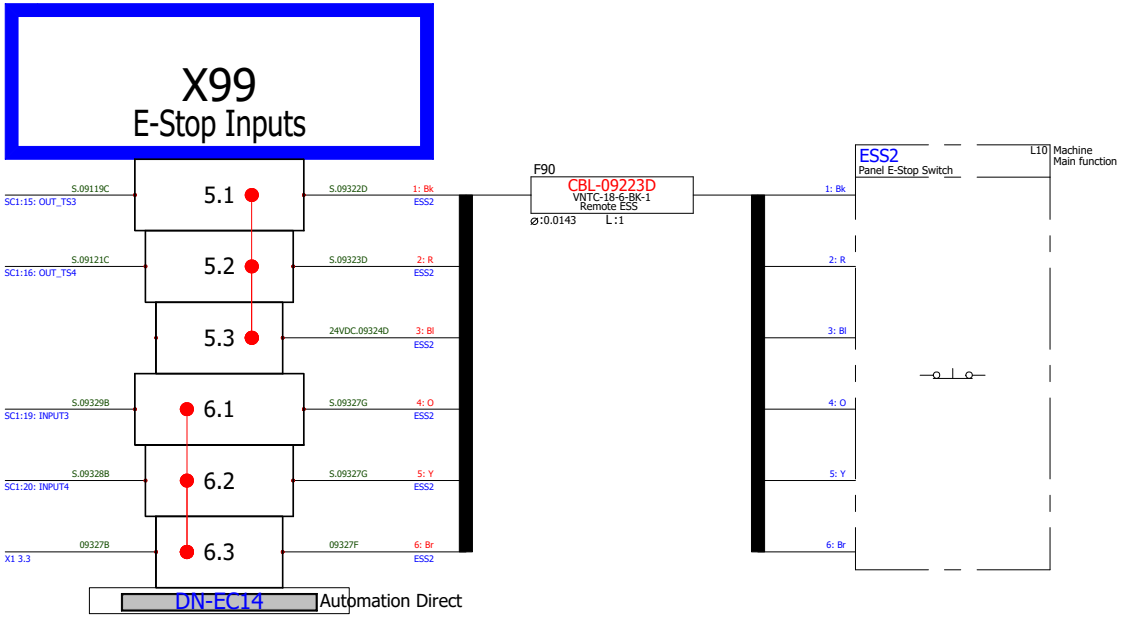

AutomationDirect
3505 Hutchinson Rd
Cumming, GA 30040
(800) 633-0405

X99-E-Stop Inputs(2/2)

REV.	DATE	CHANGES
0	8/17/2021	

REVISION 0

PAGE 113

PROJECT 22102103

LOCATION: L1 L1-SP

Cabinet Subpanel

This information provided by Automationdirect.com is provided "as is" without any guarantee of any kind. Example programs and schematics are provided by Automationdirect.com to assist others. Automationdirect.com does not guarantee that this example program or schematic is suitable for your particular application, nor do we assume any responsibility for the example program or schematics in your application.

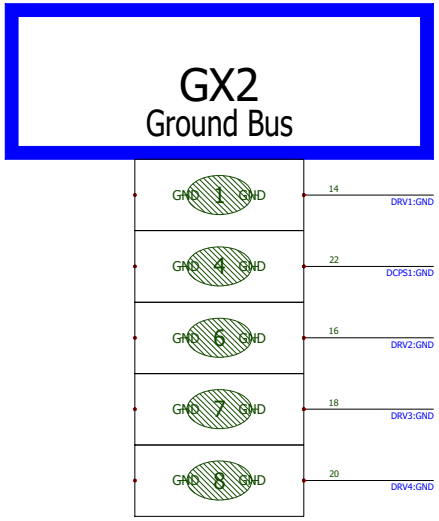

AutomationDirect
3505 Hutchinson Rd
Cumming, GA 30040
(800) 633-0405

GX2-Ground Bus(1/1)

REV.	DATE	CHANGES
0	8/17/2021	

REVISION 0

PAGE 114

PROJECT 22102103

LOCATION: L1 L1-SP Cabinet Subpanel

This information provided by Automationdirect.com is provided "as is" without any guarantee of any kind. Example programs and schematics are provided by Automationdirect.com to assist others. Automationdirect.com does not guarantee that this example program or schematic is suitable for your particular application, nor do we assume any responsibility for the example program or schematics in your application.