IDEM SEU31TD Series Viper Expansion Modules w/Configurable Delay

SEU31TD-280008

The SEU31TD series Viper safety relay expansion modules can be directly wired to the SCR21, SCR31, SCR73, and SCR3142TD series safety relays to increase the number of safety output contacts and expand functionality of the base unit safety relays. They can also be used in conjunction with the SEU31 series expansion modules.

Note: Not for use with safety light curtains

Features

- Configurable time delay between 0-30 seconds
- Fault monitored via feedback contacts
- Multiple expansion modules can be connected to a single base SCR unit
- Easy diagnostics of status via 3 LEDs
- 22.5 mm DIN rail mounting

Safety Data per EN 13849-1		
	Instant	***Delayed***
Category	4	3
Performance level	Ple	Ple
$MTTF_d$	134a (High)	134a (High)
DC_{avg}	95% (High)	95% (High)
Safety Data per IEC/EN 62061, IEC/EN 61508		
Sil CL	SIL CL 3	SIL CL 3
Sil	SIL3	SIL3
HFT	1 (Dual channel)	1 (Dual channel)
DC_{avg}	95% (High)	95% (High)
SFF	90-99%	90-99%
PFH_d (t-20a)	$2.00E^{-04}$	$2.00E^{-04}$

SEU31TD Series Release Delay Expansion Modules					
Part Number	***Price***	***Type***	***Voltage***	***Outputs***	***Connection***
SEU31TD-280008	$289.00	Expansion module	24V AC/DC	Delayed: 3 NO and 1 NC (0-30 Seconds)	Fixed screw terminals
SEU31TD-280008-P	$337.00				Pluggable terminals

SEU31TD Series Specifications	
	General Specifications
Temperature	-20° to +55°C [-4° to +131°F]
Altitude	< 2,000 meters
Vibration Resistance	Tested to IEC 60068-2-6
Degree Of Protection	IP20
Housing	UL 94V-0 Thermoplastic
Weight	150g (5.3 oz)
Agency Approvals and Standard	cULus file E258676, CE, TUV
Terminal Designation per EN 50 005	1 x 4 mm^2 stranded ferruled (isolated) or 2 x 1.5 mm^2 stranded ferruled (isolated) or 2 x 2.5 mm^2 solid
Wire Fixing	M3.5 terminals with self-lifting wire protection or cage clamp terminals
	Input Specifications
Nominal Voltage	24V AC/DC
Voltage Range	85-110%
Maximum Consumption	2.5 W (24VDC)
Nominal Frequency	50Hz-60Hz
Control Voltage	N/A
Control Current	N/A
Short Circuit Protection	Internal PTC (Positive Temperature Coefficient resistor)
Over Voltage Protection	Internal VDR (Voltage Dependent resistor)
	Output Specifications
Electrical Contact Life	6A / 250VAC 100,000 cycles, 1A / 250VAC 1,000,000 cycles
Mechanical Life	10×10^6
Contact Type	Delayed: 3 NC and 1 NO (0 to 30 seconds)
Operate Delay	100ms
Release Delay	25ms
Nominal Output Voltage	250VAC
Thermal Current (I_{th})	Max. 6A
Short Circuit Strength	Minimum Contact Fuses - 4A slow blow, 6A fast blow
Switching Capacity	AC - 250V, 1500V, 6A, Ohmic 230V, 4A for AC-15; DC - 24V, 30W, 1.25 A, Ohmic
Switching Frequency	Max. 360 switching cycles/hr

IDEM SEU31TD Series Viper Expansion Modules w/Configurable Delay

Dimensions

mm [in]

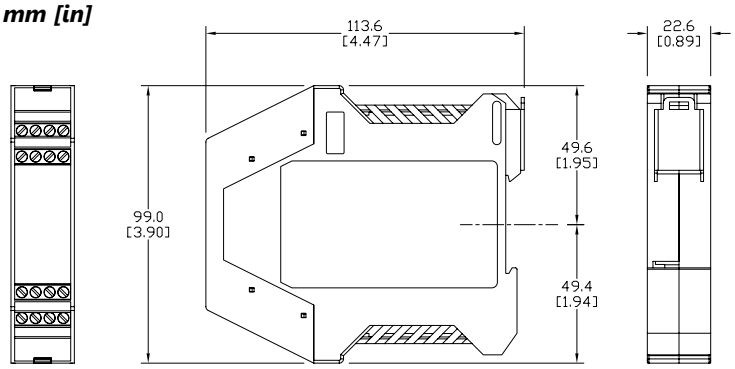

LED Diagnostics

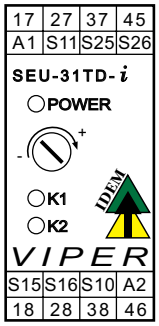

POWER	Power to the safety relay
K1	Power to internal relay K1
K2	Power to internal relay K2

Applications

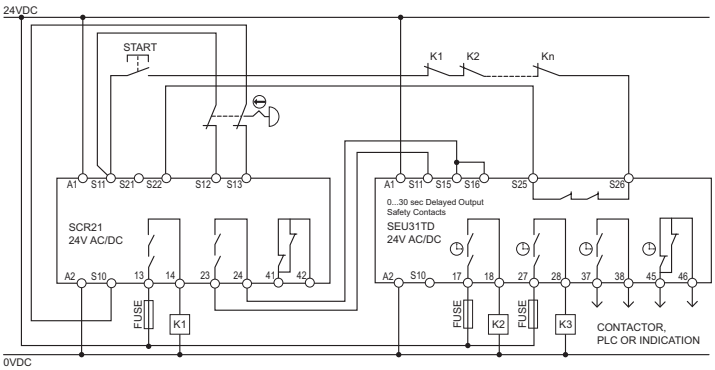

Dual channel, E-Stop, manual reset with expansion unit

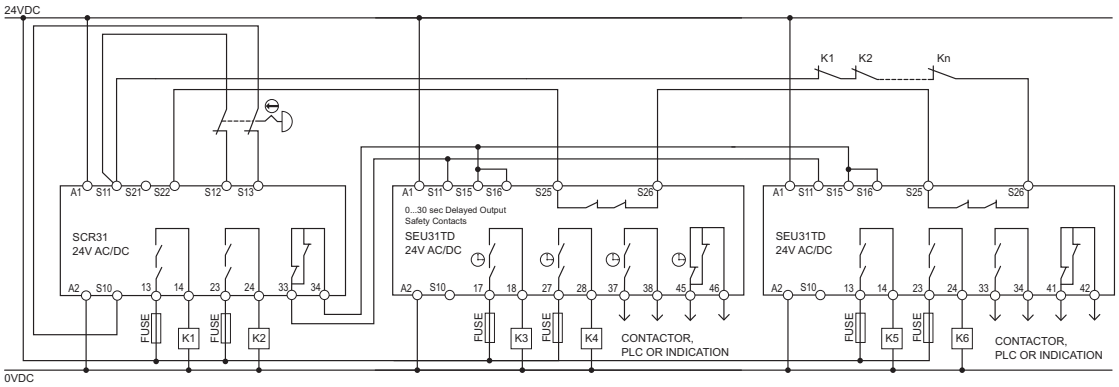

Dual channel, E-Stop, auto reset with multiple SEU31TD expansion units

Note: A power supply unit with electrical isolation from the mains supply must be connected. External fusing of each safety output contact is necessary, a 4A slow-blow or 6A (quick action) must be provided. The maximum cabling and connecting resistance of control lines must not be exceed 300 Ohms.

Safety Products

Warning: Safety products sold by AutomationDirect are Safety components only. The purchaser/installer is solely responsible for the application of these components and ensuring all necessary steps have been taken to assure each application and use meets all performance and applicable safety requirements and/or local, national and/or international safety codes as required by the application. AutomationDirect cannot certify that our products, used solely or in conjunction with other AutomationDirect or other vendors' products, will assure safety for any application. Any person using or applying any products sold by AutomationDirect is responsible for learning the safety requirements for their individual application and applying them, and therefore assumes all risks, and accepts full and complete responsibility, for the selection and suitability of the product for their respective application.

AutomationDirect does not provide design or consulting services, and cannot advise whether any specific application or use of our products would ensure compliance with the safety requirements for any application.