AC Servo Drive Specifications

Servo drive overview

Power On LED
Main power is ON

LED Display
The LED display has 5 full digits and is used to indicate servo status and alarms

Keypad
Five Function keys:

MODE: Press to select or change mode

NEXT: Press to shift left

UP: Press to increase values

DOWN: Press to decrease values

ENTER: Press to enter value

Control Power Terminal
Single-phase power 230 VAC, 50/60 Hz is connected to L1 and L2

Main Power Terminal
Three-phase power 230 VAC, 50/60 Hz is connected to R, S and T

(Single-phase power 230 VAC 50/60 Hz may be connected to R and S for the low inertia systems)

I/O Interface
50-pin connector for interfacing the host controller (such as DirectLOGIC PLC) and other types of I/O signals.

Use our ZIPLink kit which provides DIN-rail mounted screw terminals for easy connection.

- Command inputs:
  - Pulse and Direction Encoder Follower Analog Velocity/Torque
- (8) Digital Inputs
- (5) Digital Outputs
- (2) Analog Monitors
- Encoder Output (scalable) A+, A-, B+, B-, Z+, Z-

Motor Output Terminal
The servo motor power cable is connected to U, V and W. Use our factory made and tested cables available in 10, 20, 30 or 60 foot lengths for easy connection.

Encoder Interface
20-pin connector for interfacing the servo motor encoder. Use our factory-made and tested cable available in 10, 20, 30 or 60 foot lengths for easy connection.

Regenerative Resistor Terminal
1. When the internal regenerative resistor is used, the P and D terminal are connected together while the P and C connection is left open.
2. When an external regenerative resistor is used, it is connected across the P and C terminals while the P and D connection is left open. Use our factory approved resistors for "sure" results.

Ground Terminals

Serial Communication Interface
6-pin RS-485/422/232 interface to personal computer with SureServo Pro set-up software or host controller with Modbus RTU/ASCII protocol. Use our factory-made cables for easy connection to the PC or the host controller.

SureServo systems run "out-of-the-box"... but may be reconfigured for many applications!

The SureServo drives are fully digital and include over 165 programmable parameters. For convenience, the parameters are grouped into five categories:

1. Monitor parameters
2. Basic parameters
3. Extended parameters
4. Communication parameters
5. Diagnostic parameters.

All parameters have commonly used default values which allow you to operate the SureServo system "out-of-the-box". However, the programmability and large variety of parameters make the SureServo systems suitable for a very broad range of applications, including almost all types of general purpose industrial machinery such as assembly, test, packaging, machine tool, and robotics.

AC Servo Drive Specifications

Servo drive specifications

General Drive Specifications	
Permissible Frequency	50/60 Hz ±5%
Encoder Resolution / Feedback Resolution	2500 lines / 10000 ppr
Control of Main Circuit	SVPWM (Space Vector Pulse Width Modulation) Control
Tuning Modes	Easy / Auto / Manual
Dynamic Brake	Built-in control
Analog Monitor Outputs (2)	Monitor signal can be set by parameters (Output voltage range: ±8V; Resolution: 12.8 mV/ count)
8 Programmable Digital Inputs (45 selectable functions)	Servo enable, Alarm reset, Gain switching, Pulse counter clear, Fault stop, CW/CCW over-travel
	Internal parameter selection, Torque limit activation, Velocity limit activation, Control mode selection
Scalable Encoder Output	Encoder signal output A, /A, B, /B, Z /Z, Line Driver
5 Programmable Outputs (9 selectable indicators)	Servo ready, Servo On, Low velocity, Velocity reached, In Position, Torque limiting, Servo fault, Electromagnetic brake control, Home search completed
Communication Interface	RS-232 / RS-485 / RS-422 / Modbus ASCII & RTU up to 115k Baud
Protective Functions	Overcurrent, Overvoltage, Undervoltage, Overload, Excessive velocity/position error, Encoder error, Regeneration error, Communication error
Installation Site	Indoor location (free from direct sunlight), no corrosive liquid and gas (far away from oil mist, flammable gas, dust)
Altitude	1000m [3281 ft] above sea level – maximum
Operating Temperature	0 to 55 °C [32 to 131 °F] (If operating temperature is above 55°C, forced cooling is required). For long-term reliability, the ambient temperature of SureServo systems should be under 45°C (113°F).
Storage Temperature	-20° to 65°C (-4° to 149°F)
Humidity	0 to 90% (non-condensing)
Vibration	9.81 m/s2 (1G) less than 20Hz, 5.88 m/s2 (0.6G) 20 to 50 Hz
Protection	IP 20
Agency Approvals	CE; UL Certified (U.S. and Canada)

Servo drive specifications (continued)

Model and Mode Specific Drive Specifications										
		AC Servo Model	SVA-2040			SVA-2100			SVA-2300	
		Price	Retired			Retired			Retired	
		Voltage Phase	Single-phase or Three-phase						Three-phase	
		Voltage and Frequency Range	3-phase: 170~255 VAC @ 50/60 Hz ±5%; 1-phase: 200~255 VAC @ 50/60 Hz ±5%						170~255 VAC @ 50/60 Hz ±5%	
	Main Circuit Input Current	Single Phase	3.4A @ 400W			8.0A @ 1kW			–	
		Three Phase	2.6A @ 400W			6.2A @ 1kW			13.6A @ 3kW	
		Main Circuit Inrush Current	44A			77A			87A	
		Main Circuit Power Cycling	Maximum 1 power cycle per minute							
		Control Circuit Current and Voltage	43 mA @ 200~255 VAC, 1 phase							
		Control Circuit Inrush Current	32A maximum							
		Cooling System	Natural Air Circulation			Internal Cooling Fan				
	Drive Heat Loss *	Motor driven *	SVL-201(B)	SVL-202(B)	SVL-204(B)	SVL-207(B)	SVL-210(B)	SVM-210(B)	SVM-220(B)	SVM-230(B)
		Heat Loss	12W	15W	20W	35W	45W	50W	75W	80W
		Weight	1.5 kg [3.3 lb]			2kg [4lb]			3kg [7lb]	
Position Control Mode		Max. Input Pulse Frequency	Max. 500 kpps (Line driver); Max. 200 kpps (Open collector)							
		Pulse Type	Pulse + Direction, A phase + B phase Quadrature, CCW pulse + CW pulse							
		Command Source	External pulse train / Onboard indexer							
		Smoothing Strategy	Low-pass and P-curve filter							
		Electronic Gear	Electronic gear N/M multiple; N: 1~32767, M: 1~32767(1/50<N/M<200)							
		Torque Limit Operation	Set by parameters or by analog input							
		Feed Forward Compensation	Set by parameters							
Velocity Control Mode	Analog Input Command	Voltage Range	Bipolar ±10 VDC							
		Input Resistance	10 k							
		Time Constant	2.2 µs							
		Resolution	(Varies with input voltage) 13 bits @ 0V~1V; 13~10 bits @ 1V~2V; 10 bits @ 2V~10V							
		Speed Control Range	1:5000							
		Command Source	External analog signal / Onboard indexer							
		Smoothing Strategy	Low-pass and S-curve filter							
		Torque Limit Operation	Set by parameters or via analog input							
		Frequency Response Characteristic	Maximum 450 Hz							
		Speed Accuracy (at rated rotation speed)	0.01% or less at 0 to 100% load fluctuation							
			0.01% or less at ±10% power fluctuation							
			0.01% or less at 0 to 50°C ambient temperature fluctuation							
Torque Control Mode	Analog Input Command	Voltage Range	Bipolar ±10 VDC							
		Input Resistance	10 kΩ							
		Time Constant	2.2 µs							
		Resolution	10 bits							
		Permissible Time for Overload	8 sec. under 200% rated output							
		Command Source	External analog signal / Onboard indexer							
		Smoothing Strategy	Low-pass filter							
		Speed Limit Operation	Set by parameters or via analog input							

*** Drive heat loss varies depending upon which motor is connected to the drive.**

AC Servo Motor Specifications

Servo motor overview

750W and below

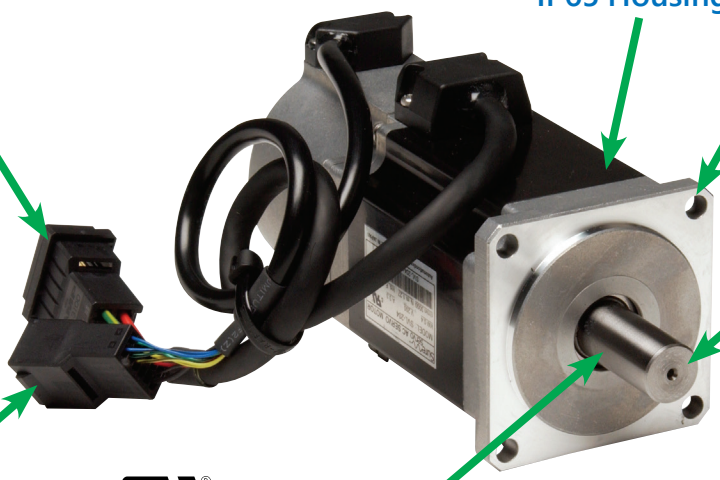

Motor Power and Brake Connector
1-foot cable with 6-position connector (Not liquid tight)

Low Inertia Motors
- 100W 40 mm flange
- 200W 60 mm flange
- 400W 60 mm flange
- 750W 80 mm flange

IP65 Housing

Keyless Shafts
- 100W 8 mm diameter
- 200W 14 mm diameter
- 400W 14 mm diameter
- 750W 19 mm diameter

Encoder Connector
1-foot cable with 9-position connector (Not liquid tight)

Without Shaft Seal
(not liquid tight)

All SureServo motors have keyless shafts for use with servo-grade clamp or compression couplings.

1 kW and above

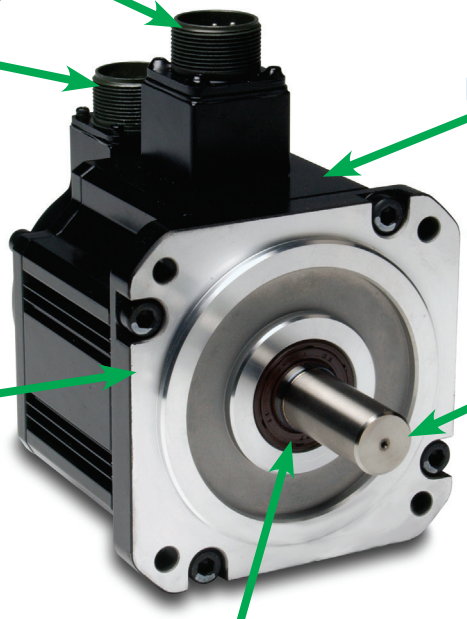

Motor Power and Brake Connector
(Liquid tight when using AutomationDirect cables)

Encoder Connector
(Liquid tight when using AutomationDirect cables)

IP65 Housing

Low and Medium Inertia Motors
Low Inertia Model
- 1 kW 100 mm flange

Medium Inertia Models
- 1 kW 130 mm flange
- 2 kW 180 mm flange
- 3 kW 180 mm flange

Keyless Shafts
Low Inertia Model
- 1 kW 22 mm diameter

Medium Inertia Models
- 1 kW 22 mm diameter
- 2 kW 35 mm diameter
- 3 kW 35 mm diameter

With Shaft Seal
(liquid tight)

AC Servo Motor Specifications

Motor Specifications

Inertia Range			Low					Medium		
Model Name: Sxx-xxx			SVL-201	SVL-202	SVL-204	SVL-207	SVL-210	SVM-210	SVM-220	SVM-230
Price			Retired	Retired	Retired	Retired	Retired	Retired	$1,000.00	Retired
Model with brake: Sxx-xxxB			SVL-201B	SVL-202B	SVL-204B	SVL-207B	SVL-210B	SVM-210B	SVM-220B	SVM-230B
Price			Retired	$699.00	Retired	Retired	$1,103.00	Retired	$1,367.00	$1,741.00
Rated output power		W	100	200	400	750	1000	1000	2000	3000
Rated torque		N·m	0.32	0.64	1.27	2.39	3.3	4.8	9.4	14.3
		lb·in	2.8	5.7	11.2	21.2	29.2	42.5	83.2	126.6
Maximum torque		N·m	0.95	1.91	3.82	7.16	9.9	15.7	23.5	35.8
		lb·in	8.4	16.9	33.8	63.4	87.6	138.9	208.0	316.8
Rated speed		rpm	3000					2000		
Max. speed		rpm	5000			4500		3000		
Rated current		A	1.1	1.7	3.3	5.0	6.8	5.6	13.1	17.4
Max. current		A	3.0	4.9	9.3	14.1	18.7	17.6	31.4	42.3
Drive input current		1 phase A	1.0	1.7	3.4	5.9	8.0	8.0	-	-
		3 phase A	0.8	1.3	2.6	4.7	6.2	6.2	9.1	13.6
Max. radial shaft load		N	78.4	196		343	490		784	
		lb	18	44		77	110		176	
Max. thrust shaft load		N	39.2	68.6		98			392	
		lb	9	15		22			88	
Brake	Voltage	VDC	24							
	Current	ADC	0.21	0.38		0.4	0.75	0.83	1.45	1.67
	Holding Torque	N·m	0.32	1.27		2.55	9.3	7.5	32.0	50.0
		lb·in	2.83	11.24		22.57	82.3	66.38	283.2	442.5
Rotor inertia w/o brake		kg·m2	0.03E-4	0.18E-4	0.34E-4	1.08E-4	2.6E-4	5.98E-4	15.8E-4	43.3E-4
		lb·in·s2	0.27E-4	1.59E-4	3.0E-4	9.56E-4	23.0E-4	52.9E-4	139.8E-4	383.2E-4
Rotor inertia with brake		kg·m2	0.06E-4	0.28E-4	0.44E-4	1.32E-4	3.1E-4	8.8E-4	27.8E-4	56.3E-4
		lb·in·s2	0.53E-4	2.48E-4	3.9E-4	11.7E-4	27.4E-4	77.9E-4	246.0E-4	498.3E-4
Mechanical time constant		ms	0.6	0.9	0.7	0.6	1.7	1.4	1.6	0.9
Static friction torque		N·m	0.02	0.04		0.08	0.49	0.29	0.98	
Torque constant-KT		N·m/A	0.32	0.39	0.4	0.5	0.56	0.91	0.77	0.86
Voltage constant-KE		V/rpm	33.7E-3	41.0E-3	41.6E-3	52.2E-3	58.4E-3	95.71E-3	81.1E-3	90.5E-3
Armature resistance		Ω	20.3	7.5	3.1	1.3	2.052	1.98	0.6	0.162
Armature inductance		mH	32	24	11	6.3	8.4	13.2	6.1	2.3
Electrical time constant		ms	1.6	3.2	3.2	4.8	4.1	6.7	10.1	14.2
Motor Type			Brushless, AC, permanent magnet [Neodymium (Nd), Iron (Fe), Boron (B)]							
Insulation class			Class F							
Insulation resistance			>100 MΩ , 500 VDC							
Insulation strength			1500 VAC, 50 Hz, 60 seconds							
Ambient temperature range			0 to 40°C (32°F to 104°F)							
Operating temperature (measured case temperature)			70°C (158°F)							
Maximum operating temperature (measured case temperature)			70°C + 40°C = 110°C (230°F)							
Storage temperature			-20 to 65°C (-4 to 149°F)							
Operating humidity			20 to 90% RH (non-condensing)							
Storage humidity			20 to 90% RH (non-condensing)							
Vibration / Shock			2.5G / 5.0G							
Environmental rating			IP65 motor body; IP40 shaft; IP20 connector				IP65 (requires SureServo cables)			
Weight without brake		kg	0.5	0.9	1.3	2.5	4.7	4.8	12.0	17.0
		lb	1.1	1.98	2.87	5.5	10.36	10.58	26.46	37.48
Weight with brake		kg	0.7	1.4	1.8	3.4	6.3	7.5	19.0	24.0
		lb	1.54	3.09	3.97	7.5	13.89	16.53	41.89	52.9
Agency Approvals			CE; UL recognized (U.S. and Canada)							

NOTE: U.S. customary units are for reference only.

Standard wiring examples

This wiring diagram shows basic wiring only, and additional wiring configurations are possible for some I/O. Refer to the "Installation and Wiring" chapter of the User Manual for more detailed wiring information.

Position (Pr & Pt) Control Modes

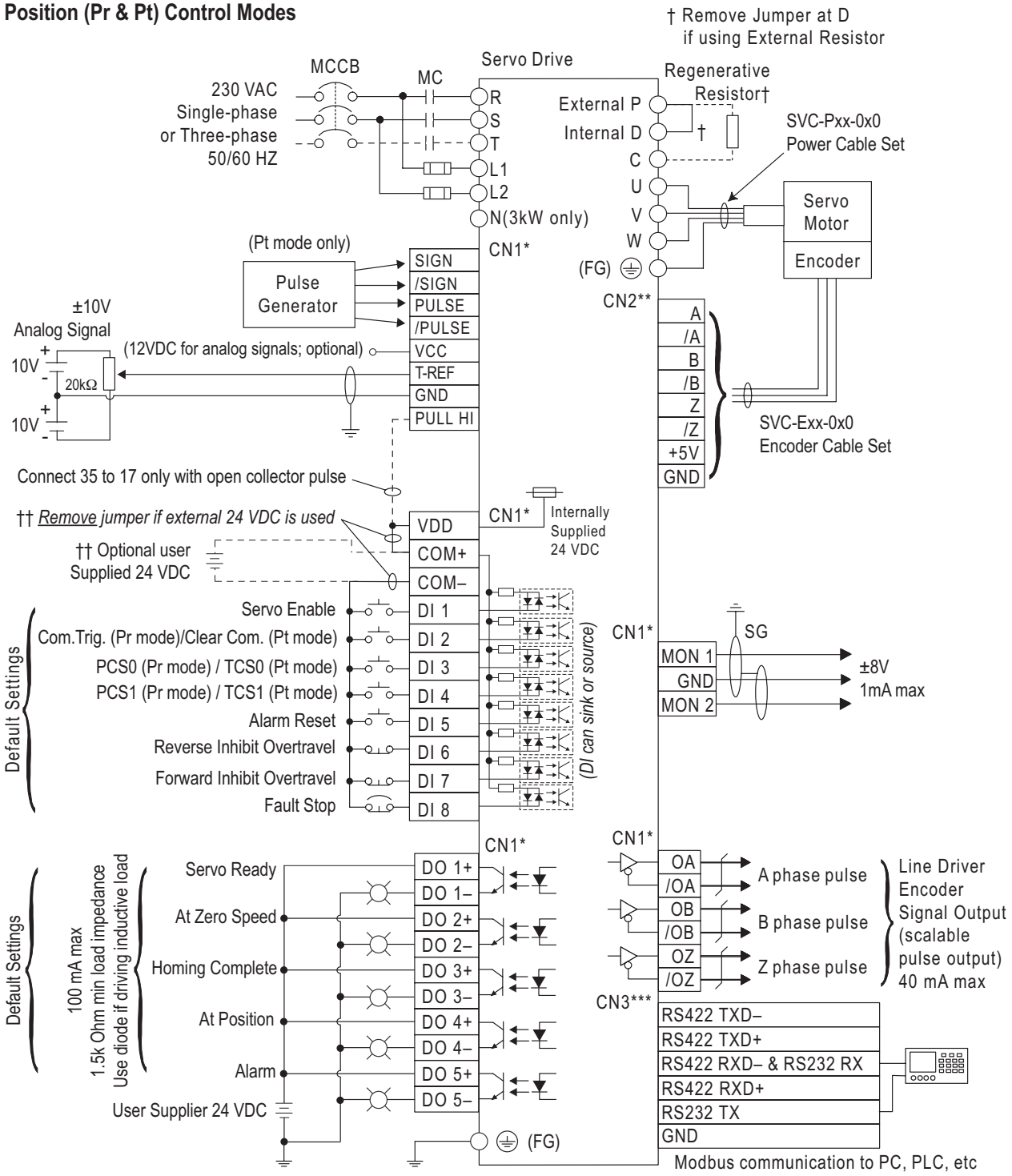

* Use connection kit part #s ZL-RTB50 & ZL-SVC-CBL-50(-x) for CN1 terminal connections.
** Use cable part # SVC-Exx-0x0 for CN2 terminal connections.
*** Use cable part # SVC-MDCOM-CBL for CN3 terminal Modbus network connections.

Standard wiring examples (continued)

This wiring diagram shows basic wiring only, and additional wiring configurations are possible for some I/O. Refer to the "Installation and Wiring" chapter of the User Manual for more detailed wiring information.

Velocity and Torque Control Modes

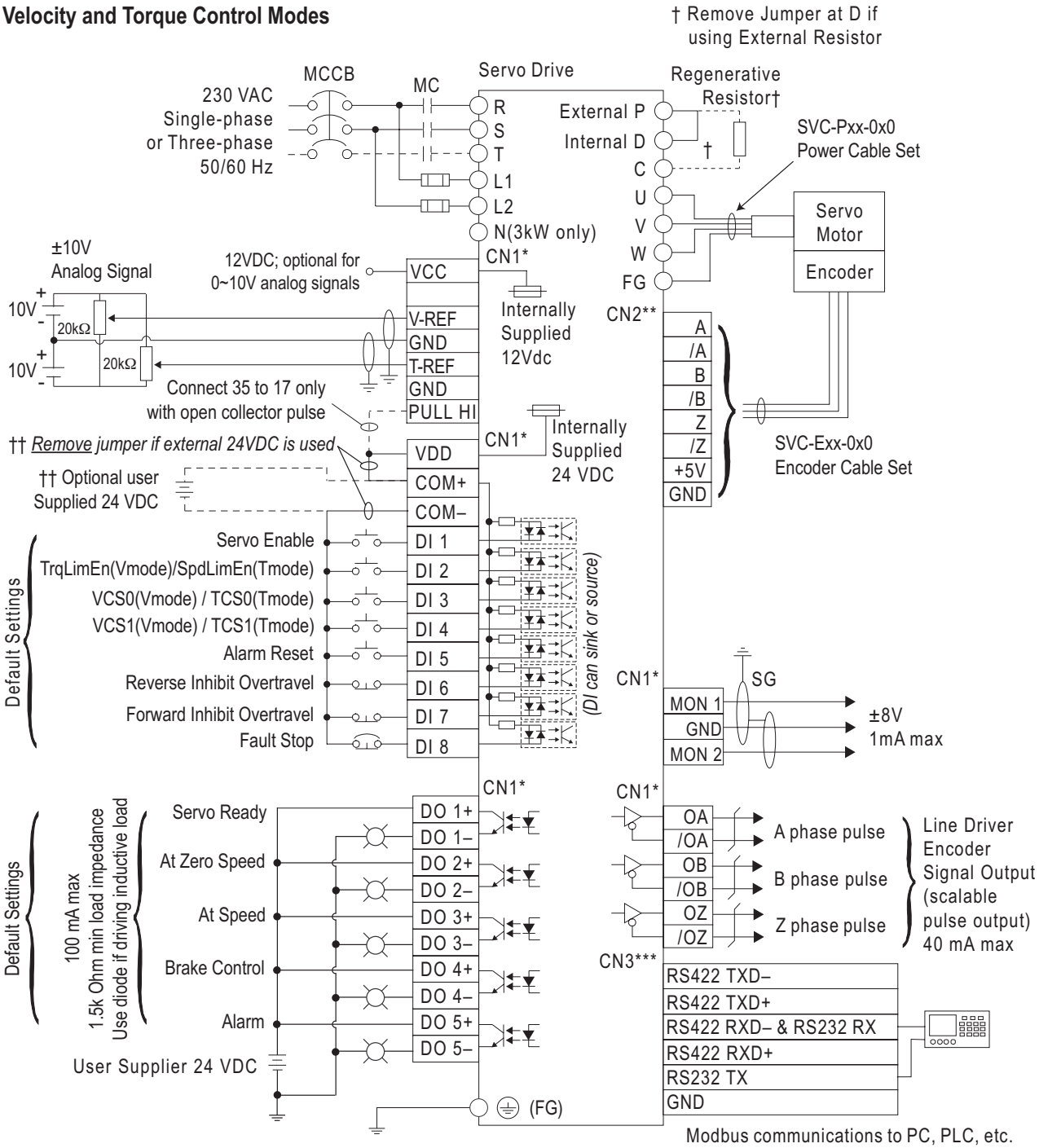

* Use connection kit part #s ZL-RTB50 & ZL-SVC-CBL-50(-x) for CN1 terminal connections.
** Use cable part # SVC-Exx-0x0 for CN2 terminal connections.
*** Use cable part # SVC-MDCOM-CBL for CN3 terminal Modbus network connections.

AC Servo System Dimensions

Servo drive dimensions

SVA-2040

Recommended user supplied mounting screw is M6. Tighten to 14 kgf·cm (1.37 N·m).

UNITS: mm (in)
(Inch values are for reference only.)

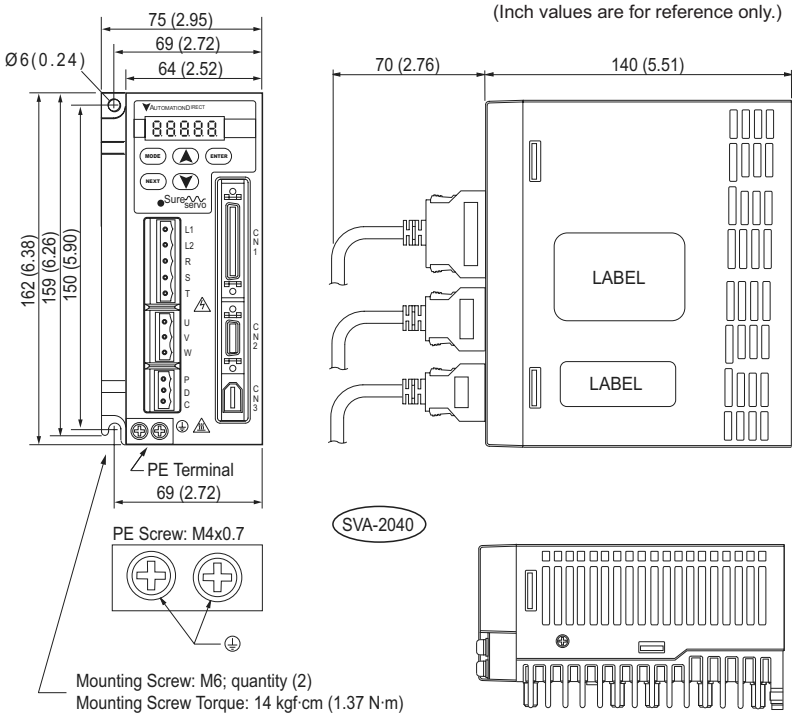

SVA-2100

Recommended user supplied mounting screw is M6. Tighten to 14 kgf·cm (1.37 N·m).

UNITS: mm (in)
(Inch values are for reference only.)

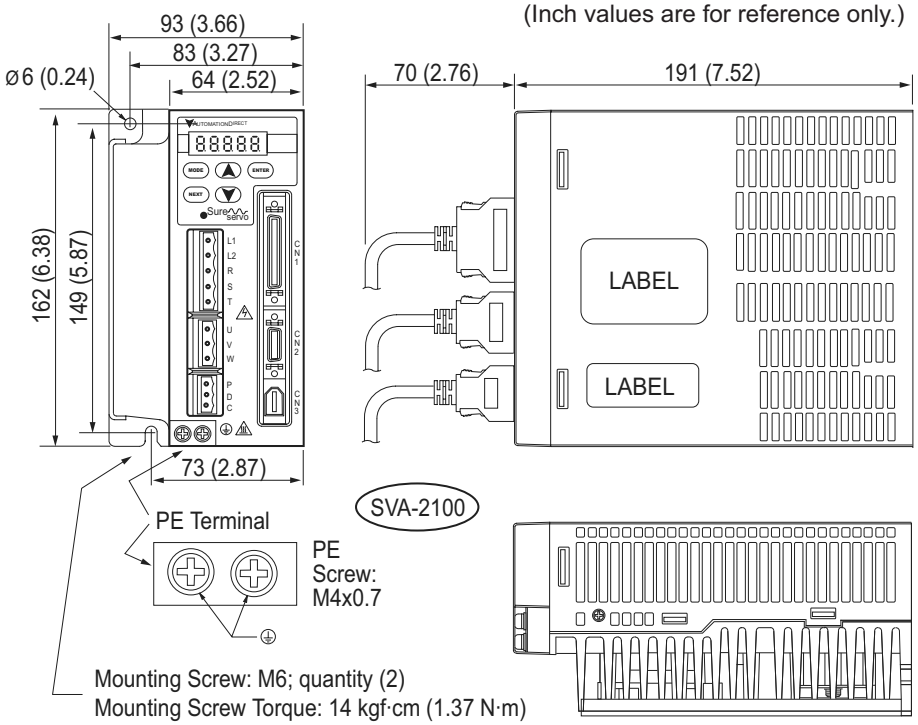

Servo drive dimensions (continued)

SVA-2300

Recommended user supplied mounting screw is M6. Tighten to 14 kgf·cm (1.37 N·m).

UNITS: mm (in)
(Inch values are for reference only.)

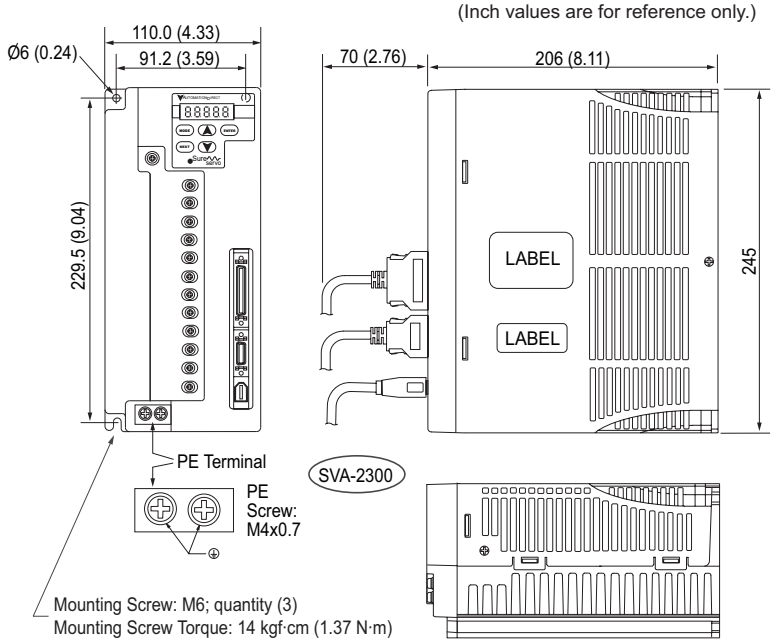

Servo motor dimensions

Low inertia models SVL-201(B), SVL-202(B), SVL-SVL-204(B), SVL-207(B)

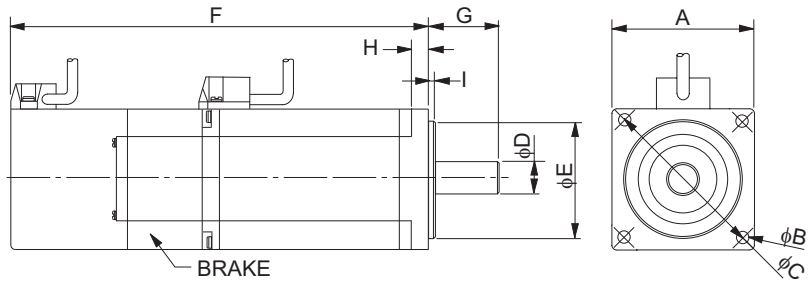

SureServo® Motor Dimensions – 100W-750W Low Inertia				
Dimension	***SVL-201(B)***	***SVL-202(B)***	***SVL-204(B)***	***SVL-207(B)***
A	40 [1.575]	60 [2.362]		80 [3.15]
B	4.5 [0.1772]	5.5 [0.2165]		6.6 [0.2598]
C	46 [1.811]	70 [2.756]		90 [3.543]
D	8 +0.0/-0.009 (8h6)	14 +0.0/-0.011 (14h6)		19 +0.0 -0.013 (19h6)
E	30 +0.0/-0.021 (30h7)	50 +0.0/-0.025 (50h7)		70 +0.0/-0.030 (70h7)
F (w/o brake)	100.1 [3.941]	102.4 [4.032]	124.4 [4.898]	135 [5.315]
F (with brake)	135.7 [5.343]	137 [5.394]	159 [6.26]	171.6 [6.756]
G	25 [0.98]	30 [1.18]		35 [1.38]
H	5 [0.197]	6 [0.236]		8 [0.315]
I	2.5 [0.098]	3 [0.118]		
Cable length	300mm (12 inches)			

UNITS: mm [in]. (Inches are for reference only; not included on diameter dimensions for accuracy.)

AC Servo System Dimensions

Servo motor dimensions (continued)

Low inertia models SVL-210(B)

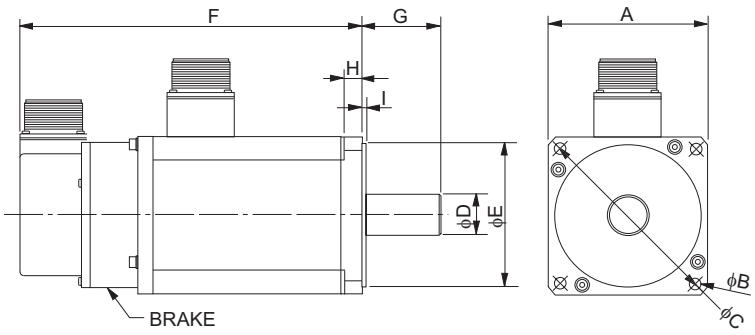

SureServo® Motor Dimensions -1000W Low Inertia	
Dimension	***SVL-210(B)***
A	100 [3.937]
B	9 [0.3543]
C	115 +0.2/-0.2 [4.528]
D	22 +0.0/-0.013 (22h6)
E	95 +0.0/-0.035 (95h7)
F (w/o brake)	158 [6.22]
F (with brake)	190 [7.48]
G	45 [1.77]
H	17 [0.669]
I	7 [0.28]

UNITS: mm [in] (Inches are for reference only; not included on diameter dimensions for accuracy.)

Medium inertia models SVM-210(B), SVM-220(B), SVM-230(B)

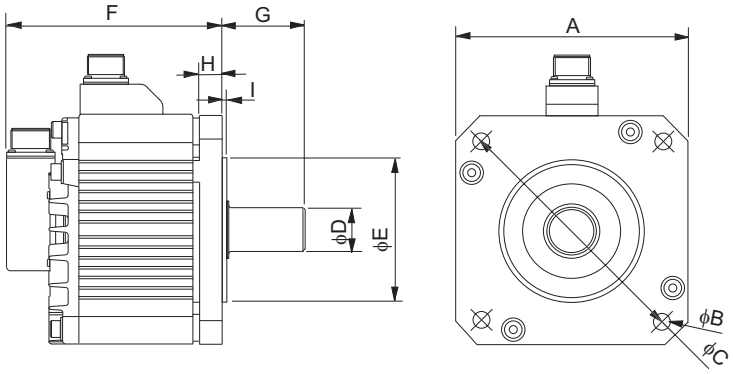

SureServo® Motor Dimensions -1000W-3000W Medium Inertia			
Dimension	***SVM-210(B)***	***SVM-220(B)***	***SVM-230(B)***
A	130 [5.118]	180 [7.087]	
B	9 [0.3543]	13.5 [0.5315]	
C	145 +0.2/-0.2 [5.709]	200 +0.2/-0.2 [7.874]	
D	22 +0.0/-0.013 (22h6)	35 +0.0/-0.016 (35h6)	
E	110 +0.0/-0.035 (110h7)	114.3 +0/-0.035 (114.3h7)	
F (w/o brake)	143 [5.63]	164 [6.457]	212 [8.35]
F (with brake)	181 [7.126]	213 [8.386]	258 [10.16]
G	55 [2.17]	75 [2.95]	
H	15 [0.591]	20 [0.787]	
I	4 [0.157]		

UNITS: mm [in] (Inches are for reference only; not included on diameter dimensions for accuracy.)

AC Servo System Accessories

Accessories

External Regeneration Resistors
Use external resistors to provide additional regenerative capacity and to dissipate heat away from the servo drive.

Part Number	Resistance	SureServo Drives	Price
GS-25P0-BR	40Ω	SVA-2040	$49.50
GS-2010-BR-ENC	20Ω	SVA-2100, SVA-2300	$344.00

Resistor GS-25PO-BR

AC Line Filters
Input EMI filters reduce electromagnetic interference or noise on the input side of the servo drive. They are required for CE compliance and recommended for installations prone to or sensitive to electromagnetic interference.

SureServo® Drives	AC Input Power	EMI Filter Rating	EMI Filter Part Number	Price
SVA-2040	Single-Phase	250V, 1-phase, 20A	20DRT1W3S	$73.00
	Three-Phase	250V, 3-phase, 10A	10TDT1W4C	$85.00
SVA-2100	Single-Phase	250V, 1-phase, 20A	20DRT1W3S	$73.00
	Three-Phase	250V, 3-phase, 10A	10TDT1W4C	$85.00
SVA-2300	Three-Phase	250V, 3-phase, 26A	26TDT1W4C	$114.00

AC Line Filter 10TD1W4C

Note: These EMI Filters are electrically compatible with the SureServo drives. however, they are intended to be mounted next to the servo drive. Do not mount the filter under the drive. The drive mounting holes on these units are intended to be used only with AutomationDirect's line of VFDs.

Edison Fuses & Fuji Contactors

SureServo® Drives	Input Type	Input Voltage	Edison Fuse - Class CC	Price*	Contactor**	Price
SVA-2040	Main Input Power	230V 3-Phase	HCTR4	$173.00	SC-E02-xxx	varies
SVA-2100			HCTR7-5	$193.00	SC-E03-xxx	varies
SVA-2300			HCTR15	$163.00	SC-E04-xxx	varies
SVA-2040		230V 1-phase	HCTR4	$173.00	SC-E02-xxx	varies
SVA-2100			HCTR10	$173.00	SC-E03-xxx	varies
SVA-2040 SVA-2100 SVA-2300	Control Input Power	230V 1-phase	HCTR2-5	$178.00		

Fuji Contactor SC-E02-xxx

Edison Fuse HCTRx

*** Fuses are sold in packages of 10.**
**** Note: For contactors, xxx = coil voltage (for example, SC-E02P-220VAC).**

SureServo Connector Kit (replacement)
This kit contains replacement input, output, and brake connectors for SureServo drives.

Part Number	Description	SureServo Drives	Price
SVA-CON-1	SureServo connector kit, replacement, inclues (1) input power connector, (1) output power connector and (1) brake resistor connector.	SVA-2040 SVA-2100	$22.00

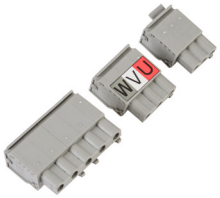
SVA-CON-1

AC Servo System Configuration

SureServo series drives and motors part numbering system

SV A - 2 04 0

Series
SV: *Sure*Servo AC servo

Component Type
A: Drive
L: Low inertia motor
M: Medium inertia motor

Component Option
0: Drive
Blank: Motor without brake
B: Motor with brake

Rated Output Power
01: 100W
02: 200W
04: 400W
07: 750W
10: 1000W
20: 2000W
30: 3000W

Nominal Input Voltage
2: 230VAC; 50/60 Hz

Here is what you will need to order a complete servo system:

1. Servo Drive

2. Servo Motor

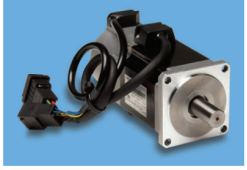

3. Motor Power Cable

4. Motor Encoder Cable

5. ZIPLink I/O Interface

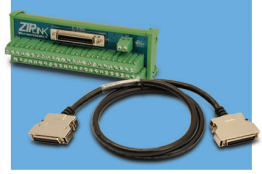

NOTE: Unit can be programmed via keypad.
Optional programming software (free download) and optional programming cable available.

NOTE: If you need a gear box for your configuration, you can do it easily online:
http://www.sureservo.com/gearbox/selector

SureServo AC servo drive, motor, and cable combinations

Inertia & Power		Drive and Motor			Power Cables (from Drive to Motor)				Encoder Feedback Cables				Miscellaneous	
Inertia	*Power*	*Servo Drive*	*Servo Motor without brake (note)*	*Servo Motor with brake (note)*	*10 ft*	*20 ft*	*30 ft*	*60 ft*	*10 ft*	*20 ft*	*30 ft*	*60 ft*	*ZIPLink I/O Interface*	*RS-422/485 Serial Communication Cable*
Low inertia	100W	SVA-2040	SVL-201	SVL-201B	SVC-PFL-010	SVC-PFL-020	SVC-PFL-030	SVC-PFL-060	SVC-EFL-010	SVC-EFL-020	SVC-EFL-030	SVC-EFL-060	ZL-RTB50 and ZL-SVC-CBL50 or ZL-SVC-CBL50-1 or ZL-SVC-CBL50-2	SVC-MDCOM-CBL
	200W		SVL-202	SVL-202B										
	400W		SVL-204	SVL-204B										
	750W	SVA-2100	SVL-207	SVL-207B										
	1000W		SVL-210	SVL-210B	SVC-PHM-010	SVC-PHM-020	SVC-PHM-030	SVC-PHM-060	SVC-EHH-010	SVC-EHH-020	SVC-EHH-030	SVC-EHH-060		
Medium inertia	1000W		SVM-210	SVM-210B										
	2000W	SVA-2300	SVM-220	SVM-220B	SVC-PHH-010	SVC-PHH-020	SVC-PHH-030	SVC-PHH-060						
	3000W		SVM-230	SVM-230B										

Note: **Each servo motor requires an encoder feedback cable and a power cable.**
The motor power cable includes brake power wires for the optional motor brake.