Bus Couplers PX-MOD

PX-MOD $425.00

The PX-MOD Modbus RTU/ASCII Slave Bus Coupler allows connection of up to 64 terminals per assembly, 255 terminals total, in a Modbus RTU/ ASCII serial network. The PX-MOD communicates using high-level Modbus commands and supports 512 bytes of input data and 512 bytes of output data.

The PX-MOD includes one RS-485 D-sub 9-pin port that functions in half duplex for connection to a Modbus master.

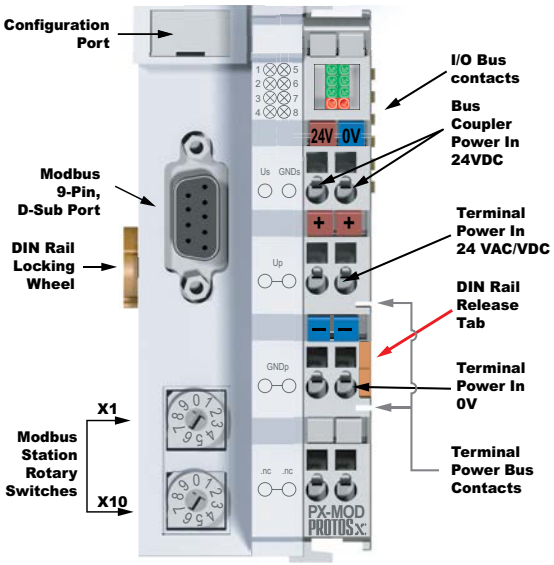

PX-MOD I/O Bus Specifications	
Supply Power for I/O Bus	24VDC (-15%/+20%)
Input Current from Power Supply	70mA + (total I/O bus current) / 4
Recommended Fuse	10A Max
I/O Bus Current Supply	1000mA Max
Number of Bus Terminals Supported	64 per assembly, 255 w/ I/O Bus Expansion (based on power budget)
Number of Discrete Inputs/ Outputs	1020 Inputs and 1020 Outputs with 255 terminals
Number of Analog Inputs/Outputs	256 inputs and 256 outputs
*Maximum Number of Data Bytes**	512 Input Bytes and 512 Output Bytes

*** Total number of terminals cannot exceed 512 input bytes and 512 output bytes.**

PX-MOD Terminal Power Bus Specifications	
Supply Power for Terminal Bus	24 VAC/VDC
Maximum Current	10A
Number of Power Contacts	2 (+24 VAC/DC, 0V)

PX-MOD Modbus Port Specifications	
Number of Stations	99
Station Configuration	Rotary Switches
Protocol	Modbus RTU/ASCII (default = RTU)
Data Transfer Rates	150, 300, 600, 1200, 2400, 4800, 9600, 19200, 38400 baud
Maximum Cable Length	4000 ft. (1,200m)
Connector Type	9-pin, D-Sub, RS-485
Recommended Cable	24AWG, Shielded, Twisted Pair

General Specifications	
Operating Temperature	32° to 131°F (0° to 55 °C)
Storage Temperature	-13° to 185°F (-25° to 85 °C)
Relative Humidity	5% to 95%, non-condensing
Environment Air	No corrosive gases permitted
Mounting/Orientation Restrictions	35mm DIN rail/None
Vibration	Conforms to EN 60068-2-6
Shock	Conforms to EN 60068-2-27
Noise Immunity	Conforms to EN 61000-6-2
Protection Class	IP20
Weight	100g (3.5 oz)
Dimensions (WxHxD)	44mm x 100mm x 66.4 mm (1.73 in x 3.94 in x 2.61 in)
*Agency Approvals**	UL/cUL File No. E157382, CE

*** To obtain the most current agency approval information, see the Agency Approval Checklist section on the specific part number's web page.**

IMPORTANT!

Hot-Swapping Information
Note: This device cannot be Hot Swapped.

Bus Couplers PX-MOD

Configuration Port

The Service Port connector is located under the flip-cover shown. This port is used for communication with the software configuration tool. The software configuration tool auto-configures the Modbus addresses of the I/O terminals and the interface allows the user to:

• Run the configurator • View the configured Modbus addresses • Modify the baud rate

• Change the Modbus offset • Reboot the coupler • Disable or modify Watchdog timer

Requires cable PX-USB-232, with a USB type A connector for the PC and a 4-pin custom micro connector for the Bus Coupler. Works with PX-CFGSW configuration software.

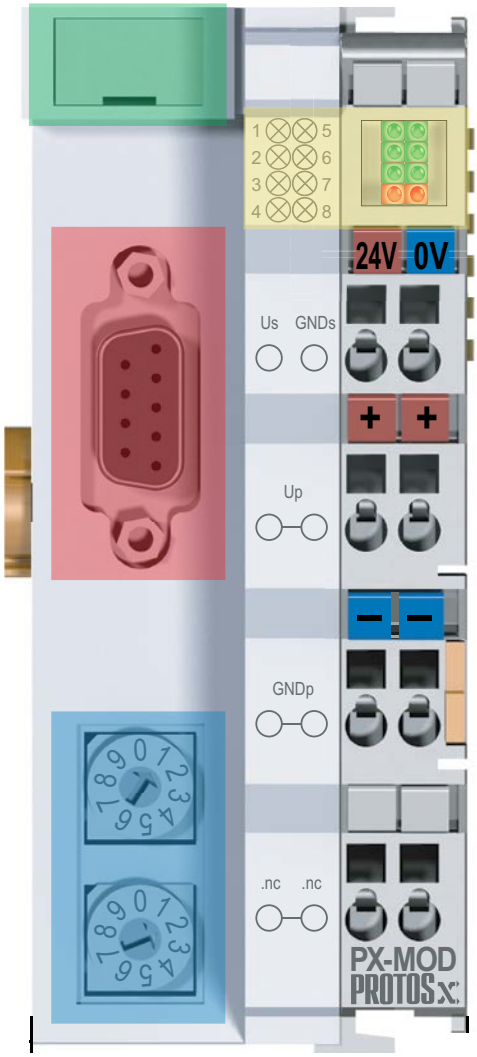

Status LEDs

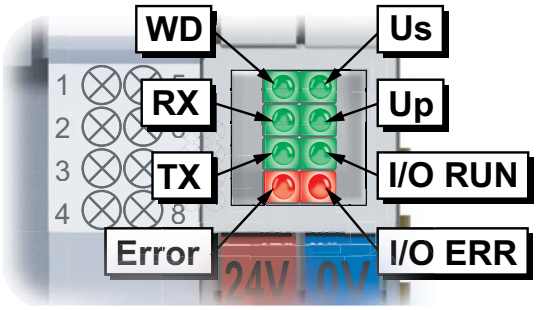

LED Descriptions		
LED	***Status: ON***	***Status: OFF***
Green LED 1: WD	Watchdog is active	Watchdog error
Green LED 2: RX	Data being received	No data being received
Green LED 3: TX	Data being transmitted	No data being transmitted
Red LED 4: ERROR	Data Error, communications with the master device has been lost	No data error or checksum error
Green LED 5: Us	Bus Coupler power on	Bus Coupler power off
Green LED 6: Up	Terminal power on	Terminal power off
Green LED 7: I/O RUN	I/O bus data active	Watchdog-timer overflow
Red LED 8: I/O ERR	I/O bus error, blinking code	No I/O bus error

D-sub 9-pin, RS-485 Connector

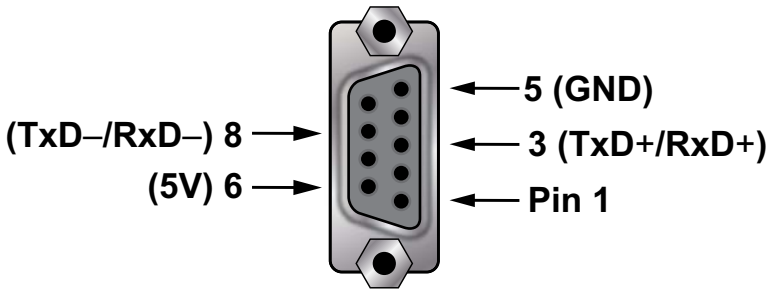

Address Selection - Rotary Switches

The Modbus node address for the PX-MOD is set using both rotary switches on the front of the Coupler. The address is configured within the 01 to 99 range. The configured value of 00 is reserved for programming and configuration.

The lower rotary switch is used to set the tens digit (x10) of the node address. The upper rotary switch is used to set the ones digit (x1) of the node address. The switch address is accepted only when power is cycled. The example shown is configured for a node address of 21.

Bus Couplers PX-MOD

System Considerations

The PX-MOD performs as a Modbus RTU/ASCII slave in a Modbus network. Communication to the master is via a 9-pin D-sub RS-485 port. The maximum distance from the master to the PX-MOD is 4000 feet (1200 meters) using 24 AWG shielded, twisted pair. Termination resistors are required at the beginning and end of the network. It is highly recommended that a dedicated network be used for the Protos X system.

The PX-MOD Bus Coupler supports up to 64 terminals per assembly, 255 with Bus Expansion Couplers. A minimal assembly consists of a PX-MOD Bus Coupler, I/O Terminals and a Bus End Terminal.

An I/O Bus, powered through the Bus Coupler, provides data communication across the terminal assembly via six contacts located on the side walls of the terminals. A Terminal Power Bus provides power for the I/O terminals via two power contacts. A power source of 24VAC or 24VDC must be connected to the Bus Coupler from an external supply.

If additional 24VDC supply is required for terminal wiring, eight points of 24VDC power can be distributed from the Terminal Power Bus using a Power Distribution Terminal (PX-949). This terminal must be mounted to the right of a terminal that passes 24VDC on the power bus. Both I/O Bus communication and terminal bus power are passed through to adjoining terminals.

For expansion beyond a 64-terminal assembly, a Bus Expansion End Terminal (PX-902) is used in place of a standard Bus End Terminal (PX-901). A Bus Expansion Coupler Terminal (PX-903) is used at each expansion assembly in place of a PX-MOD Bus Coupler. Up to 31 Expansion couplers can be used in a group of assemblies. Connection is made between the Expansion Coupler Terminals via standard RJ45 Ethernet patch cable.

It is important to stay within the following three specifications:.

1. Do not exceed the total number of 64 Terminals allowed per Assembly.
2. Do not exceed the total number of 512 Input Bytes and 512 Output Bytes.
3. Do not exceed the Coupler I/O Bus Power Budget of 1000mA as there is no internal current protection.

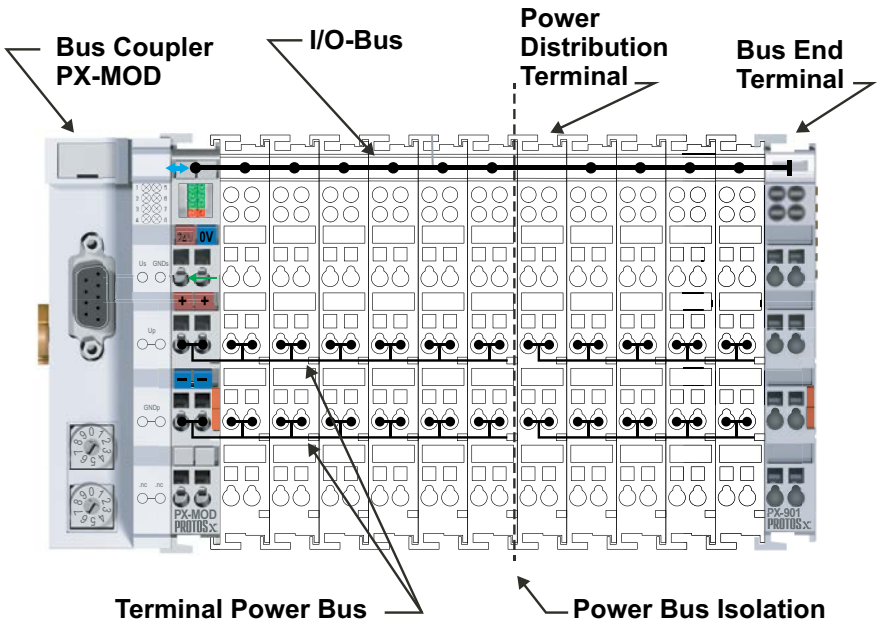

PX-MOD Example Network Diagram

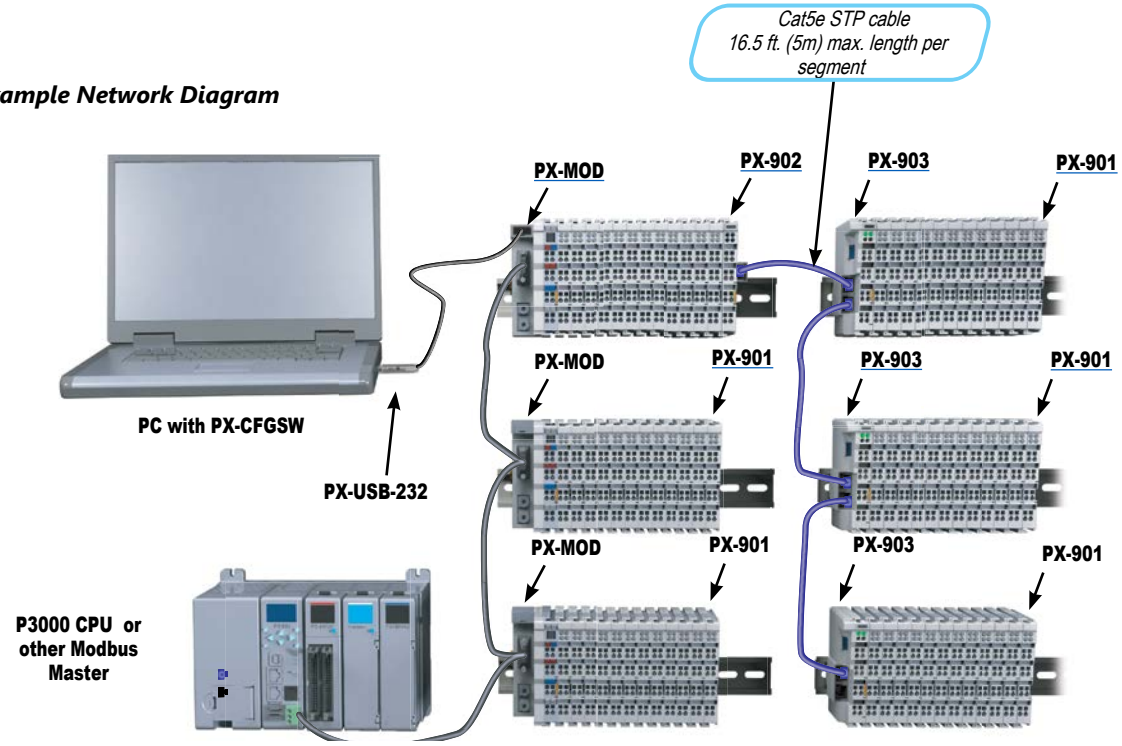

Bus Couplers - PX-MOD

PX-MOD Wiring Connections

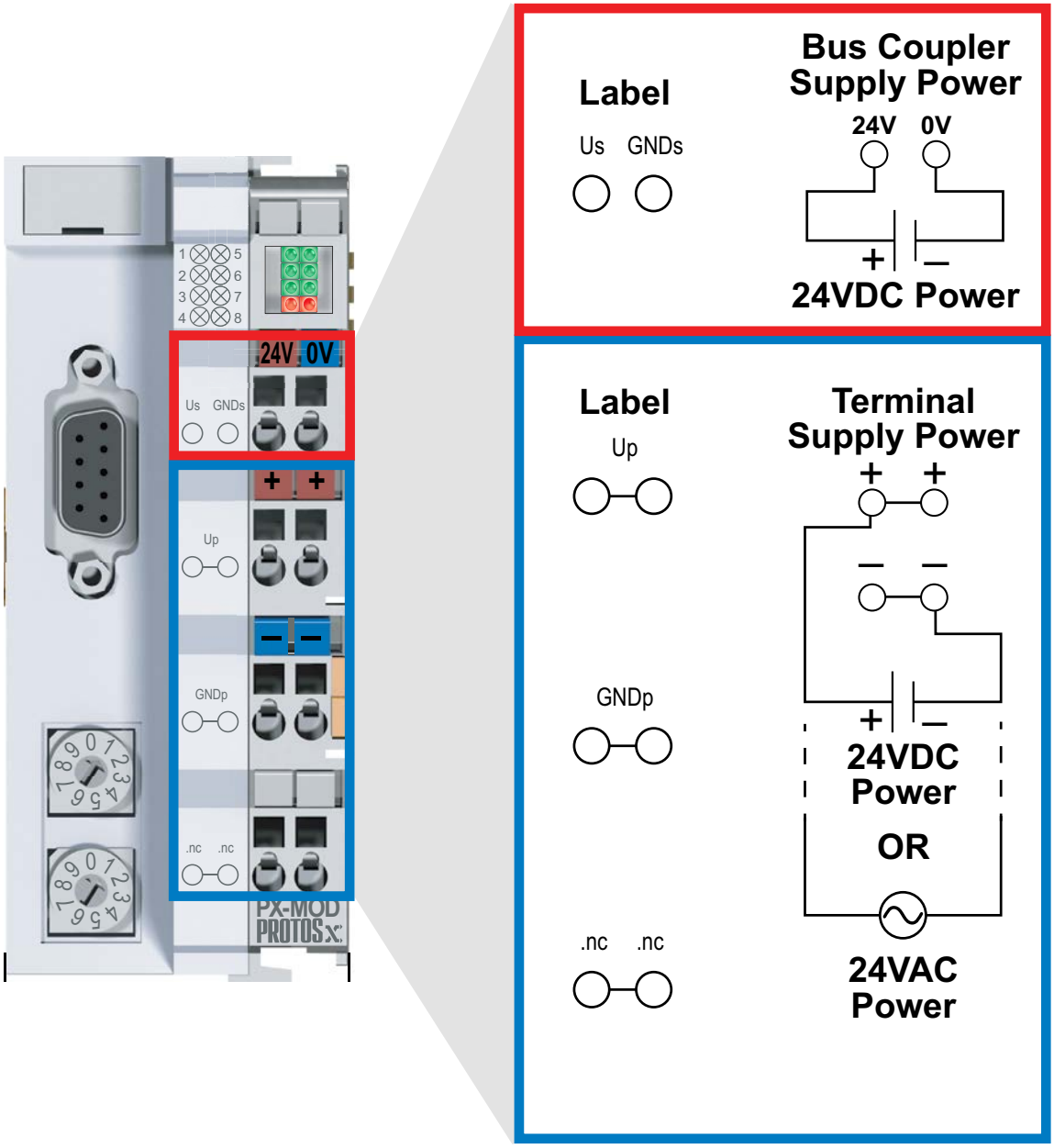

Bus Couplers - PX-TCP1

PX-TCP1 $385.00

The PX-TCP1 Modbus TCP Server Bus Coupler allows connection of up to 64 terminals per assembly, 255 terminals total, in a Modbus TCP network. The PX-TCP1 communicates using high-level Modbus commands and supports 512 bytes of input data and 512 bytes of output data.

The PX-TCP1 includes one RJ45 Ethernet 10/100 Base-T port for connection to a Modbus client.

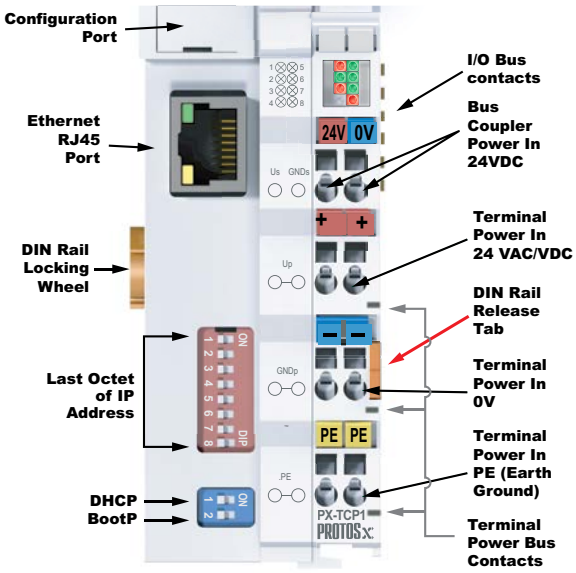

PX-TCP1 I/O Bus Specifications	
Supply Power for I/O Bus	24VDC (-15%/+20%)
Input Current from Power Supply	70mA + (total I/O bus current) / 4
Recommended Fuse	10A Max
I/O Bus Current Supply	1000mA Max
Number of Bus Terminals Supported	64 per assembly, 255 w/ I/O Bus Expansion (based on power budget)
Number of Discrete Inputs/ Outputs	1020 Inputs and 1020 Outputs with 255 terminals
Number of Analog Inputs/ Outputs	128 total
*Maximum Number of Data Bytes**	512 Input Bytes and 512 Output Bytes

*** Total number of terminals cannot exceed 512 input bytes and 512 output bytes.**

PX-TCP1 Terminal Power Bus Specifications	
Supply Power for Terminal Bus	24 VAC/VDC
Maximum Current	10A
Number of Power Contacts	3 (+24 VAC/VDC, 0V, PE)

PX-TCP1 Modbus Port Specifications	
Configuration	DIP switches and PX-CFGSW software
Protocol	Modbus TCP
Data Transfer Rates	10/100 Mbaud
Maximum Cable Length	100m between Coupler and switch
Connector Type	Ethernet, RJ45
Recommended Cable	Shielded, Twisted Pair, Cat5e

General Specifications	
Operating Temperature	32° to 131°F (0° to 55 °C)
Storage Temperature	-13° to 185°F (-25° to 85 °C)
Relative Humidity	5% to 95%, non-condensing
Environment Air	No corrosive gases permitted
Mounting/Orientation Restrictions	35mm DIN rail/None
Vibration	Conforms to EN 60068-2-6
Shock	Conforms to EN 60068-2-27
Noise Immunity	Conforms to EN 61000-6-2
Protection Class	IP20
Weight	100g (3.5 oz)
Dimensions (WxHxD)	44mm x 100mm x 66.4 mm (1.73 in x 3.94 in x 2.61 in)
*Agency Approvals**	UL/cUL File No. E157382, CE

*** To obtain the most current agency approval information, see the Agency Approval Checklist section on the specific part number's web page.**

IMPORTANT!

Hot-Swapping Information
Note: This device cannot be Hot Swapped.

Bus Couplers - PX-TCP1

Configuration Port

The Service Port connector is located under the flip-cover shown. This port is used for communication with the software configuration tool. The software configuration tool autoconfigures the Modbus addresses of the I/O terminals and the interface allows the user to:

• Run the configurator • View the configured Modbus addresses • Modify the baud rate • Reboot the coupler

• Change the Modbus offset • Configure first three octets of the IP address • Disable or modify Watchdog timer

Requires cable PX-USB-232, with a USB type A connector for the PC and a 4-pin custom micro connector for the Bus Coupler. Works with PX-CFGSW configuration software.

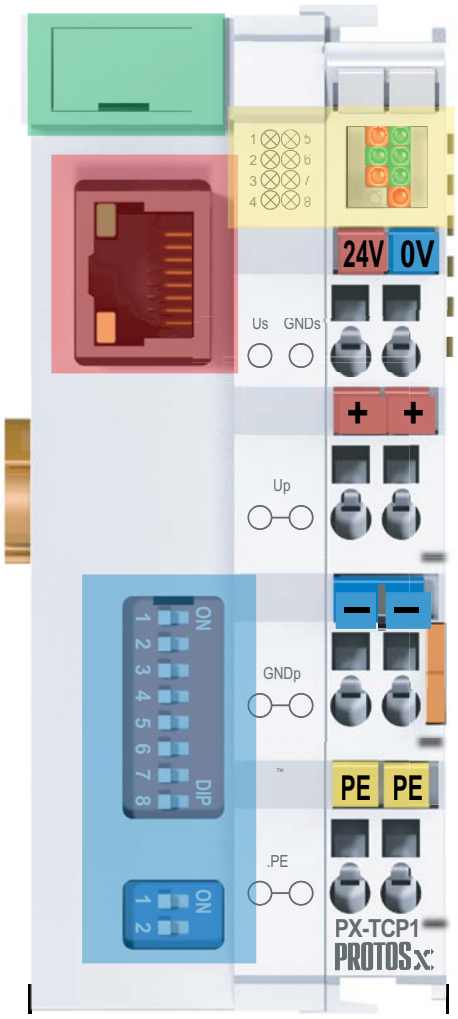

Status LEDs

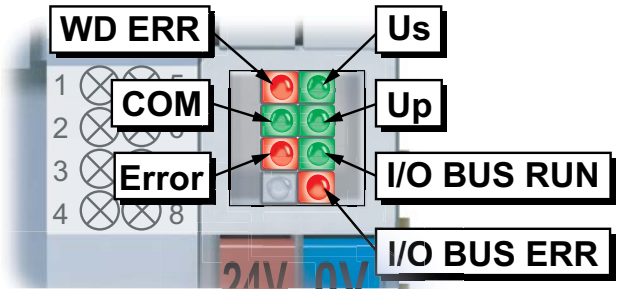

LED Descriptions

LED	Status: ON	Status: OFF
Red LED 1: WD ERR	Watchdog error	Watchdog is active after first Modbus write
Green LED 2: COM	Ethernet data is active (On or Flashing)	No data being received
Red LED 3: ERROR	Flashing: waiting for IP address if set to DHCP or BootP	No error
Green LED 4: RTE	Not used	
Green LED 5: Us	Bus Coupler power on	Bus Coupler power off
Green LED 6: Up	Terminal power on	Terminal power off
Green LED 7: I/O-Bus RUN	I/O bus data active (On or Flashing)	No I/O bus activity
Red LED 8: I/O-Bus ERR	I/O bus error, blinking code	No I/O bus error

RJ45 Connector

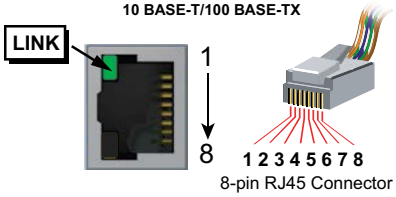

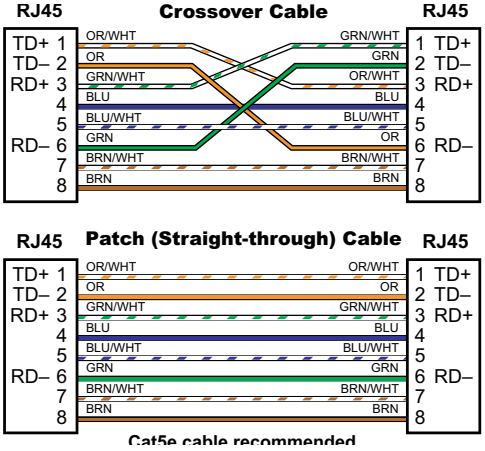

Address Selection - DIP Switches

The last octet or byte of the IP Address for the PX-TCP1 is set using the large bank of DIP switches on the front of the coupler. The smaller bank of DIP switches is used to select the type of address assignment (DHCP, BootP, firm setting).

The IP Address DIP switches are arranged so that switch 1 corresponds to bit 0 (LSB) and switch 8 to bit 7 (MSB). The base address used is configured using the PX-CFGSW software tool. With the original factory settings, the IP Address is configured to the value 0.0.0.0. by default.

Bus Couplers - PX-TCP1

System Considerations

The PX-TCP1 performs as a Modbus TCP server in a Modbus network. Communication to the client is via an RJ45 Ethernet port. The maximum distance from the client to the PX-TCP1 is 330 feet (100 meters) using 24 AWG shielded, twisted pair Cat5e cable. It is highly recommended that a dedicated network be used for the Protos X system.

The PX-TCP1 Bus Coupler supports up to 64 terminals per assembly, 255 with Bus Expansion Couplers. A minimal assembly consists of a PX-TCP1 Bus Coupler, I/O Terminals and a Bus End Terminal.

An I/O Bus, powered through the Bus Coupler, provides data communication across the terminal assembly via six contacts located on the side walls of the terminals. A Terminal Power Bus provides power for the I/O terminals via three contacts; 24V, 0V and PE. A power source of 24VAC or 24VDC must be connected to the Bus Coupler from an external supply. The PE Bus is available for terminals that support PE connectivity.

If additional 24VDC supply is required for terminal wiring, eight points of 24VDC power can be distributed from the Terminal Power Bus using a Power Distribution Terminal (PX-949). This terminal must be mounted to the right of a terminal that passes 24VDC on the power bus. Both I/O Bus communication and terminal bus power are passed through to adjoining terminals.

For expansion beyond a 64-terminal assembly, a Bus Expansion End Terminal (PX-902) is used in place of a standard Bus End Terminal (PX-901). A Bus Expansion Coupler Terminal (PX-903) is used at each expansion assembly in place of a PX-TCP1 Bus Coupler. Up to 31 Expansion couplers can be used in a group of assemblies. Connection is made between the Expansion Coupler Terminals via standard RJ45 Ethernet patch cable.

It is important to stay within the following three specifications:.

1. Do not exceed the total number of 64 Terminals allowed per Assembly.
2. Do not exceed the total number of 512 Input Bytes and 512 Output Bytes.
3. Do not exceed the Coupler I/O Bus Power Budget of 1000mA as there is no internal current protection.

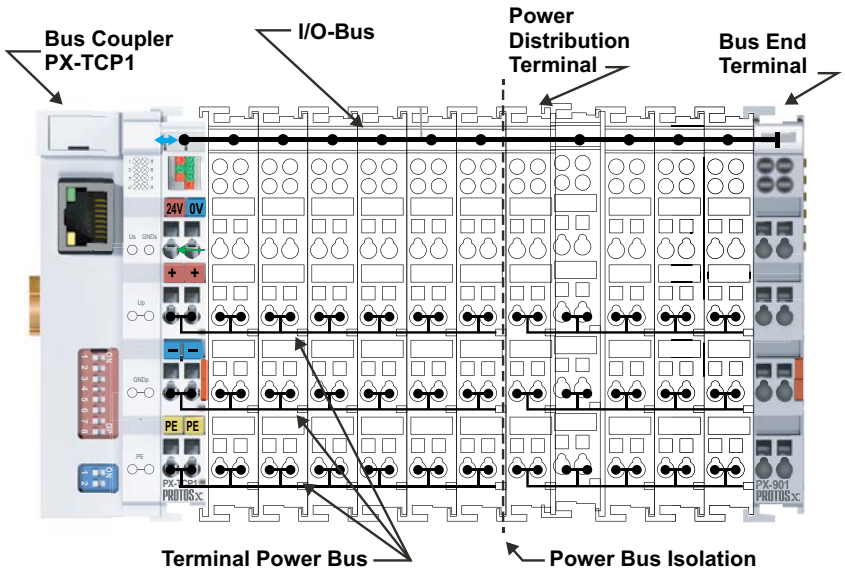

PX-TCP1 Example Network Diagram

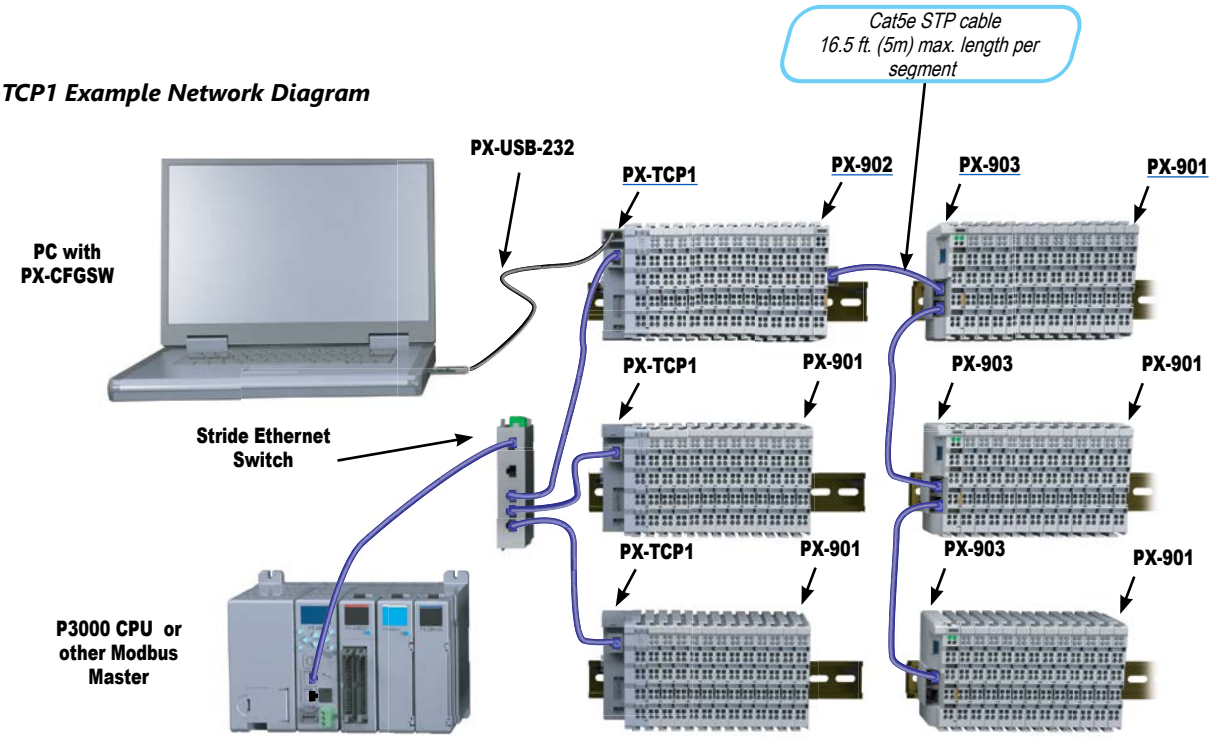

Bus Couplers - PX-TCP1

PX-TCP1 Wiring Connections

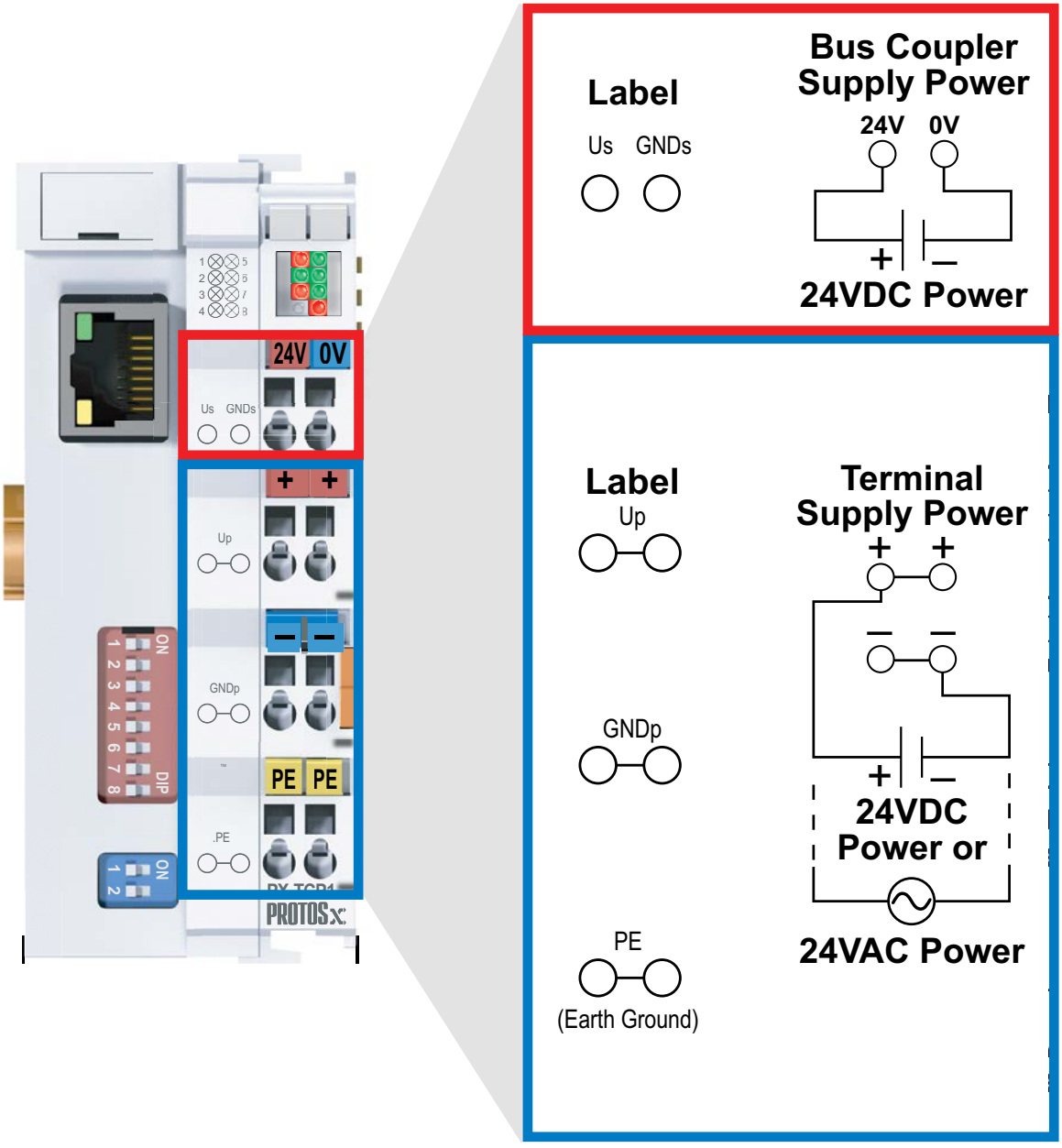

Bus Couplers - PX-TCP2

PX-TCP2 $607.00

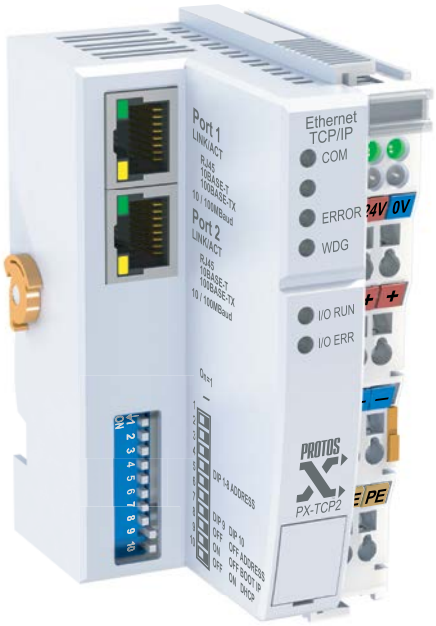

The PX-TCP2 Modbus TCP Server Bus Coupler allows connection of up to 64 terminals in a Modbus TCP network. The PX-TCP2 communicates using high-level Modbus commands and supports 512 bytes of input data and 512 bytes of output data.

The PX-TCP2 includes two RJ45 Ethernet 10/100 Base-T ports for connection to a Modbus client.

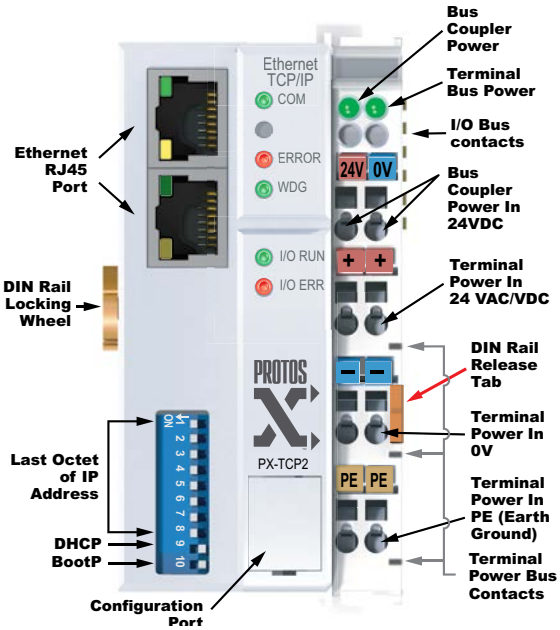

PX-TCP2 I/O Bus Specifications	
Supply Power for I/O Bus	24VDC (-15%/+20%)
Input Current from Power Supply	70mA + (total I/O bus current) / 4
Recommended Fuse	10A Max
I/O Bus Current Supply	1750mA Max
Number of Bus Terminals Supported	64 per assembly (based on power budget)
Number of Discrete Inputs/ Outputs	512 Inputs and 512 Outputs
Number of Analog Inputs/ Outputs	128 total
*Maximum Number of Data Bytes**	512 Input Bytes and 512 Output Bytes

*** Total number of terminals cannot exceed 512 input bytes and 512 output bytes.**

PX-TCP2 Terminal Power Bus Specifications	
Supply Power for Terminal Bus	24 VAC/VDC
Maximum Current	10A
Number of Power Contacts	3 (+24 VAC/VDC, 0V, PE)

PX-TCP2 Modbus Port Specifications	
Configuration	DIP switches and PX-CFGSW software
Protocol	Modbus TCP
Data Transfer Rates	10/100 Mbaud
Maximum Cable Length	100m between Client and Coupler to Coupler
Connector Type	Ethernet, 2 x RJ45 (2 Channel Switch)
Recommended Cable	Shielded, Twisted Pair, Cat5e

General Specifications	
Operating Temperature	32° to 131°F (0° to 55 °C)
Storage Temperature	-13° to 185°F (-25° to 85 °C)
Relative Humidity	5% to 95%, non-condensing
Environment Air	No corrosive gases permitted
Mounting/Orientation Restrictions	35mm DIN rail/None
Vibration	Conforms to EN 60068-2-6
Shock	Conforms to EN 60068-2-27
Noise Immunity	Conforms to EN 61000-6-2
Protection Class	IP20
Weight	170g (6.0 oz)
Dimensions (WxHxD)	51mm x 100mm x 66.4 mm (2.01 in x 3.94 in x 2.61 in)
*Agency Approvals**	UL/cUL File No. E157382, CE

***** To obtain the most current agency approval information, see the Agency Approval Checklist section on the specific part number's web page.

IMPORTANT!

Hot-Swapping Information
Note: This device cannot be Hot Swapped.

Bus Couplers - PX-TCP2

Configuration Port

The Service Port connector is located under the flip-cover shown. This port is used for communication with the software configuration tool. The software configuration tool autoconfigures the Modbus addresses of the I/O terminals and the interface allows the user to:

• Run the configurator • View the configured Modbus addresses • Modify the baud rate • Reboot the coupler • Change the Modbus offset • Configure first three octets of the IP address • Disable or modify Watchdog timer

Requires cable PX-USB-232, with a USB type A connector for the PC and a 4-pin custom micro connector for the Bus Coupler. Works with PX-CFGSW configuration software.

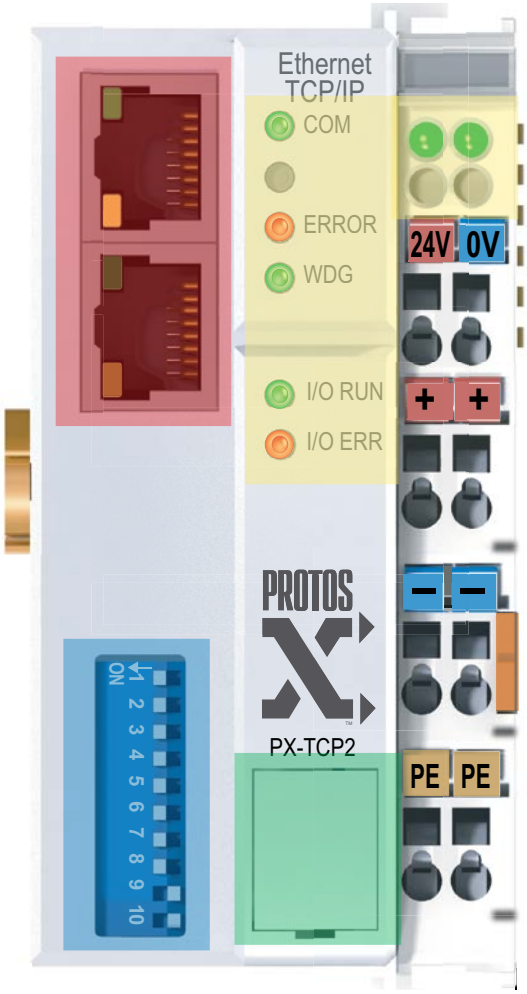

Status LEDs

LED Descriptions		
LED	Status: ON	Status: OFF
Green Power LED (left): Bus Coupler	Bus Coupler power on	Bus Coupler power off
Green Power LED (right): Terminal Bus	Terminal Bus power on	Terminal Bus power off
Green Ethernet LED: COM	On/Flashing: Receiving Data	No data being received
Red Ethernet LED: ERROR	Flashing: waiting for IP address if set to DHCP or BootP	No Error
Green Ethernet LED: WDG	Watchdog is active	Watchdog error
Green I/O Bus LED: I/O RUN	I/O Bus Data Active (On or Flashing)	Terminal power off
Red I/O Bus LED: I/O ERR	I/O Bus error, blinking code	No I/O bus error

RJ45 Connectors

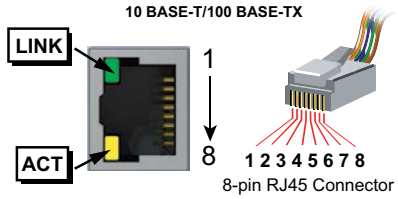

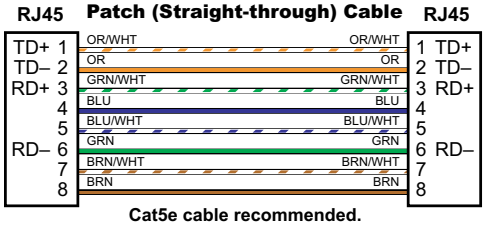

Cat5e cable recommended.

Address Selection - DIP Switches

The last octet or byte of the IP Address, as well as the type of address assignment (DHCP, BootP, firm setting), for the PX-TCP2 is set using the DIP switches on the front of the coupler.

The IP Address DIP switches are arranged so that switch 1 corresponds to bit 0 (LSB) and switch 8 to bit 7 (MSB). Switches 9 and 10 allow for the address assignment selection. The base address used is configured using the PX-CFGSW software tool. With the original factory settings, the IP Address is configured to the value 0.0.0.0. by default.

Bus Couplers - PX-TCP2

System Considerations

The PX-TCP2 performs as a Modbus TCP server in a Modbus network. Communication to the client is via an RJ45 Ethernet port. A second port allows expansion of up to 20 total PX-TCP2 Couplers in a network. The maximum distance from a client to a PX-TCP2, and between each additional PX-TCP2, is 330 feet (100 meters) for each segment, using 24 AWG shielded, twisted pair Cat5e cable. It is highly recommended that a dedicated network be used for the Protos X system.

The PX-TCP2 Bus Coupler supports up to 64 terminals per assembly. It is not compatible with Bus Expansion Couplers. A minimal assembly consists of a PX-TCP2 Bus Coupler, I/O Terminals and a Bus End Terminal (PX-901).

An I/O Bus, powered through the Bus Coupler, provides data communication across the terminal assembly via six contacts located on the side walls of the terminals. A Terminal Power Bus provides power for the I/O terminals via three contacts; 24V, 0V and PE. A power source of 24VAC or 24VDC must be connected to the Bus Coupler from an external supply. The PE Bus is available for terminals that support PE connectivity.

If additional 24VDC supply is required for terminal wiring, eight points of 24VDC power can be distributed from the Terminal Power Bus using a Power Distribution Terminal (PX-949). This terminal must be mounted to the right of a terminal that passes 24VDC on the power bus. Both I/O Bus communication and terminal bus power are passed through to adjoining terminals.

It is important to stay within the following three specifications.

1. Do not exceed the total number of 64 Terminals allowed per Assembly.
2. Do not exceed the total number of 512 Input Bytes and 512 Output Bytes.
3. Do not exceed the Coupler I/O Bus Power Budget of 1750mA as there is no internal current protection.

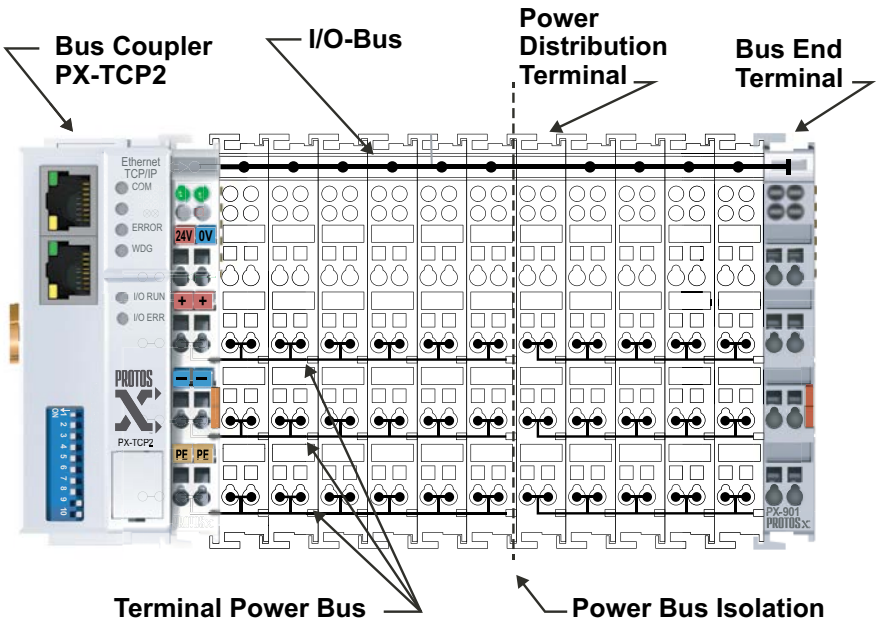

PX-TCP2 Example Network Diagram

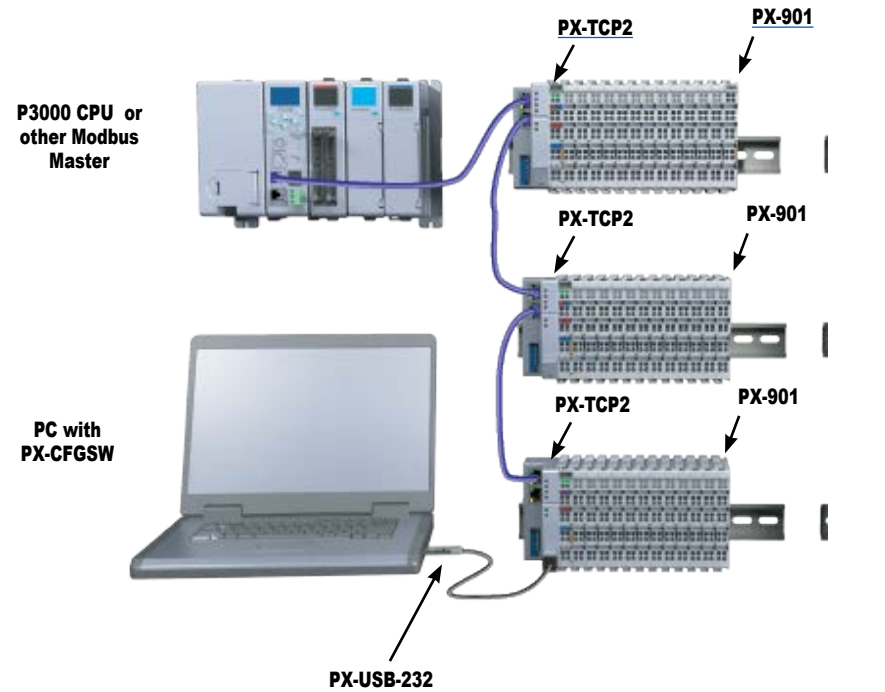

Bus Couplers - PX-TCP2

PX-TCP2 Wiring Connections

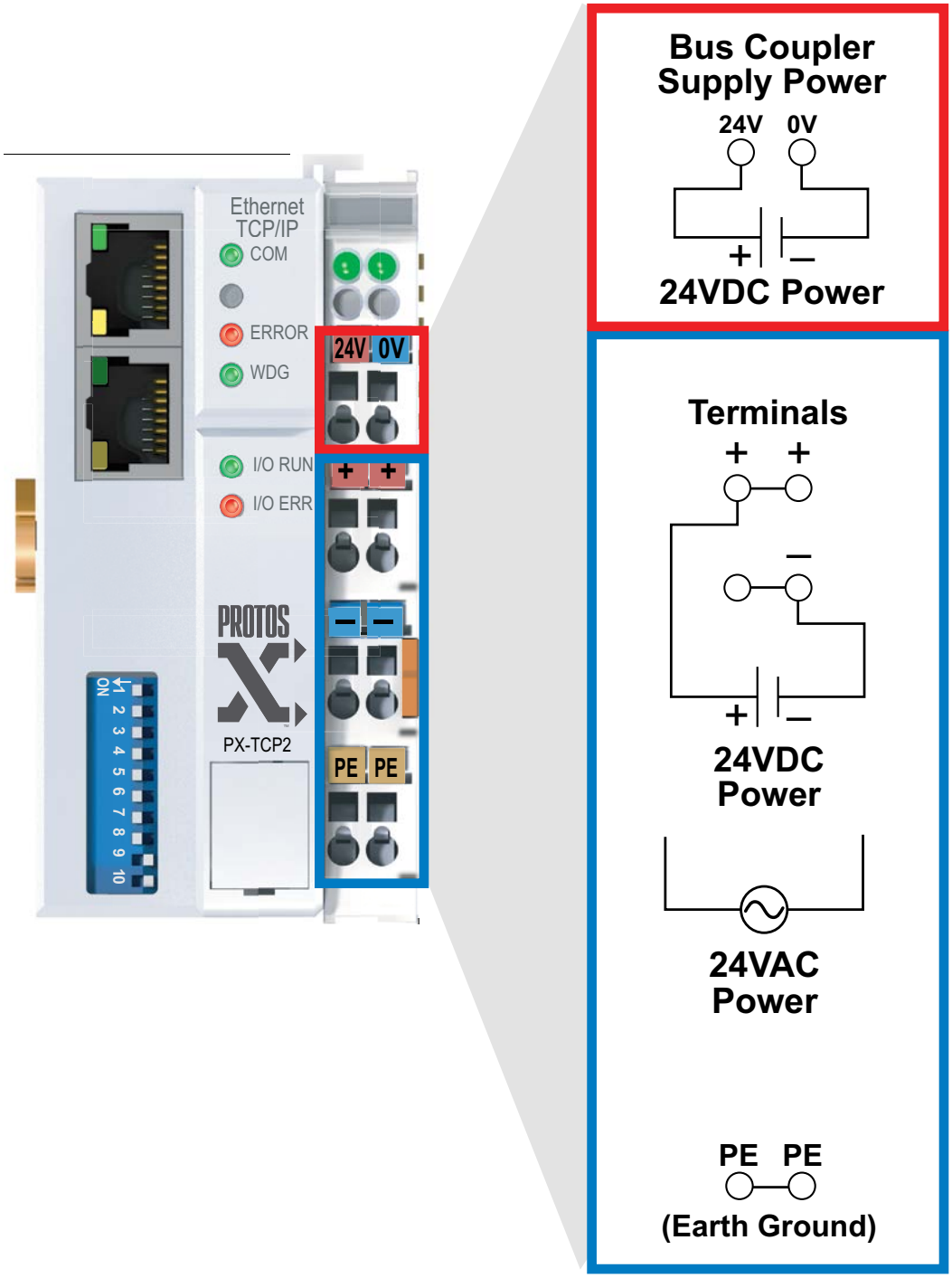

Bus Couplers - PX-EIP1

PX-EIP1 $385.00

The PX-EIP1 EtherNet/IP Bus Coupler server allows connection of up to 64 terminals per assembly, 255 terminals total with I/O bus expansion. The PX-EIP1 module has one RJ45 Ethernet 10/100 Base T port for connection to an Ethernet client. Use with the Protos X I/O System.

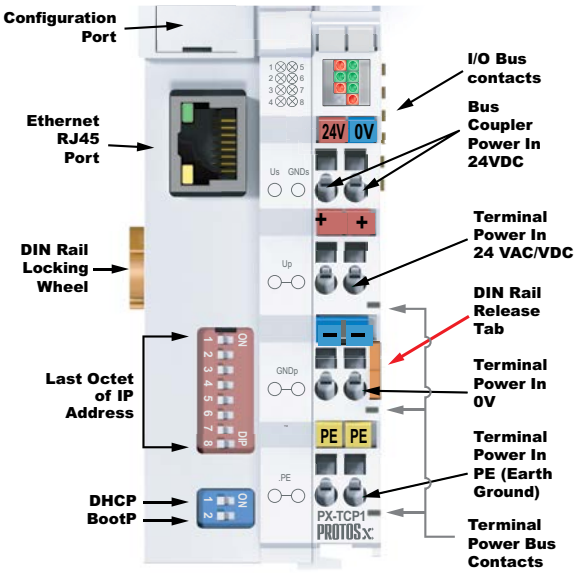

PX-EIP1 I/O Bus Specifications	
Supply Power for I/O Bus	24VDC (-15%/+20%)
Input Current from Power Supply	70mA + (total I/O bus current) / 4
Recommended Fuse	10A Max
I/O Bus Current Supply	1000mA Max
Number of Bus Terminals Supported	64 per assembly, 255 w/ I/O Bus Expansion (based on power budget)
Number of Discrete Inputs/ Outputs	1020 Inputs and 1020 Outputs with 255 terminals
Number of Analog Inputs/Outputs	128 total
Maximum Number of Data Bytes*	512 Input Bytes and 512 Output Bytes

** Total number of terminals cannot exceed 512 input bytes and 512 output bytes.*

PX-EIP1 Terminal Power Bus Specifications	
Supply Power for Terminal Bus	24VDC
Maximum Current	10A
Number of Power Contacts	3 (+24 VAC/VDC, 0V, PE)

PX-EIP1 Ethernet Port Specifications	
Configuration	DIP switches and PX-CFGSW software
Protocol	EtherNet/IP (Supports Implicit Messaging only)
Scanner/Client Connections	1
Data Transfer Rates	10/100 Mbps (Auto-crossover)
Maximum Cable Length	100m between coupler and switch
Connector Type	Ethernet, RJ45
Recommended Cable	Shielded, Twisted Pair, Cat5e

PX-EIP1 General Specifications	
Operating Temperature	32° to 131°F (0° to 55 °C)
Storage Temperature	-13° to 185°F (-25° to 85 °C)
Relative Humidity	5% to 95%, non-condensing
Environment Air	No corrosive gases permitted
Mounting / Orientation Restrictions	35mm DIN rail / None
Vibration	Conforms to EN 60068-2-6
Shock	Conforms to EN 60068-2-27
Noise Immunity	Conforms to EN 61000-6-2
Noise Emission	Conforms to EN 61000-6-4
Protection Class	IP20
Weight	100g (3.5 oz)
Dimensions (WxHxD)	44 x 100 x 66.4 mm (1.73 x 3.94 x 2.61 in)
Agency Approvals*	UL/cUL File No. E172151 (BK9055), CE

** To obtain the most current agency approval information, see the Agency Approval Checklist section on the specific part number's web page.*

IMPORTANT!

Hot-Swapping Information

Note: This device cannot be Hot Swapped.

Bus Couplers - PX-EIP1

Configuration Port

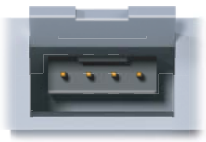

The Service Port connector is located under the flip-cover shown (previous page graphic). This port is used for communication with the software configuration tool. The software configuration tool auto-configures the EtherNet/IP addresses of the I/O terminals while the interface allows the user to:

• Run the configurator • View the configured EtherNet/IP addresses • Reboot the coupler • Configure first three octets of the IP address

Requires cable PX-USB-232, with a USB 2.0 type A connector for the PC and a 4-pin custom micro connector for the Bus Coupler. Works with PX-CFGSW configuration software.

Status LEDs

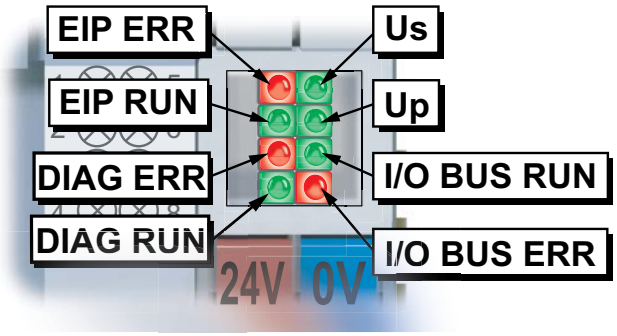

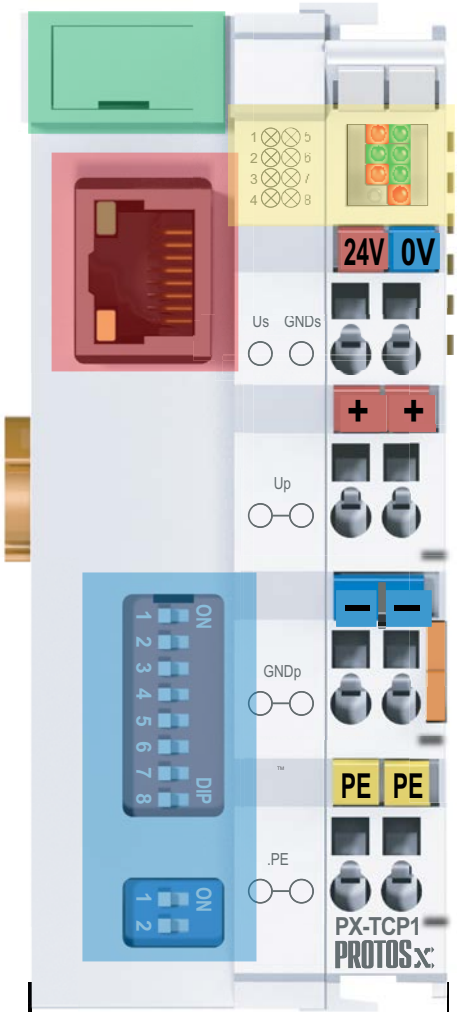

LED Descriptions		
LED	Status: ON	Status: OFF
Red LED 1: EIP ERR	See PX-CFGSW Help file or PX-USER-M manual for codes.	No EIP Error
Green LED 2: EIP Run	EIP Communication with Scanner (Client) Flashing: No active communication.	N/A
Red LED 3: DIAG Err	See PX-CFGSW Help File or PX-USER-M manual for codes.	No DIAG Err
Green LED 4: DIAG Run	Diagnostics active w/o error Flashing: Used in conjunction with Diag Error to determine fault.	N/A
Green LED 5: Us	Bus coupler power On	Bus coupler power Off
Green LED 6: Up	Terminal power On	Terminal power Off
Green LED 7: I/O Bus RUN	I/O bus data active (On or Flashing)	No I/O bus activity
Red LED 8: I/O Bus Err	I/O bus error, blinking code	No I/O bus error

RJ45 Connector

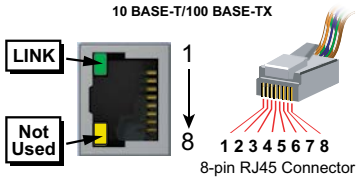

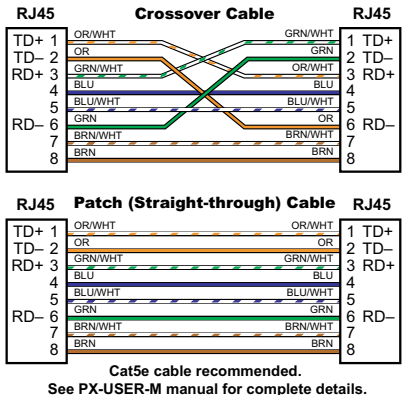

Cat5e cable recommended.
See PX-USER-M manual for complete details.

LED Status		
Green LINK LED	ON = Connection Good	Flashing = Comm Active

Address Selection - DIP Switches

The last octet or byte of the IP Address for the PX-EIP1 is set using the large bank of DIP switches on the front of the coupler. The smaller bank of DIP switches is used to select the type of address assignment (DHCP, BootP, firm setting).

The IP Address DIP switches set the fourth octet of the address and are arranged so that switch 1 corresponds to bit 0 (LSB) and switch 8 to bit 7 (MSB). The base address used is configured using the PX-CFGSW software tool. With the original factory settings, the IP Address is configured to the value 0.0.0.0. by default.

Bus Couplers - PX-EIP1

System Considerations

The PX-EIP1 performs as an EtherNet/IP server in an EtherNet/IP network. Communication to the client is via an RJ45 Ethernet port. The maximum distance from the client to the PX-EIP1 is 330 feet (100 meters) using 24 AWG shielded, twisted pair Cat5e cable. It is highly recommended that a dedicated network be used for the Protos X system.

The PX-EIP1 Bus Coupler supports up to 64 terminals per assembly, 255 with Bus Expansion Couplers. A minimal assembly consists of a PX-EIP1 Bus Coupler, I/O Terminals and a Bus End Terminal.

The PX-EIP1 automatically assigns EtherNet/IP addresses for inputs and outputs to the image register. The maximum number of data is 512 bytes of input data and 512 bytes of output data, with up to 1020 inputs, 1020 outputs, and 128 analog inputs or outputs, when using bus expansion.

An I/O Bus, powered through the Bus Coupler, provides data communication across the terminal assembly via six contacts located on the side walls of the terminals. This bus also supplies low voltage power to the I/O terminals. The I/O Bus supply is rated at a maximum of 1000mA that must be taken into consideration when planning an assembly. Each terminal has an I/O bus current consumption listing that can be used to determine the total I/O bus current. The maximum I/O bus current of the coupler must not be exceeded as there is no internal overcurrent protection.

A Terminal Power Bus provides power for the I/O terminals via three contacts; 24V, 0V and PE. A power source of 24VAC or 24VDC must be connected to the Bus Coupler from an external supply. The PE Bus is available for terminals that support PE connectivity.

A variety of Power Terminals are available for isolating, changing or supplying power to the I/O terminals.

For isolating voltages across the Terminal Power Bus, a Power Separation Terminal (PX-908) is used. This terminal separates the Terminal Power contacts but passes I/O Bus communication.

If additional 24VDC supply is required for terminal wiring, eight points of 24VDC power can be distributed from the Terminal Power Bus using a Power Distribution Terminal (PX-949). This terminal must be mounted to the right of a terminal that passes 24VDC on the power bus. Both I/O Bus communication and terminal bus power are passed through to adjoining terminals.

To connect field power to the Terminal Power Bus, or to change from one voltage to another, Power Feed Terminals (PX-940 & PX-970) are used. Power Feed Terminals are available in 24VDC or 120–230VAC, and provide power to I/O Terminals located to the right of the Power Feed Terminal. This terminal passes I/O Bus communication. Power Terminals do not consume any addresses.

For expansion beyond a 64-terminal assembly, a Bus Expansion End Terminal (PX-902) is used in place of a standard Bus End Terminal (PX-901). A Bus Expansion Coupler Terminal (PX-903) is used at each expansion assembly in place of a PX-EIP1 Bus Coupler. Up to 31 Expansion couplers can be used in a group of assemblies. Connection is made between the Expansion Coupler Terminals via standard RJ45 Ethernet patch cable.

It is important to stay within the following three specifications:.

1. Do not exceed the total number of 64 Terminals allowed per Assembly.
2. Do not exceed the total number of 512 Input Bytes and 512 Output Bytes.
3. Do not exceed the Coupler I/O Bus Power Budget of 1000mA as there is no internal current protection.

For complete assembly instructions see the PX-USER-M manual.

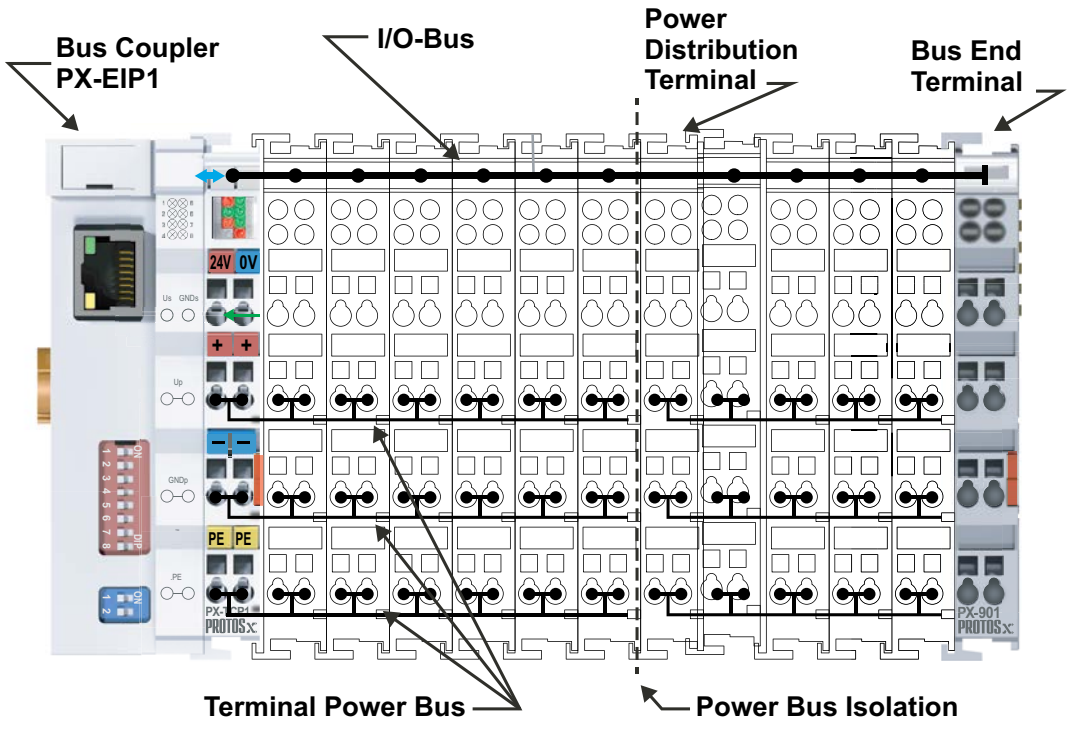

Bus Couplers - PX-EIP1

PX-EIP1 Example Network Diagram

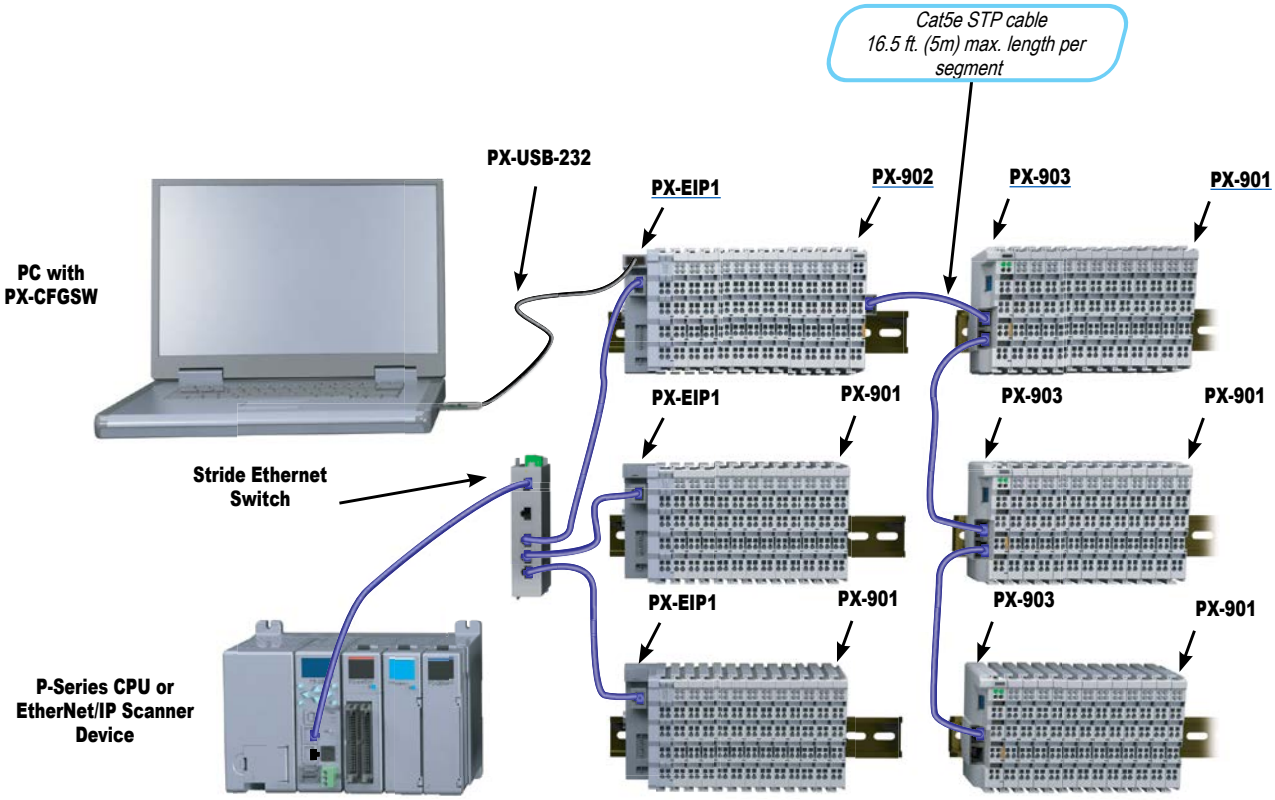

Bus Couplers - PX-EIP1

PX-EIP1 Wiring Connections

Wire connection is made through a spring clamp style terminal. This terminal is designed for a single-conductor solid or stranded wire. Wire connection is made by firmly pushing the screwdriver into the screwdriver slot, inserting the wire into the wire slot and removing the screwdriver, locking the wire into position.

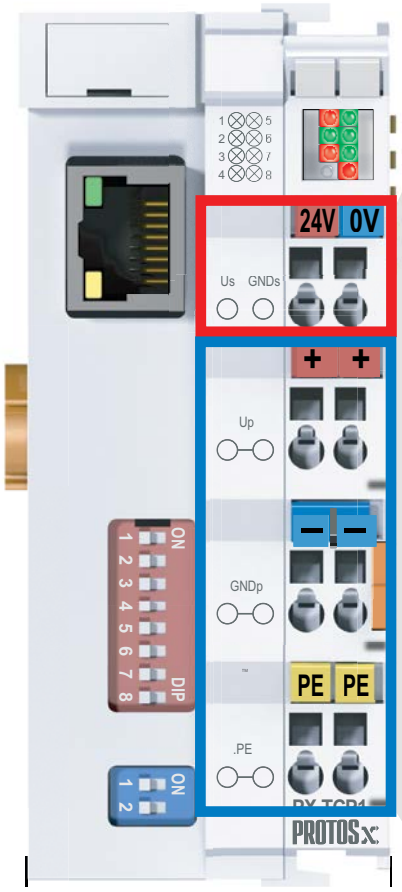

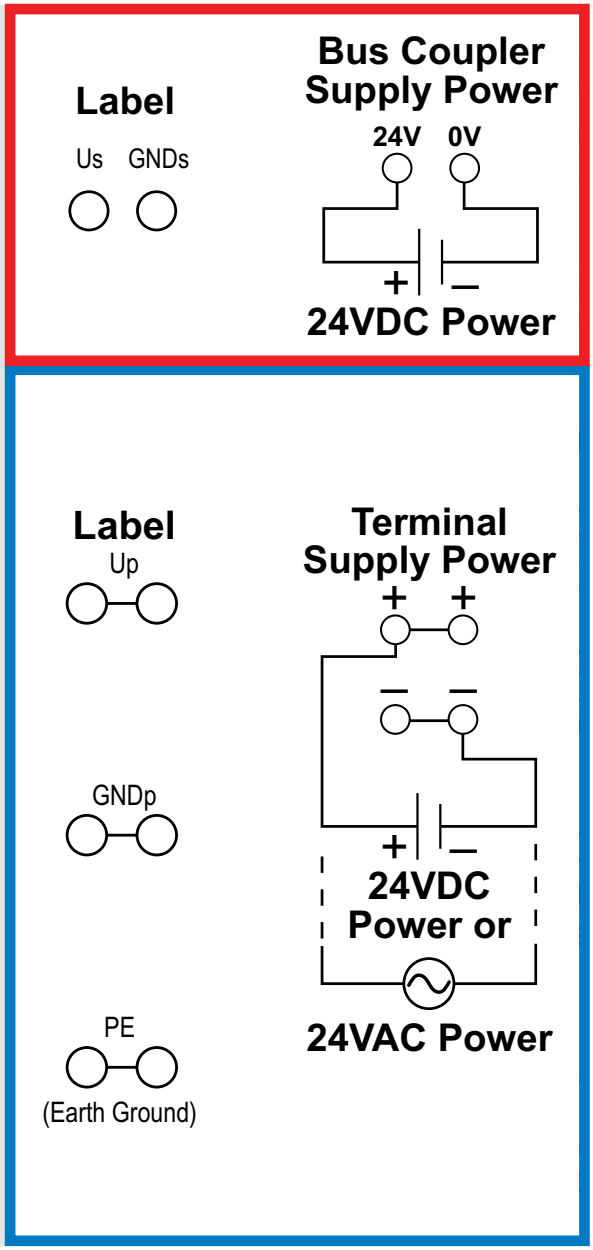

Wiring Specifications	
Connection Type	Spring Clamp Terminals
Wire Gauge /Wire Cross-Section	28–14 AWG / 0.08–2.5 mm2
Screwdriver Width	Use screwdriver width 2.5 mm (0.10) such as our TW-SD-MSL-2
Wire Stripping Length	8mm (5/16 in)

Power Budget Planning

Managing Power Resources

When determining the types and quantity of terminals you will be using, it is important to remember there is a defined amount of I/O Bus Current supplied from the Bus Coupler. There are also defined limits for each external source.

The chart on the next page indicates the power supplied and used by each Protos X component. The chart below shows an example of how to calculate the power used by your particular system. These charts should make it easy for you to determine if the devices you have chosen will operate within the power budget of your system configuration.

If the I/O terminals you have chosen exceed the maximum power available from the Bus Coupler, you may be able to resolve the problem by using expansion terminals.

Power Budget Example

The example below shows how to calculate the power budget for a typical ProtosX system. This example is constructed using a PX-MOD Bus Coupler and six I/O Terminals. It is recommended you construct a similar table for your system. Follow the steps below to determine your power budget.

A	Column 1	Column 2	Column 3
	Terminal	***Terminal Type***	***I/O Bus (from Coupler)***
B	***CURRENT SUPPLIED***		
	PX-MOD	Bus Coupler	1000mA
C	***CURRENT REQUIRED***		
	PX-144 PX-172-1 PX-322-1 PX-312 PX-244-1 PX-412	4 pt DC Discrete Input 2 pt AC Discrete Input 2 ch RTD Input 2 ch DC Analog Input 4 pt DC Discrete Output 2 ch DC Analog Output	5mA 3mA 60mA 65mA 9mA 75mA
D	***Maximum Current Required***		217mA
E	***Remaining Current Available***		783mA

1. Using a chart similar to this one, fill in columns 1 and 2.
2. Using the tables on the next page enter the current supplied and current used by each device (column 3).
3. Add together the current used by the system (row C) for column 3 and put the total in the row labeled "Maximum Current Required" (row D).
4. Subtract the calculated "Maximum Current Required" (row D), from the "Current Supplied" and place the difference in the row labeled "Remaining Current Available" (row E).
5. If "Maximum Current Required" is greater than "Current Supplied" in column 3, the power budget will be exceeded. It will be unsafe to use this configuration, and you will need to restructure your I/O configuration.

Power Requirements

Power Supplied and Consumed

These tables show the amount of power supplied by each of the Bus Couplers and the amount of power consumed by each I/O device. The Power Consumed chart lists how much power is drawn from the I/O Bus, Terminal Power Bus (externally supplied) and from the Load (when using output terminals). Use this information when calculating the power budget for your system.

Power Supplied	
Device	***5V(mA) I/O Bus Supply***
Coupler	
PX-MOD	1000 Max
PX-TCP1	1000 Max
PX-TCP2	1750 Max
PX-EIP1	1000 Max
Bus Expansion Coupler	
PX-903	400 Max

Power Consumed			
Device	***5V(mA) from I/O Bus***	***(mA) from Terminal Power Bus***	***(mA) from Load***
Discrete Input Terminals			
PX-144	5	5	N/A
PX-148	5	2 (plus load)	
PX-149	20	N/A	
PX-172-1	3	6	
PX-172-2	3	6	
Discrete Output Terminals			
PX-244-1	9	N/A	30
PX-244-2	9		30
PX-248	18		60 (plus load)
PX-249	45		35 (plus load)
Analog Input Terminals			
PX-302	60	N/A	N/A
PX-304	85	Load	
PX-308	105	Load	
PX-312	65	N/A	
PX-314	100	N/A	
PX-318	140	N/A	
RTD/Thermocouple Input Terminals			
PX-322-1	60	N/A	N/A
PX-324-1	60		
PX-332-J	65		
PX-334-J	75		
PX-332-K	65		
PX-334-K	75		
Analog Output Terminals			
PX-402	60	N/A	50 (plus load)
PX-404	20		60 (plus load)
PX-408	25		50 (plus load)
PX-412	75		50 (plus load)
PX-414	75		50 (plus load)
PX-418	20		20
Relay Output Terminals			
PX-272-1	10	ON resistance max 100mV (plus load)	N/A
PX-272-2	80		
Combination In/Out Terminals			
PX-549	25 (additional 3mA for inputs)	15 (plus load)	N/A

System Installation and Removal

Bus Coupler and Bus Terminal Installation

Bus Coupler Installation:

1. Attach a Bus Coupler by snapping it onto 35mm DIN rail and securing it into position using the DIN rail locking wheel (where applicable) located on the left side of the coupler.

Bus Terminal Installation:

2. To add a bus terminal, insert unit onto right side of Bus Coupler using the tongue and groove at the top and bottom of the unit, pressing gently until it snaps onto the DIN rail.

- A proper connection cannot be made by sliding the units together on the DIN rail. When correctly installed, no significant gap can be seen between the attached units. Bus connection is made through the six slide contacts located on the upper right side of the units. Add up to 64 bus terminals per Bus Coupler, including a bus end terminal.

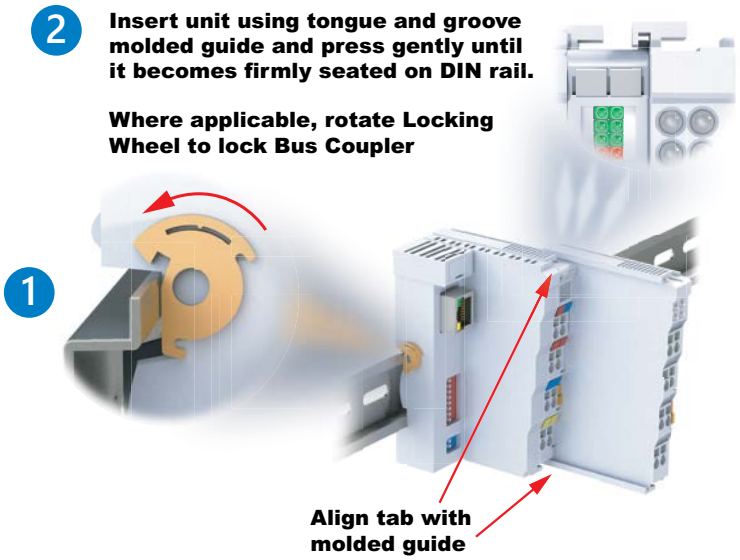

Wiring Connections

- Wire connection is made through a spring clamp style terminal. This terminal is designed for a single-conductor solid or stranded wire. Wire connection is made by firmly pushing the screwdriver into the screwdriver slot, inserting the wire into the wire slot and removing the screwdriver, locking the wire into position.

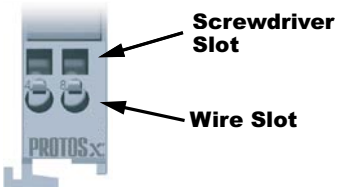

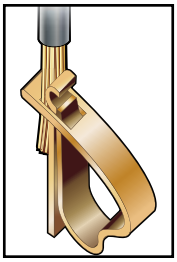

Wiring Specifications	
Connection Type	Spring Clamp Terminals
Wire Gauge	28–14 AWG (0.08–2.5 mm2)
Screwdriver Width	2.5 mm (0.10 in) such as P/N TW-SD-MSL-2
Wire Stripping Length	8mm

** For Thermocouple terminals, thermocouple extension wire is recommended*

Removing Bus Coupler and Bus Terminals

- A locking mechanism prevents individual units from being pulled off. For bus terminal removal, pull the orange DIN rail release tab firmly to unlatch the unit from the rail. If attached to other terminal units, slide unit forward until released. For Bus Couplers with locking wheels, release the DIN rail locking wheel, then pull firmly on DIN rail release tab.

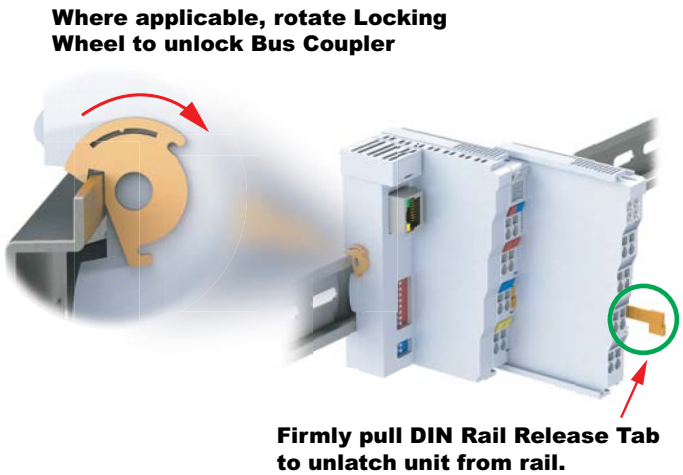

Installation Considerations

Terminal Dimensions and Spacing Requirements

Use the following diagrams to make sure the Protos X system can be installed in your application. Protos X terminals require 35mm DIN rail for mounting; there are no orientation restrictions.

To ensure proper airflow for cooling purposes, units should be spaced, at a minimum, as shown. It is also important to check the Protos X dimensions against the conditions required for your application.

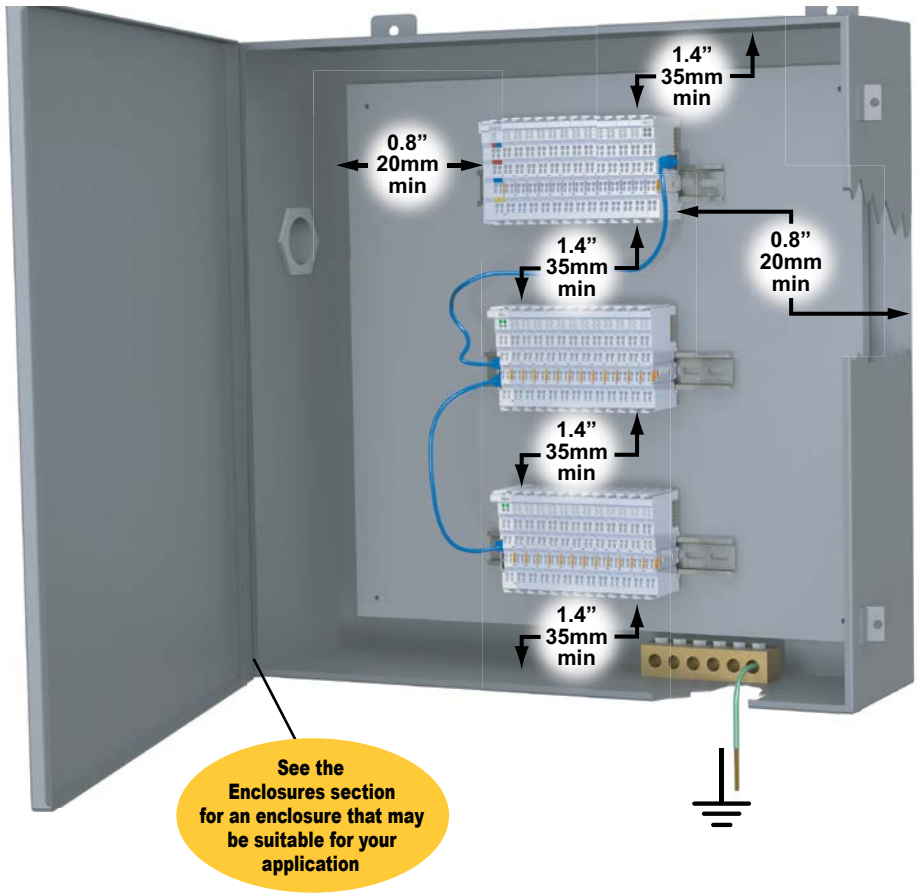

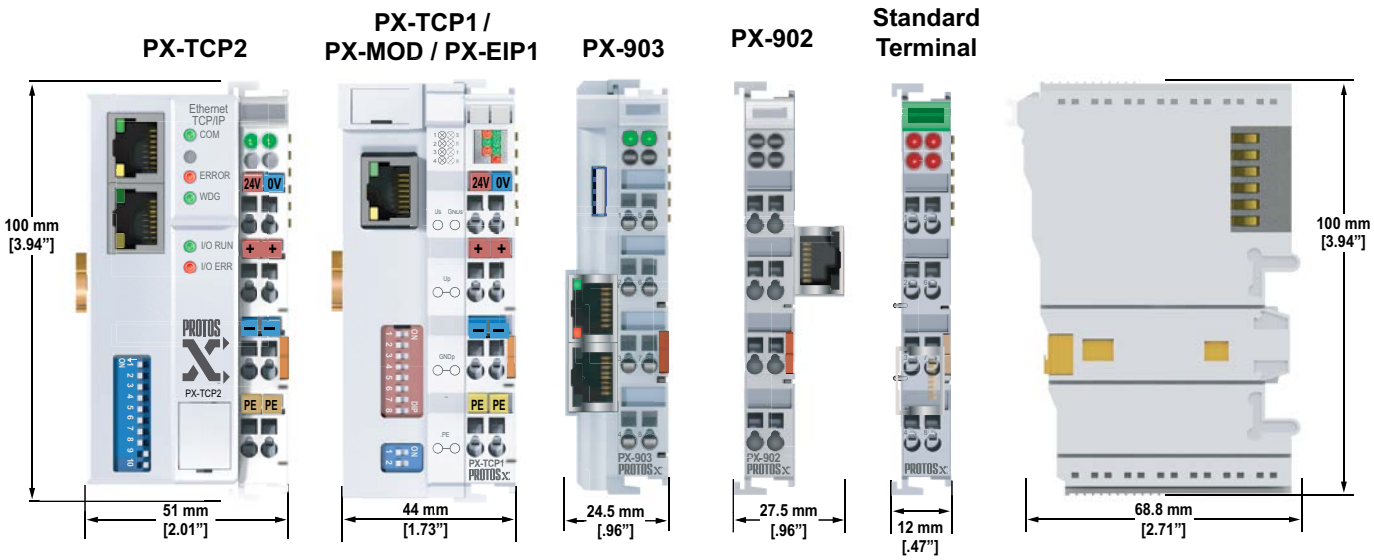

Installation Considerations

Terminal Types

TYPE 1

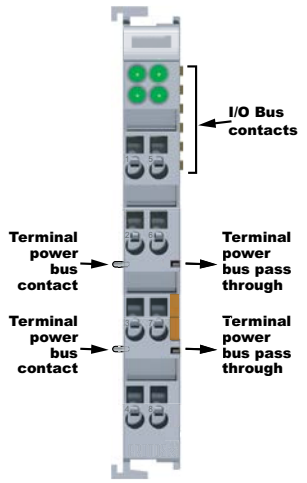

Type 1: This terminal passes the terminal power bus from the preceding terminal to the next terminal and therefore it must be mounted to a preceding terminal that passes bus power.

TYPE 2

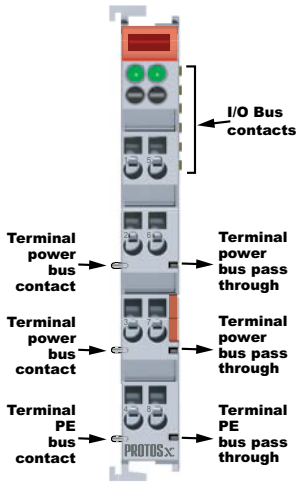

Type 2: This terminal passes the terminal power bus and PE from the preceding terminal to the next terminal and therefore it must be preceded by a terminal that passes both terminal power bus and PE.

TYPE 3

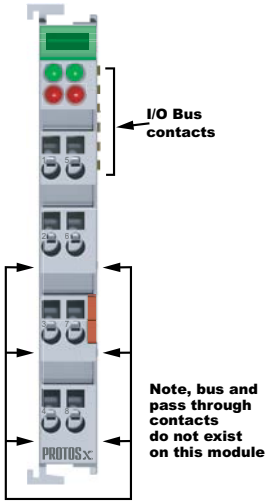

Type 3: This terminal does not pass the terminal power bus or PE and can be preceded by any terminal, however it will interrupt the terminal power bus and PE.

TYPE 4

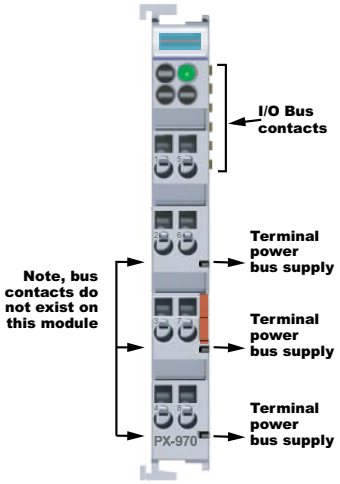

Type 4: This terminal requires external voltage connection and supplies the terminal power bus to terminals located to its right. The terminals to its right must support the same power bus of 120/230 VAC or 24VDC. This terminal will not pass terminal power or PE from any preceding terminals.

TYPE 5

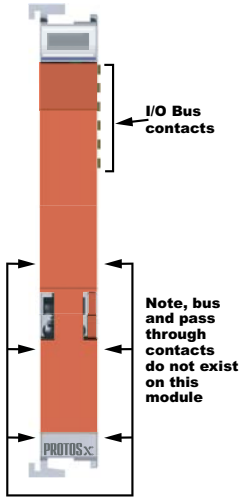

Type 5: This terminal is used to separate the terminal power bus and PE from other terminals and can mounted next to any terminal.