Discrete Input Terminals

PX-149 $149.00

Sixteen-point, 24VDC Discrete Input Terminal

The PX-149 (type 1) DC Input Terminal provides sixteen electrically isolated 24VDC sinking inputs with LED status.

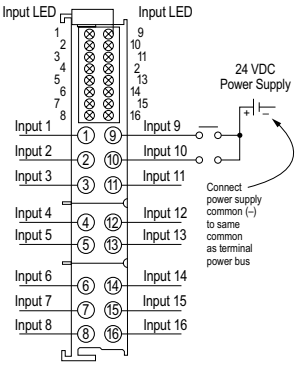

General Specifications	
Operating Temp	32 to 131 °F (0 to 55 °C)
Storage Temp	-13 to 185 °F (-25 to 85 °C)
Relative Humidity	5% to 95%, non-condensing
Environment Air	No corrosive gases permitted
Mounting/ Orientation Restrictions	35mm DIN rail/None
Vibration	Conforms to EN 60068-2-6
Shock	Conforms to EN 60068-2-27/ EN 60068-2-29
Noise Immunity	Conforms to EN 61000-6-2/ EN61000-6-4
Protection Class	IP20
Weight	60g (2.1 oz)
Dimensions (WxHxD)	12 x 100 x 68.8 mm (0.47 x 3.94 x 2.71 in)
Adjacent Mounting on Bus Terminals with Power Contact	Yes, DC only
Adjacent Mounting on Bus Terminals without Power Contact	No
Passes Terminal Bus Power	Yes
Passes PE Bus	No
Agency Approvals*	UL/cUL File No. E157382, CE

Terminal Specifications	
Inputs Per Terminal	16
Input Type	Sinking
Input Data Bytes Used	2 bytes
Input Power Source	Requires external 24VDC power source
Current Consumption (from Terminal Power Bus)	NA
Operating Voltage Rating	24VDC (-15%/+20%)
Peak Voltage Rating	30VDC
ON Voltage Level	11 to 30 VDC
OFF Voltage Level	-3 to +5 VDC
Minimum ON Current	2mA
Maximum OFF Current	40mA
Current Consumption (from I/O Bus)	20mA typical
Electrical Isolation	500Vms (I/O bus/field potential)
Heat Dissipation	1W max
OFF to ON Response	3ms
ON to OFF Response	3ms
Status Indicators	16, indicates input is ON

**To obtain the most current agency approval information, see the Agency Approval Checklist section on the specific part number's web page.*

PX-172-1 $59.00

Two-point, 120–230 VAC Discrete Input Terminal

The PX-172-1 (type 2) DC Input Terminal provides two electrically isolated 120–230 VAC inputs with LED status. For use with 4-wire, 3-wire and 2-wire devices.

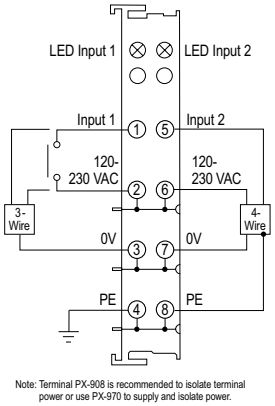

Note: Terminal PX-908 is recommended to isolate terminal power or use PX-970 to supply and isolate power.

General Specifications	
Operating Temp	32 to 131 °F (0 to 55 °C)
Storage Temp	-13 to 185 °F (-25 to 85 °C)
Relative Humidity	5% to 95%, non-condensing
Environment Air	No corrosive gases permitted
Mounting/ Orientation Restrictions	35mm DIN rail/None
Vibration	Conforms to EN 60068-2-6
Shock	Conforms to EN 60068-2-27/ EN 60068-2-29
Noise Immunity	Conforms to EN 61000-6-2/ EN61000-6-4
Protection Class	IP20
Weight	60g (2.1 oz)
Dimensions (WxHxD)	12 x 100 x 68.8 mm (0.47 x 3.94 x 2.71 in)
Adjacent Mounting on Bus Terminals with Power Contact	Yes, AC only
Adjacent Mounting on Bus Terminals without Power Contact	No
Passes Terminal Bus Power	Yes
Passes PE Bus	Yes
Agency Approvals*	UL/cUL File No. E157382, CE

Terminal Specifications	
Inputs Per Terminal	2
Input Type	NA
Input Data Bytes Used	1/4 byte (2 bits)
Input Power Source	Requires external 120–230 VAC power source. PX-908 terminal recommended to provide power to the terminal power bus.
Current Consumption (from Terminal Power Bus)	6mA typical
Operating Voltage Rating	120 to 230 VAC
Peak Voltage Rating	260VAC
ON Voltage Level	79 to 260 VAC
OFF Voltage Level	0 to 40 VAC
Minimum ON Current	250mA
Maximum OFF Current	500mA
Current Consumption (from I/O Bus)	3mA typical
Electrical Isolation	500Vms (I/O bus/field potential)
Heat Dissipation	1W max
OFF to ON Response	10ms
ON to OFF Response	10ms
Status Indicators	2, indicates input is ON

**To obtain the most current agency approval information, see the Agency Approval Checklist section on the specific part number's web page.*

System Installation and Removal

Bus Coupler and Bus Terminal Installation

Bus Coupler Installation:

1. Attach a Bus Coupler by snapping it onto 35mm DIN rail and securing it into position using the DIN rail locking wheel (where applicable) located on the left side of the coupler.

Bus Terminal Installation:

2. To add a bus terminal, insert unit onto right side of Bus Coupler using the tongue and groove at the top and bottom of the unit, pressing gently until it snaps onto the DIN rail.

- A proper connection cannot be made by sliding the units together on the DIN rail. When correctly installed, no significant gap can be seen between the attached units. Bus connection is made through the six slide contacts located on the upper right side of the units. Add up to 64 bus terminals per Bus Coupler, including a bus end terminal.

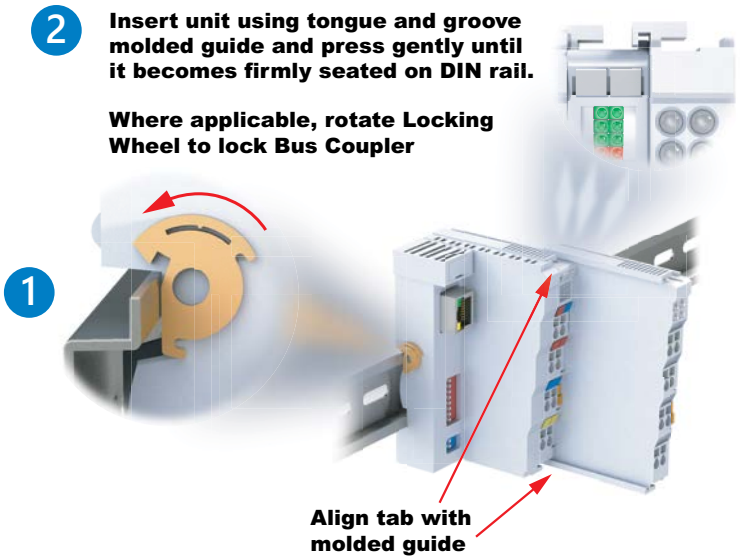

Wiring Connections

- Wire connection is made through a spring clamp style terminal. This terminal is designed for a single-conductor solid or stranded wire. Wire connection is made by firmly pushing the screwdriver into the screwdriver slot, inserting the wire into the wire slot and removing the screwdriver, locking the wire into position.

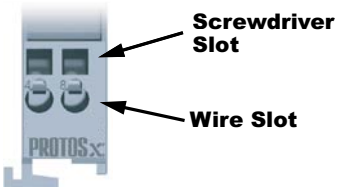

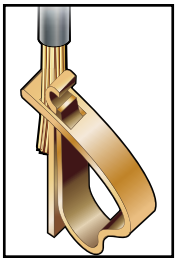

Wiring Specifications	
Connection Type	Spring Clamp Terminals
Wire Gauge	28–14 AWG (0.08–2.5 mm2)
Screwdriver Width	2.5 mm (0.10 in) such as P/N TW-SD-MSL-2
Wire Stripping Length	8mm

** For Thermocouple terminals, thermocouple extension wire is recommended*

Removing Bus Coupler and Bus Terminals

- A locking mechanism prevents individual units from being pulled off. For bus terminal removal, pull the orange DIN rail release tab firmly to unlatch the unit from the rail. If attached to other terminal units, slide unit forward until released. For Bus Couplers with locking wheels, release the DIN rail locking wheel, then pull firmly on DIN rail release tab.

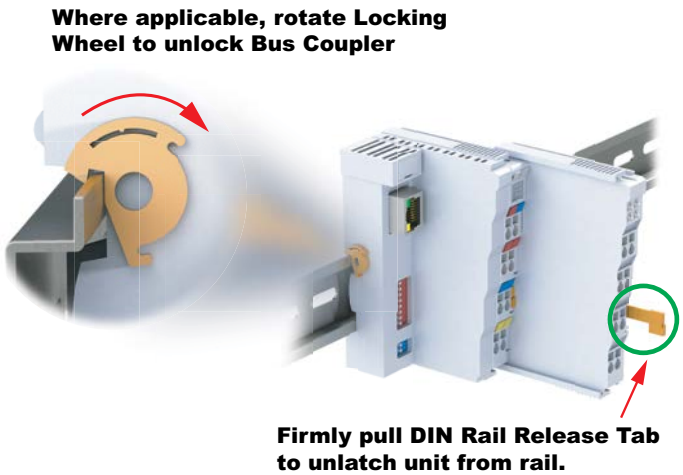

Installation Considerations

Terminal Dimensions and Spacing Requirements

Use the following diagrams to make sure the Protos X system can be installed in your application. Protos X terminals require 35mm DIN rail for mounting; there are no orientation restrictions.

To ensure proper airflow for cooling purposes, units should be spaced, at a minimum, as shown. It is also important to check the Protos X dimensions against the conditions required for your application.

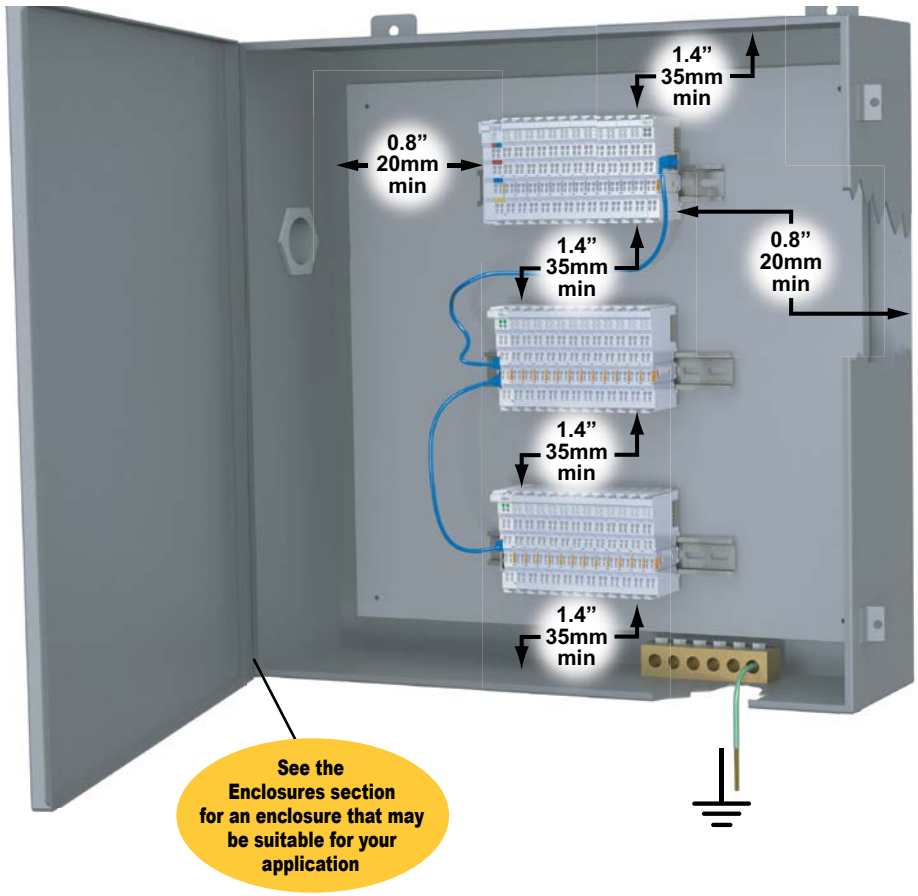

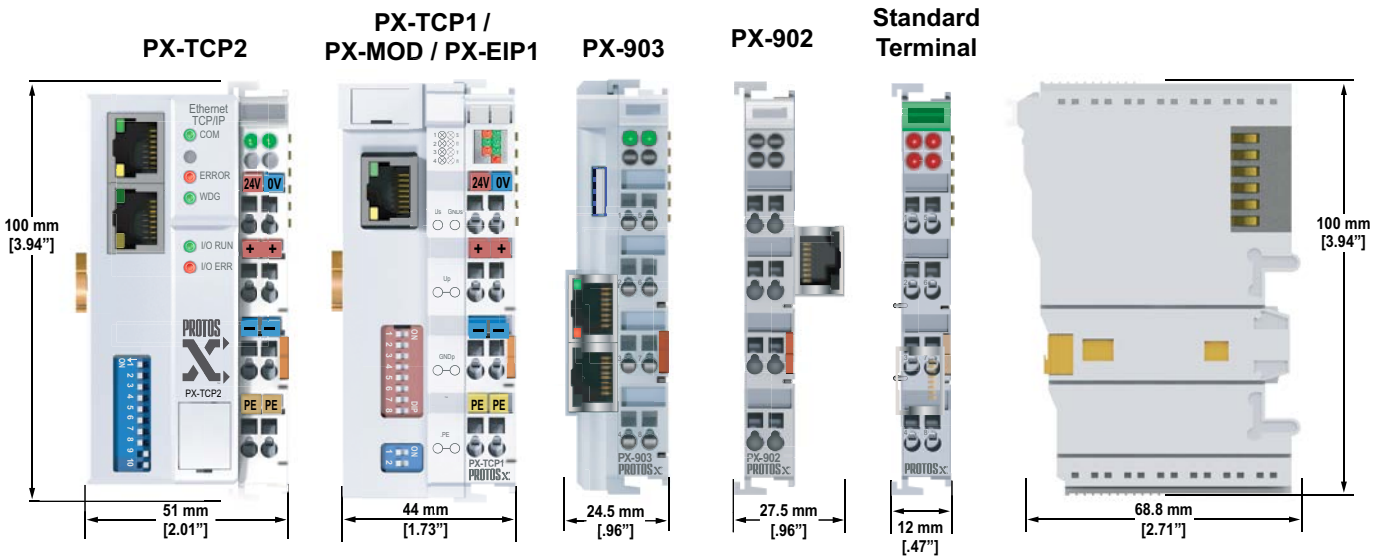

Installation Considerations

Terminal Types

TYPE 1

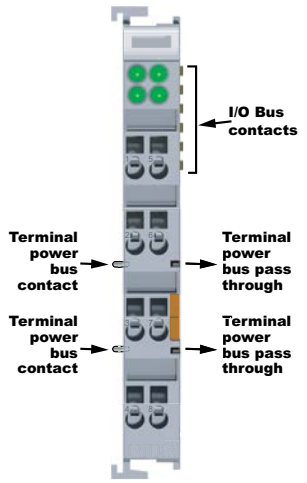

Type 1: This terminal passes the terminal power bus from the preceding terminal to the next terminal and therefore it must be mounted to a preceding terminal that passes bus power.

TYPE 2

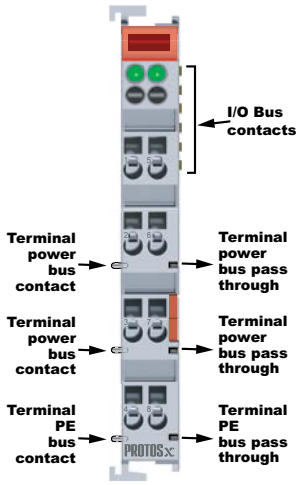

Type 2: This terminal passes the terminal power bus and PE from the preceding terminal to the next terminal and therefore it must be preceded by a terminal that passes both terminal power bus and PE.

TYPE 3

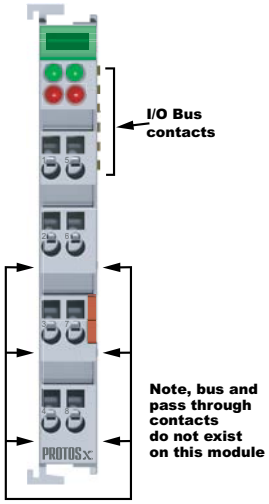

Type 3: This terminal does not pass the terminal power bus or PE and can be preceded by any terminal, however it will interrupt the terminal power bus and PE.

TYPE 4

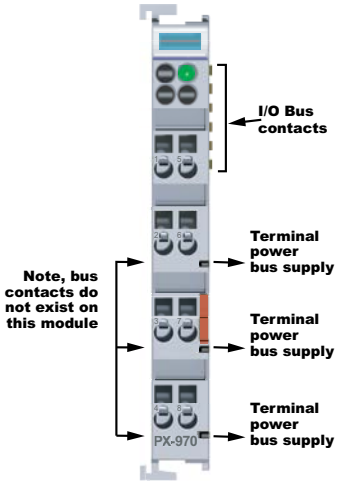

Type 4: This terminal requires external voltage connection and supplies the terminal power bus to terminals located to its right. The terminals to its right must support the same power bus of 120/230 VAC or 24VDC. This terminal will not pass terminal power or PE from any preceding terminals.

TYPE 5

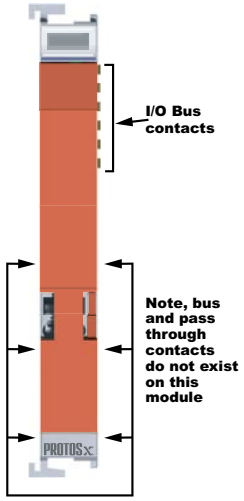

Type 5: This terminal is used to separate the terminal power bus and PE from other terminals and can mounted next to any terminal.