Accessories for 30mm Sensors

Axial Mounting Bracket

Mounting bracket, axial, zinc-plated steel. For use with 30mm sensors. Has two mounting holes (use 5mm screws) and allows the rotation of an optical axis for right-beam-angle-adapter sensors. Hexagonal nuts not included.

Accessories for 30mm Sensors			
Part Number	**Price**	**Description**	**Weight lb [g]**
ST30A	$2.25	Micro Detectors mounting bracket, axial, zinc plated steel. For use with 30mm sensors.	0.18 [81.7]

ST30A

Dimensions

mm [inches]

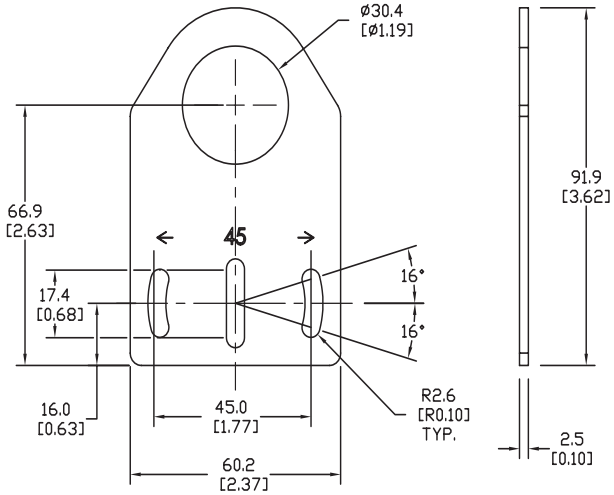

Right-angle Mounting Bracket

Mounting bracket, right-angle, zinc-plated steel. For use with 30mm sensors. Has two mounting holes (use 5mm screws) and allows the rotation of an optical axis for axial sensors. Hexagonal nuts not included.

Accessories for 30mm Sensors			
Part Number	**Price**	**Description**	**Weight lb [g]**
ST30C	$2.25	Micro Detectors mounting bracket, right-angle, zinc plated steel. For use with 30mm sensors.	0.18 [81.7]

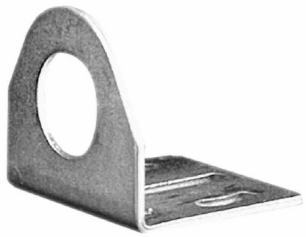

ST30C

Dimensions

mm [inches]

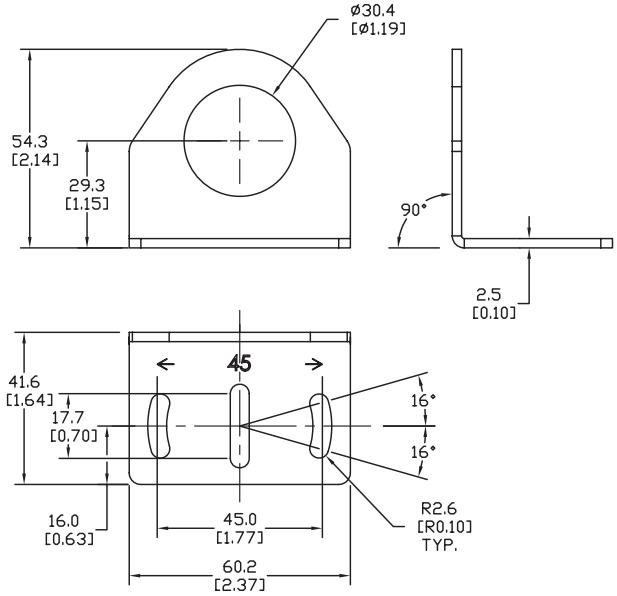

Accessories for 30mm Sensors

Right-angle Mounting Bracket

Mounting bracket, right-angle, 304 stainless steel. For use with 30mm sensors.

Accessories for FW Series Sensors			
Part Number	**Price**	**Description**	**Weight lb [g]**
ST30C6W	$4.00	AutomationDirect mounting bracket, right-angle, 304 stainless steel. For use with 30mm sensors.	0.15 (68.0)

ST30C6W

Dimensions

mm [inches]

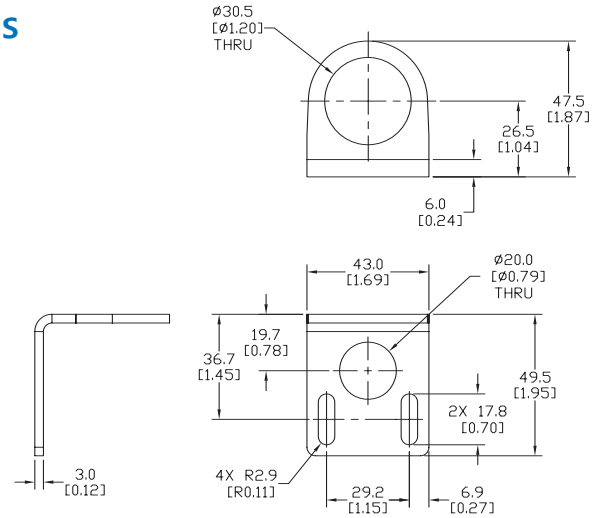

Right-angle Swivel Mounting Systems

Mounting bracket, right-angle swivel, 360 degree vertical and horizontal adjustment, 12mm rod mount. For use with 30mm sensors. Available in all 304 stainless steel or with an aluminum head with a 304 stainless steel mounting plate.

Accessories for 30mm Sensors						
Part Number	**Price**	**Description**	**Mounting Head**	**Mounting Plate**	**Drawing Link**	**Weight lb [g]**
OPT2118	$11.50	Wenglor mounting bracket, right-angle swivel, 360 degree vertical and horizontal adjustment, aluminum, 12mm rod mount. For use with 30mm sensors.	Aluminum	304 Stainless steel	PDF	0.18 [81.7]
OPT2119	$21.00	Wenglor mounting bracket, right-angle swivel, 360 degree vertical and horizontal adjustment, 304 stainless steel, 12mm rod mount. For use with 30mm sensors.	304 Stainless Steel	304 Stainless steel	PDF	0.18 [81.7]

Note: 304 Stainless steel mounting rods sold separately: OPT2109 (200mm [7.87 in] length), OPT2110 (300mm [11.81 in] length), and OPT2111 (500mm [19.69 in] length).

OPT2118, OPT2119

Mounting Rods and Brackets

Mounting Rods

304 Stainless steel rods for mounting swivel brackets OPT2112 - OPT2127
Available in three lengths: 200mm, 300mm, and 500mm. 12mm diameter.

Mounting Rods for OPT2112-2127 Swivel Mounting Brackets				
Part Number	***Price***	***Description***	***Drawing Link***	***Weight lb (g)***
OPT2109	$13.00	Wenglor mounting rod, 12mm diameter, 200mm length, 304 stainless steel.	PDF	0.41 [185.97]
OPT2110	$16.00	Wenglor mounting rod, 12mm diameter, 300mm length, 304 stainless steel.	PDF	0.60 [272.16]
OPT2111	$21.00	Wenglor mounting rod, 12mm diameter, 500mm length, 304 stainless steel.	PDF	0.98 [444.52]

Right-angle Mounting Bracket

Mounting bracket, right-angle, nickel-plated brass. For use with 12mm mounting rods OPT2109, OPT2110 & OPT2111.

Right-angle Mounting Brackets for 12mm Sensors				
Part Number	***Price***	***Description***	***Drawing Link***	***Weight lb [g]***
OPT2108	$16.00	Wenglor mounting bracket, right-angle, nickel plated brass. For use with 12mm mounting rods OPT2109, OPT2110 & OPT2111.	PDF	0.07 [31.8]