Sure step® Stepping System Drives

*Sure*Step® Microstepping Drives

*Sure*Step Series Specifications – Microstepping Drives				
Microstepping Drive		***STP-DRV-4035***	***STP-DRV-4850***	***STP-DRV-80100***
Price		<--->	<--->	<--->
Drive Type		Microstepping drive with pulse input	Advanced microstepping drive with pulse or analog input, serial communication (serial communication allows indexing capability)	
Output Current		selectable from 0.4 to 3.5 A/phase (maximum output power is 140 W)	0.1-5.0 A/phase (in 0.01A increments)	0.1-10.0 A/phase (in 0.01A increments)
Input Voltage (external p/s required)		12-42 VDC (including ripple voltage)	24-48 VDC (nominal) (range: 18-53 VDC)	24-80 VDC (nominal) (range: 18-88 VDC)
Configuration Method		dip switches	*Sure*Step Pro software (included)	
Amplifier Type		MOSFET, dual H-bridge, bipolar chopper	MOSFET, dual H-bridge, 4-quadrant	
Current Control		3-state PWM 20 kHz	4-state PWM @ 20 kHz	
Protection		n/a	over-voltage, under-voltage, over-temperature, external output faults (phase-to-phase & phase-to-ground), inter-amplifier shorts	
Recommended Input Fusing		Fuse: 4A fast acting; ADC # ACG4 Fuse Holder: ADC # DN-F6L110	Fuse: 4A 3AG delay (ADC #MDL4) Fuse Holder: ADC #DN-F6L110	Fuse: 6.25A 3AG delay (ADC #MDL6-25) Fuse Holder: ADC #DN-F6L110
Input Signals	***Input Circuit***	Opto-coupler input with 440Ω resistance (5 to 15 mA input current); Logic Low is input 0.8 VDC or less; Logic High is input 4 VDC or higher.	Opto-coupler input with 5 to 15 mA input current; Logic Low is input 0.8 VDC or less; Logic High is input 4 VDC or higher.	
	Step/Pulse	Motor steps on falling edge of pulse and minimum pulse width is 0.5 microseconds (1MHz)	optically isolated, differential, 5V, 330Ω; min pulse width = 250 ns max pulse frequency = 2MHz adjustable bandwidth digital noise rejection feature FUNCTIONS: step & direction, CW/CCW step, A/B quadrature, run/stop & direction, jog CW/CCW, CW/CCW limits	
	Direction	Needs to change at least 2 microseconds before a step pulse is sent		
	Enable	Logic 1 will disable current to the motor (current is enabled with no hook-up or logic 0)	optically isolated, 5-12V, 680Ω; FUNCTIONS: motor enable, alarm reset, speed select (oscillator mode)	
	Analog	n/a	Range: 0–5 VDC; Resolution: 12 bit; FUNCTION: speed control	
Output Signal		n/a	optically isolated, 24V, 10mA max; FUNCTIONS: fault, motion, tach	
Communication Interface		n/a	RS-232; RJ11 (6P4C) receptacle	
Non-volatile Memory Storage		n/a	Configurations are saved in FLASH memory on-board the DSP.	
Features	***Idle Current Reduction***	0% or 50% reduction (idle current setting is active if motor is at rest for 1 second or more)	reduction range of 0-90% of running current after delay selectable in ms	
	Microstep Resolution	400 (200x2), 1,000 (200x5), 2,000 (200x10), or 10,000 (200x50) steps/rev	software selectable from 200 to 51200 steps/rev in increments of 2 steps/rev	
	Modes of Operation	step & direction	step & direction, CW/CCW, A/B quadrature, oscillator, joystick, serial commands	
	Phase Current Setting	0.4 to 3.5 A/phase with 32 selectable levels	0.1-5.0 A/phase (in 0.01A increments)	0.1-10.0 A/phase (in 0.01A increments)
	Self Test	uses half-step to rotate 1/2 revolution in each direction at 100 steps/second	checks internal & external power supply voltages, diagnoses open motor phases	
	Additional Features	n/a	Anti-resonance (Electronic Damping) Auto setup Microstep emulation Torque ripple smoothing (allows for fine adjustment of phase in the range 0.25 to 1.5 rps) Waveform (command signal) smoothing	
Connectors		Screw terminal blocks with AWG 18 maximum wire size	Communication: RJ11 (6P4C); Other: removable screw terminal blocks	
Maximum Humidity		90% non-condensing		
Storage Temperature		-20 to 80 °C [-4 to 176 °F]		
Operating Temperature		0 to 55 °C [32 to 131 °F] recommended; 70 °C [158 °F] maximum	0–55 °C [32–151 °F]; (mount to suitable heat sink)	
Drive Cooling Method		natural convection (mount drive to metal surface to dissipate heat)	natural convection (mount to suitable heat sink)	
Mounting		(4) #4 screws to mount on wide side; (2) #4 screws to mount on narrow side	#6 mounting screws (mount to suitable heat sink)	
Dimensions		3.0 x 4.0 x 1.5 inches [76.2 x 101.6 x 38.1 mm]	3.0 x 3.65 x 1.125 inches [76.2 x 92.7 x 28.6 mm]	
Weight		9.3 oz. [264 g]	8 oz [227g] (approximate)	
Agency Approvals		CE (complies with EN55011A & EN50082-1 (1992)), RoHS	CE, RoHS	

SureStep® Stepping System Software

*Sure*Step® Microstepping Drives

SureStep® Drives Modes of Operation					
Drive Part #	**Step & Direction (1)**	**CW/CCW (1)**	**A/B Quadrature (1)**	**Oscillator (Analog Input) (2)**	**Serial Command (Indexing) (3)**
STP-DRV-4035	Y	–	–	–	–
STP-DRV-4850	Y	Y	Y	Y	Y
STP-DRV-80100	Y	Y	Y	Y	Y

1) Pulse Inputs: Refer to the charts at the end of the SureStep section for PLC compatibility.

2) Analog Inputs: Use any 0–5V analog output card. Advanced drives (-4850 & -80100) also have a built-in +5VDC for use with potentiometers.

3) Serial Commands: use any controller that has ASCII capability.

*Sure*Step Pro Drive Configuration Software

*Sure*Step Pro configuration software is available as a free download from our website for *Sure*Step advanced drives (STP-DRV-4850 & -80100).

- Used for easy configuration and setup of the drive, including drive, motion control mode, I/O, motor.
- Serial command language for motor drive control via serial port; eliminates the need for separate motion controllers or indexers; provides easy interface to other industrial devices such as PCs, PLCs and HMIs.
- Easily use the ASCII output commands from most of our PLCs to enable indexing capability.
- Help files include technical data, application information, advanced setup, serial command instructions.
- Runs on Windows 98, 2000, ME, NT, Vista, XP.

Microstepping Drive Dimensions

STP-DRV-4035

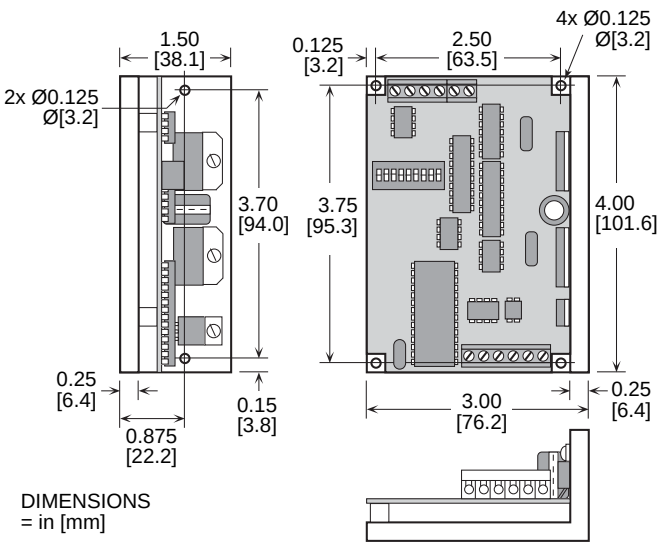

DIMENSIONS
= in [mm]

STP-DRV-4850 & -80100

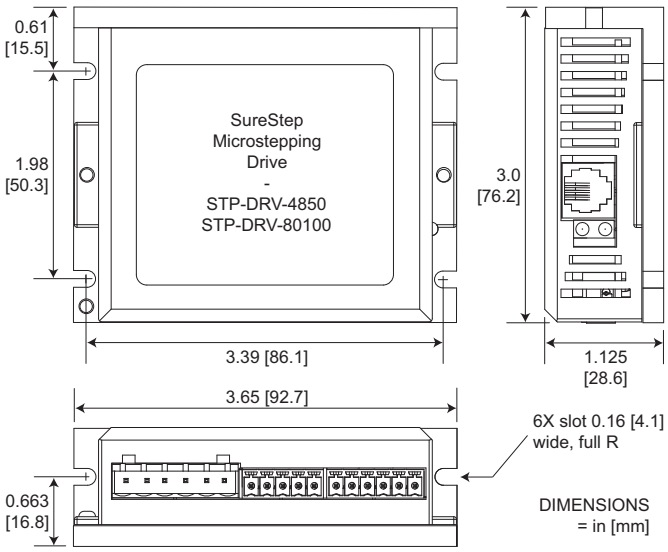

DIMENSIONS
= in [mm]

SureStep® Stepping Systems

*Sure*Step® System Overview

***SureStep* Step Motor Power Supply**

+

***Sure*Step Microstepping Drive**

+

***SureStep* Extension Cable**

+

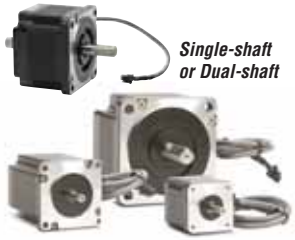

***SureStep* Connectorized Step Motor**

The *Sure*Step® stepping system series includes:

- Four step motor power supplies
- One DIP-switch configurable microstepping drive
- Two software configurable advanced microstepping drives
- Two motor extension cables
- Twenty step motors (NEMA 17, 23, 34 frame sizes; single shaft & dual shaft)

***Sure*Step Power Supply / Drive Compatibility**			
Drive(1)(2)	**Recommended Power Supply(1)(2)**		
Model #	**STP-PWR-3024**	**STP-PWR-4805** **STP-PWR-4810**	**STP-PWR-7005**
STP-DRV-4035 (40 VDC max input)	√	√	No
STP-DRV-4850 (48 VDC max input)	√	√	No
STP-DRV-80100 (80 VDC max input)	√	√	√

1) Do NOT use a power supply that exceeds the drive's input voltage range. If using a non-STP linear power supply, ensure that the unloaded voltage does not float above the drive's maximum input range.

2) For best performance, use the lowest voltage power supply that supplies the required speed and torque.

***Sure*Step Drive / Motor Compatibility**					
Motor(1)(2)			**Recommended Drive(1)**		
Model # (1)(2)	**Rated Amps**	**Extension Cable(2)**	**STP-DRV -4035(1) (3.5A max output)**	**STP-DRV -4850(1) (5.0A max output)**	**STP-DRV -80100(1) (10.0A max output)**
STP-MTR-17040(D)	1.7	STP-EXT-020	√	√	–
STP-MTR-17048(D)	2.0		√	√	
STP-MTR-17060(D)	2.0		√	√	
STP-MTR-23055(D)	2.8		√	√	
STP-MTR-23079(D)	2.8		√	√	
STP-MTR-34066(D)	2.8		√	√	
STP-MTRH-23079(D)	5.6	STP-EXTH-020	–		√
STP-MTRH-34066(D)	6.3				√
STP-MTRH-34097(D)	6.3				√
STP-MTRH-34127(D)	6.3				√

1) The combinations above will perform according to the published speed/torque curves. However, any STP motor can be used with any STP drive. Using a motor with a current rating higher than the drive's output rating will proportionally limit the motor torque.

2) MTR motors have connectors compatible with the EXT extension cables. MTRH motors have connectors compatible with the EXTH extension cables.

Standard stepper drive features

- Max 3.5A, 40V
- DIP switch configurable
- Selectable microstepping: x2, x5, x10, x50 steps/revolution
- Self test feature
- Idle current reduction

Advanced stepper drive features

- Max 5A, 48V and max 10A, 80V models available
- Software configurable
- Programmable microsteps
- Internal indexer (via ASCII commands)
- Self test feature
- Idle current reduction
- Anti-resonance
- Torque ripple smoothing
- Step, analog, & serial communication inputs
- Serial communications allow point-to-point positioning

Motor features

- High torque, 2-phase, bipolar, 1.8° per step, 4-lead
- Available in single-shaft and dual-shaft models
- (6) NEMA 17 motors
- (6) NEMA 23 motors
- (8) NEMA 34 motors

Power supply features

- Linear, unregulated DC power supplies
- 120/240 VAC selectable input
- 32V, 48V, 70V DC output models available
- All models have additional 5VDC, 500 mA regulated logic supply
- Fusing included for both incoming AC and outgoing DC
- 5V supply has electronic overload protection

Typical Wiring Diagram

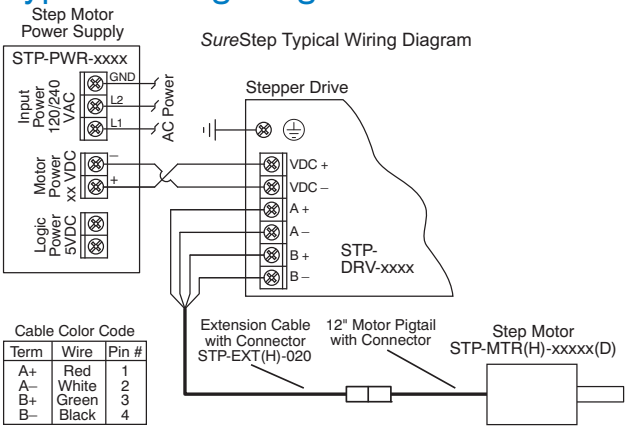

Cable Color Code

Term	Wire	Pin #
A+	Red	1
A–	White	2
B+	Green	3
B–	Black	4

Wiring Solutions

Wiring Solutions using the *ZIP*Link Wiring System

*ZIP*Links eliminate the normally tedious process of wiring between devices by utilizing prewired cables and DIN rail mount connector modules. It's as simple as plugging in a cable connector at either end or terminating wires at only one end. Prewired cables keep installation clean and efficient, using half the space at a fraction of the cost of standard terminal blocks. There are several wiring solutions available when using the *ZIP*Link System ranging from PLC I/O-to-*ZIP*Link Connector Modules that are ready for field termination, options for connecting to third party devices, GS, DuraPulse and SureServo Drives, and specialty relay, transorb and communications modules. Pre-printed I/O-specific adhesive label strips for quick marking of *ZIP*Link modules are provided with *ZIP*Link cables. See the following solutions to help determine the best *ZIP*Link system for your application.

Solution 1: DirectLOGIC, CLICK and Productivity3000 I/O Modules to *ZIP*Link Connector Modules

When looking for quick and easy I/O-to-field termination, a *ZIP*Link connector module used in conjunction with a prewired *ZIP*Link cable, consisting of an I/O terminal block at one end and a multi-pin connector at the other end, is the best solution.

Using the PLC I/O Modules to *ZIP*Link Connector Modules selector tables located in this section,

1. Locate your I/O module/PLC.
2. Select a *ZIP*Link Module.
3. Select a corresponding *ZIP*Link Cable.

Solution 2: *Direct*LOGIC, CLICK and Productivity3000 I/O Modules to 3rd Party Devices

When wanting to connect I/O to another device within close proximity of the I/O modules, no extra terminal blocks are necessary when using the *ZIP*Link Pigtail Cables. *ZIP*Link Pigtail Cables are prewired to an I/O terminal block with color-coded pigtail with soldered-tip wires on the other end.

Using the I/O Modules to 3rd Party Devices selector tables located in this section,

1. Locate your PLC I/O module.
2. Select a *ZIP*Link Pigtail Cable that is compatible with your 3rd party device.

Solution 3: GS Series and DuraPulse Drives Communication Cables

Need to communicate via Modbus RTU to a drive or a network of drives?

*ZIP*Link cables are available in a wide range of configurations for connecting to PLCs and *Sure*Servo, *Sure*Step, Stellar Soft Starter and AC drives. Add a *ZIP*Link communications module to quickly and easily set up a multi-device network.

Using the Drives Communication selector tables located in this section,

1. Locate your Drive and type of communications.
2. Select a *ZIP*Link cable and other associated hardware.

Wiring Solutions

Solution 4: Serial Communications Cables

*ZIP*Link offers communications cables for use with *Direct*LOGIC, CLICK, and Productivity3000 CPUs, that can also be used with other communications devices. Connections include a 6-pin RJ12 or 9-pin, 15-pin and 25-pin D-sub connectors which can be used in conjunction with the RJ12 or D-Sub Feedthrough modules.

Using the Serial Communications Cables selector table located in this section,

1. Locate your connector type
2. Select a cable.

Solution 5: Specialty *ZIP*Link Modules

For additional application solutions, *ZIP*Link modules are available in a variety of configurations including stand-alone relays, 24VDC and 120VAC transorb modules, D-sub and RJ12 feedthrough modules, communication port adapter and distribution modules, and *Sure*Servo 50-pin I/O interface connection.

Using the *ZIP*Link Specialty Modules selector table located in this section,

1. Locate the type of application.
2. Select a ZIPLink module.

Solution 6: *ZIP*Link Connector Modules to 3rd Party Devices

If you need a way to connect your device to terminal blocks without all that wiring time, then our pigtail cables with color-coded soldered-tip wires are a good solution. Used in conjunction with any compatible *ZIP*Link Connector Modules, a pigtail cable keeps wiring clean and easy and reduces troubleshooting time.

Using the Universal Connector Modules and Pigtail Cables table located in this section,

1. Select module type.
2. Select the number of pins.
3. Select cable.

Motor Controller Communication

Drive / Motor Controller (GS/DuraPulse/SureServo/SureStep/Stellar) ZIPLink Selector							
Drive / Motor Controller		Communications			ZIPLink Cable		
Controller	Comm Port Type	Network/Protocol	Connects to	Comm Port Type	Cable (2 meter length)	Cable Connectors	Other Hardware Required
GS1	RJ12	RS-485 Modbus RTU	DL06 PLCs	Port 2 (HD15)	GS-485HD15-CBL-2	RJ12 to HD15	–
			D2-260 CPU				–
			GS-EDRV100	RJ12	GS-EDRV-CBL-2	RJ12 to RJ12	–
			ZL-CDM-RJ12Xxx*	RJ12	GS-485RJ12-CBL-2		–
			FA-ISOCON	5-pin Connector	GS-ISOCON-CBL-2	RJ12 to 5-pin plug	–
GS2	RJ12	RS-232 Modbus RTU	CLICK PLCs	Port 2 (RJ12)	GS-RJ12-CBL-2	RJ12 to RJ12	–
			DL05 PLCs				–
			DL06 PLCs	Port 2 (HD15)			FA-15HD
			D2-250-1 CPU				
			D2-260 CPU				
			D4-450 CPU	Port 3 (25-pin)			FA-CABKIT
			P3-550 CPU	Port 2 (RJ12)			–
		RS-485 Modbus RTU	DL06 PLCs	Port 2 (HD15)	GS-485HD15-CBL-2	RJ12 to HD15	–
			D2-260 CPU				–
			GS-EDRV100	RJ12	GS-EDRV-CBL-2	RJ12 to RJ12	–
			ZL-CDM-RJ12Xxx*	RJ12	GS-485RJ12-CBL-2		–
			FA-ISOCON	5-pin Connector	GS-ISOCON-CBL-2	RJ12 to 5-pin plug	–
DuraPulse (GS3)	RJ12	RS-485 Modbus RTU	DL06 PLCs	Port 2 (HD15)	GS-485HD15-CBL-2	RJ12 to HD15	–
			D2-260 CPU				–
			GS-EDRV100	RJ12	GS-EDRV-CBL-2	RJ12 to RJ12	–
			ZL-CDM-RJ12Xxx*	RJ12	GS-485RJ12-CBL-2		–
			FA-ISOCON	5-pin Connector	GS-ISOCON-CBL-2	RJ12 to 5-pin plug	–
Stellar (Soft Starter) SR44 Series	RJ45**	RS-485 Modbus RTU	DL06 PLCs	Port 2 (HD15)	SR44-485HD15-CBL-2	RJ45 to HD15	SR44-RS485**
			D2-250-1 CPU				
			D2-260 CPU				
			ZL-CDM-RJ12Xxx*	RJ12	SR44-485RJ45-CBL-2	RJ45 to RJ12	
SureServo	IEEE1394 (CN3)	RS-232 Modbus RTU	CLICK PLCs	Port 2 (RJ12)	SVC-232RJ12-CBL-2	6-pin IEEE to RJ12	–
			DL05 PLCs				–
			DL06 PLCs	Port 2 (HD15)			FA-15HD
			D2-250-1 CPU				
			D2-260 CPU				
			D4-450 CPU	Port 3 (25-pin)			FA-CABKIT
			P3-550 CPU	Port 2 (RJ12)			–
		RS-485 Modbus RTU	DL06 PLCs	Port 2 (HD15)	SVC-485HD15-CBL-2	6-pin IEEE to HD15	–
			D2-260 CPU				–
			ZL-CDM-RJ12Xxx*	RJ12	SVC-485RJ12-CBL-2	6-pin IEEE to RJ12	–
			USB-485M	RJ45	SVC-485CFG-CBL-2	6-pin IEEE to RJ45	–
SureStep	RJ12	RS-232 ASCII	DL06 PLCs	Port 2 (HD15)	STP-232HD15-CBL-2	HD15-pin to RJ12	–
			D2-250-1 CPU				–
			D2-260 CPU (Port2)				–
			DL05 PLCs	RJ12	STP-232RJ12-CBL-2	RJ12 to RJ12	–
			CLICK PLCs				–

** When using the ZL-CDM-RJ12Xxx ZIPLink Communication Distribution Module, replace the lowercase xx with the number of RJ12 ports, i.e.4 for four ports or10 for ten ports. (ex: ZL-CDM-RJ12X4 or ZL-CDM-RJ12X10)*

*** The SR44-RS485 Communications Adapter must be installed for RS-485 communications with the Stellar soft starters.*