PATLITE®

Audible Signal Overview

Audible Signal Devices

Patlite offers a wide range of audible signal devices for either installation panel or surface mount applications with a variety of decibel ranges and options. All options come with pre-configured digital audio tones and the ability to be field configured using an SD card.

- Up to 110db (signal horn)
- Temperature tolerant (typically -10°C or less to +50°C or more)
- Good environmental protection ratings when installed correctly
- Wide range of digital tones to choose from
- Optional SD card can be used to field configure tones
- Variety of models for both AC and DC applications
- Polycarbonate or plastic construction

Audible Accessories

Accessories for Patlite audible signal devices:

- Replacement parts
- 2GB SD card

PATLITE® Audible Alarm Buzzers

Panel-mount Electronic Buzzers

BM Series Buzzer Features

- Available in both AC and DC versions
- 30mm round mounting on 50mm square backing
- Two selectable alarm sounds
- Up to 90dB volume
- Meets IP30 standards
- Designed to operate in temperatures from -10 to 60°C [14 to 140°F]

BM-202H

BM Series Buzzer Specifications

Part Number	***BM-202H***	***BM-212H***
Price		
Drawing Link	PDF	PDF
Description	Buzzer	
Rated Voltage	24V AC/DC	120 VAC
Operating Voltage Range	Rated voltage ± 10%	
Rated Power Consumption	0.4 W	2.5 W
Maximum Volume	85dB @ 1m	90dB @ 1m
Tone Type	Buzzer 1: Slow intermittent Buzzer 2: Fast intermittent	
Operating Temperature	-10 to 60°C [14 to 140°F]	
Operating Ambient Humidity	Less than 85% (no condensation)	
Mounting Location	Indoors	
Mounting Direction	Upright, sideways, upside-down	
Protection	IP30 (IEC 60529)	
Insulation Resistance	More than 1MΩ at 500VDC between terminals and chassis	
Withstand Voltage	500 VAC applied for 1 minute between terminals and chassis	1500 VAC applied for 1 minute between terminals and chassis
Weight	100g [3.5 oz]	
Housing Material	ABS Plastic	
Agency Approvals	EMC Directive (EN 55011, EN 610006-2) RoHS Directive (EN 50581) Conforms to CE requirements	-

To obtain the most current agency approval information, see the Agency Approval Checklist section on the specific part number's web page.

Wiring Diagram

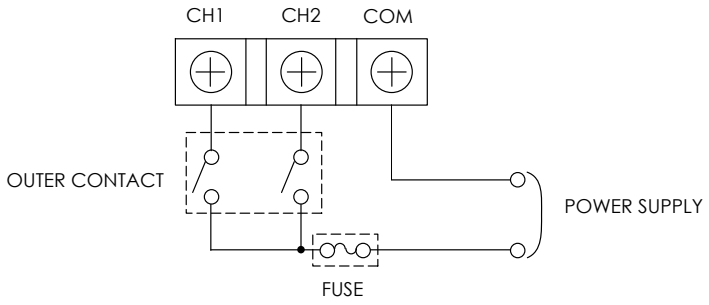

PATLITE® Audible Signal Horns

Electronic Sound Signal Horns

EHS Series Horns Features

- Compact signal horn
- Four playback modes
- Can be used with either PNP or NPN inputs
- Meets IP65 standards
- Designed to operate in temperatures from -20 to 50°C [-4 to 122°F]
- Polycarbonate construction
- 32 standard sounds
- Optional SD card for field configuration (sold separately)

EHS-M1TE

V21100522-F1

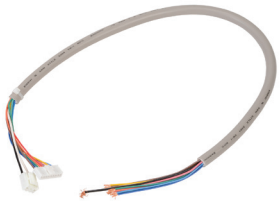

V13100076-F1

EHS Series Signal Horns Specifications

Part Number	EHS-M1TE	EHS-M2TE
Price		
Drawing Link	PDF	PDF
Description	Signal Horn	
Rated Voltage	12-24VDC	100-240 VAC (50/60Hz)
Operating Voltage	10.8-35 VDC	90-264 VAC (50/60Hz)
Current Consumption	450mA	140mA
Power Consumption	5.0-7.6 W	6.9-7.3 W
Inrush Current	4-12.5 A or less	6-23 A or less
Maximum Volume	110dB @ 1m	
Tone Type	Electronic (32 tones available)	
Operating Temperature	-20 to 50°C [-4 to 122°F]	
Operating Ambient Humidity	Less than 85% (no condensation)	
Mounting Location	Indoors/outdoors	
Mounting Direction	Upright, sideways, upside-down	
Protection	IP65	
Insulation Resistance	More than 1MΩ at 500VDC between terminals and chassis	
Withstand Voltage	500 VAC applied for 1 minute between terminals and chassis	1500 VAC applied for 1 minute between terminals and chassis
Vibration Resistance	45.0 m/s2 (IEC 60068-2-6:2007), upright	
Weight	1.25 kg [2.8 lbs]	
Housing Material	Polycarbonate	
Memory Card	SD card SDV-2GP recommended, sold separately), FAT16 or 32 format	
Agency Approvals	EMC Directive (EN 61000-6-4, EN 6100-6-2)	-
	RoHS Directive (EN 50581) UL 464, CSA-C22.2 No. 205-M1983 FCC Part 15 Subpart B Class A KC (KN22, KN24) UL Listed (File S24210)	

To obtain the most current agency approval information, see the Agency Approval Checklist section on the specific part number's web page.

EHS Series Accessories

Part Number	Price	Description
V21100522-F1		Replacement cover, for EHS series signal horns
V13100076-F1		Replacement 16 inch cable, for EHS series signal horns
SDV-2GP		2GB SD card

Wiring Diagrams

Non-voltage Contact

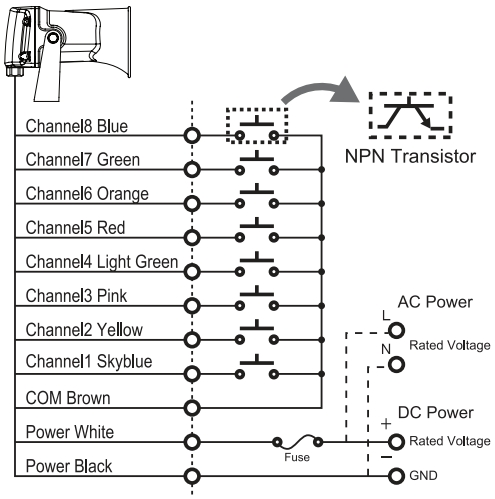

Voltage Contact - EHS-M1TE only

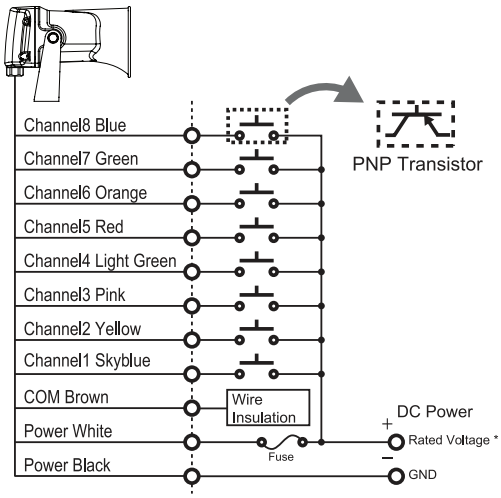

*Voltage contact input range - 10.8 to 31.6 VDC

PATLITE® Audible Electronic Alarms

BD Series Panel- or Surface-mount Electronic Alarms

Features

- 80mm square alarm
- 32 different alarm tones available
- Up to 90dB volume
- Meets IP54 standards
- Designed to operate in temperatures from -20 to 55°C [-4 to 131°F]
- ABS plastic construction
- 32 standard sounds
- Optional SD card for field configuration (sold separately)

BD-24AE-J

BD Series Accessories

Part Number	Price	Description
SDV-2GP		2GB SD card

BD Series Alarm Specifications

Part Number		BD-24AE-J	BD-24AE-K
Price			
Drawing Link		PDF	PDF
Description		Alarm	
Rated Voltage		12-24VDC	
Operating Voltage Range		10.8-26.4 VDC	
Rated Power Consumption	Standby	0.5 W	
	Maximum	4.0 W	
Maximum Volume		90dB @ 1m	
Tone Type		Electronic (32 tones available)	
Operating Temperature		-20 to 55°C [-4 to 131°F]	
Operating Ambient Humidity		Less than 85% (no condensation)	
Mounting Location		Indoors	
Mounting Direction		Upright, sideways, inverted	
Protection		IP54	
Insulation Resistance		More than 1MΩ at 500VDC between terminals and chassis	
Withstand Voltage		500 VAC applied for 1 minute between terminals and chassis	
Vibration Resistance		19.6 m/s2 (IEC 60529)	
Weight		160g [5.6 oz]	
Housing Material		ABS plastic	
Housing Color		Light gray	Dark gray
Agency Approvals		EMC Directive (EN 61000-6-4, EN 61000-6-2) RoHS Directive (EN 50581) FCC Part 15, Subpart B Class A UL 464, CSA-C22.2 No. 205-M1983 UL Recognized (File S24210) Conforms to CE requirements	

To obtain the most current agency approval information, see the Agency Approval Checklist section on the specific part number's web page.

Wiring Diagram

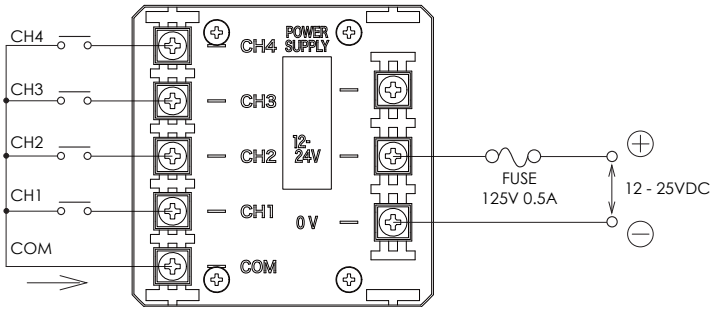

PATLITE® Audible Electronic Alarms

BSV Series Panel- or Surface-mount Electronic Alarms

Features

- Compact alarm that plays 15 prerecorded alarms
- Up to 90dB volume
- Meets IP54 standards when panel mounted
- Works with PNP inputs
- Designed to work in temperatures from -10 to 50°C [14 to 122°F]
- Polycarbonate construction
- 15 standard sounds
- Optional SD card for field configuration (sold separately)

BSV-24P-D

BSV Series Accessories

Part Number	Price	Description
SDV-2GP		2GB SD card

BSV Series Alarm Specifications

Part Number	BSV-24P-D	BSV-24P-W
Price		
Drawing Link	PDF	PDF
Description	Alarm	
Rated Voltage	12-24VDC	
Operating Voltage Range	10.8-26.4 VDC	
Rated Power Consumption	3.5 W	
Maximum Volume	85dB @ 1m	
Tone Type	Electronic (15 tones available)	
Operating Temperature	-10 to 50°C [14 to 122°F]	
Operating Ambient Humidity	Less than 85% (no condensation)	
Mounting Location	Panel mount: Indoor/outdoor Wall mount: Indoors	
Mounting Direction	Upright, sideways, inverted	
Protection	Panel mount: IP54 (upright mounting direction only) Wall mount: IP20	
Insulation Resistance	More than 1MΩ at 500VDC between terminals and chassis	
Withstand Voltage	500 VAC applied for 1 minute between terminals and chassis	
Vibration Resistance	70.0 m/s2 (in the x, y, and z directions for 2 hours each at 30Hz)	
Weight	100 [3.5 oz]	
Housing Material	Polycarbonate	
Housing Color	Dark gray	Off-white
Agency Approvals	EMC Directive (EN 61000-6-4, EN 61000-6-2) RoHS Directive (EN 50581) FCC Part 15, Subpart B Class A UL Recognized (File S24210)	

To obtain the most current agency approval information, see the Agency Approval Checklist section on the specific part number's web page.
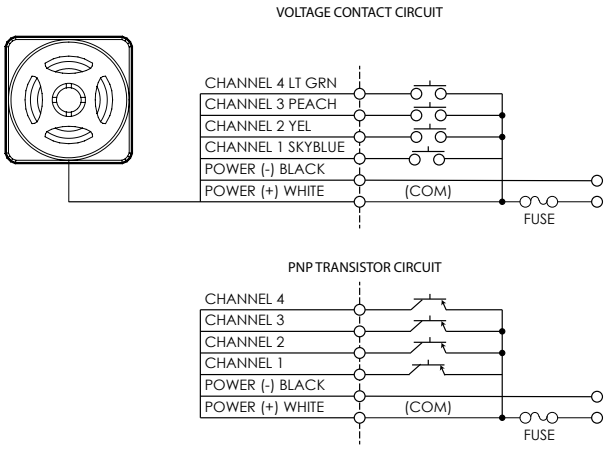
Wiring Diagram