WDP Series Definite Purpose Contactors

Features

- Rated current from 25-60A
- 1-, 2-, and 3-pole configurations at 25A, 30A, and 40A
- 3-pole configurations at 50A and 60A
- Enclosed coil standard for all 3-pole frame sizes
- Open coil standard for all 1- and 2-pole frame sizes
- Industry standard mounting plate provides easily accessible mounting holes
- Connection terminal box lug connections each with quick connect/disconnect terminals
- Coil is class B 266 °F [130 °C] insulation system with a wide range of voltages and 50/60 Hz ratings
- Double E magnet assembly provides optimal performance with reduced power consumption
- Base assembly made from high arc-resistant polyester and thermoset plastic
- Temperature range -40 to +158 °F [-40 to +70 °C]
- IP20 rating
- 5 kA SCCR with Fuse or Circuit Breaker:
  - 25A max fuse/CB 60A
  - 30A max fuse/CB 80A
  - 40A max fuse/CB 90A
  - 50A max fuse/CB 100A
  - 60A max fuse/CB 125A

Applications

- Air conditioning
- Resistive heating
- Refrigeration equipment
- Motors
- Welding
- Pumps
- Power supplies
- Food service equipment
- Compressors

Certifications

- UL 508 Recognized, File No. E330834
- IEC/EN 60947 Compliant
- Compliance to ARI-780 HVAC standards
- CSA file No. 266851

Accessories

Multiple optional auxiliary contact blocks with 250 VAC/VDC or 600 VAC max rating available:

- 1 N.O.+1 N.C. screw terminal
- 1 N.O.+1 N.C. quick connect
- 1 N.O.+1 N.C. quick connect microswitch
- 2 N.O.+2 N.C. quick connect microswitch

WDP 25 Series Contactor

WDP 50 Series Contactor

WDP Series Definite Purpose Contactors

Contactor Specifications

WDP Series 25-40 Amp DP Contactor Specifications

Model	Price	Qty.	Poles	FLA (A) 600 VAC max[1]	Resistive Loads @600 VAC (A)	Locked Rotor Amps (A)			Horsepower (hp)					Weight (lb)
						240/277V	480V	600V	1-Phase		3-Phase			
									120V	240/277V	240/277V	480V	600V	
WDP25-1L-120		1 ea.	1 N.O.+Shunt	25	35	150	125	100	1	2	-	-	-	0.51
WDP25-1L-230														
WDP25-2L-120			2 N.O.						2	3				0.64
WDP25-2L-230														
WDP25-3L-120			3 N.O.						2	5	10	15	20	0.97
WDP25-3L-230														
WDP30-1L-120			1 N.O. +Shunt	32	40	200	150	120	1	2	-	-	-	0.51
WDP30-1L-230														
WDP30-1L-24														
WDP30-2L-120			2 N.O.						2	3				0.64
WDP30-2L-230														
WDP30-2L-24														
WDP30-3L-120			3 N.O.						2	5	10	15	20	0.97
WDP30-3L-230														
WDP30-3L-24														
WDP30-3L-480														
WDP40-1L-120			1 N.O.+Shunt	40	50	240	200	160	2	3	-	-	-	0.51
WDP40-1L-230														
WDP40-2L-120			2 N.O.											0.64
WDP40-2L-230														
WDP40-3L-120			3 N.O.						3	7.5	10	20	25	0.97
WDP40-3L-230														
WDP40-3L-24														
WDP40-3L-480														

Notes: 1-Full load amperage applies at 240/277, 480, and 600V.

WDP Series 50-60 Amp DP Contactor Specifications

Model	Price	Qty.	Poles	FLA (A) 600 VAC max[1]	Resistive Loads @600 VAC (A)	Locked Rotor Amps (A)			Horsepower (hp)							Weight (lb)
						240/277V	480V	600V	1-Phase			3-Phase				
									110/120V	200/208V	240/277V	200/208V	240/277V	480V	600V	
WDP50-3L-120		1 ea.	3 N.O.	50	65	300	250	200	3	7.5	10	15	15	25	25	1.28
WDP50-3L-230																
WDP50-3L-24																
WDP60-3L-120				60	75	360	300	240	5	7.5	10	25	25	30	30	
WDP60-3L-230																
WDP60-3L-24																

Notes: 1-Full load amperage applies at 240/277, 480, and 600V.

WDP Series Definite Purpose Contactors

Contactor Specifications, continued

WDP Series 25-60 Amp DP Contactor Specifications	
Mechanical Life	***500,000 operations***
Electrical Life	250,000 operations
Line and Load Terminals	#10-32 Screw/Box Lug
Mounting	Vertical or Horizontal
Operating Temperature	-40 to +70 °C [-40 to +158 °F]
Insulation System	Class B 266 °F [130 °C]
Agency Approvals	UL file #E330834, Standard UL 60947-1, CSA file #266851

Notes: Applies to all WDP series contactors.

Terminal Specifications

WDP Series 25-60A DP Contactor Terminal Specifications

Model	*Copper Cable AWG (mm²)*				*Tightening Torque in-lb [N•m]*			*Quick Connects[1]*		
	Solid Wire w/Single Core		*Flexible Stranded Wire*		*Coil*	*Main Circuit*		*Power Terminals*	*Coil Terminals*	*0.250 Standard*
	Screw	*Lug*	*Screw*	*Lug*		*Screw*	*Lug*			
WDP25-1L Series	14-10 (2.5-6)	14-8 (2.5-10)	14-12 (2.5-6)	14-8 (2.5-10)	See note 2	20 [1.8-2]	40 [4-6]	Dual 0.250 QC (2)	Dual 0.250 QC [2]	Quad
WDP25-2L Series										Dual or Quad[3]
WDP25-3L Series										Dual
WDP30-1L Series	12-8 (4-10)									Quad
WDP30-2L Series										Dual or Quad[3]
WDP30-3L Series	16-8 (1.5-10)									Dual
WDP40-1L Series	2-8 (4-10)									Quad
WDP40-2L Series										Dual or Quad[3]
WDP40-3L Series	16-8 (1.5-10)									Dual
WDP50 Series	-	10-6 (6-16)	-	12-8 (4-10)		-	50 [4-7]	Dual 0.250 QC (2)	0.250 QC [2]	-
WDP60 Series		10-6 (6-16)		12-8 (4-10)			50 [4-7]	Dual 0.250 QC (2)	0.250 QC [2]	

[1] Quick connects (size 6.3mm, female) may be purchased on the web store www.automationdirect.com
[2] All coil connections are 0.25in quick-connect terminals only.
[3] Quad is standard.

Wiring Diagrams

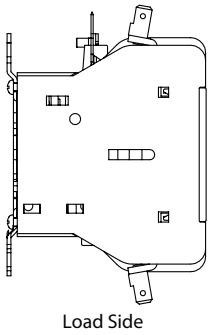

WDP25~40

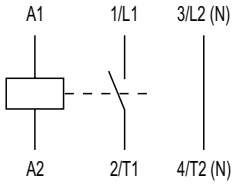

WDP... 1P 1NO+1Shunt

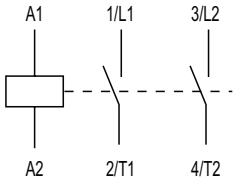

WDP... 2P 2NO

WDP25~60

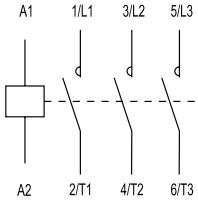

WDP... 3P 3NO

WDP Series Definite Purpose Contactors

Coil Specifications

WDP Series 25-60 Amp DP Contactor Coil Specifications								
Model	*Poles*	*Coil Voltage (50/60 Hz VAC)*	*Power Consumption[1] (VA)*				*Pick-Up Voltage*	*Drop-Out Voltage*
			50 Hz		60 Hz			
			In-Rush	Sealed	In-Rush	Sealed		
WDP25-1L-120	1 N.O.+Shunt	120	55	13	25	6.7	85-110% Us (see note 2)	20-65% Us (see note 2)
WDP25-1L-230		230						
WDP25-2L-120	2 N.O.	120			40	8.8		
WDP25-2L-230		230						
WDP25-3L-120	3 N.O.	120	51	12	47	9.3		
WDP25-3L-230		230						
WDP30-1L-120	1 N.O.+Shunt	120	55	13	25	6.7		
WDP30-1L-230		230						
WDP30-1L-24		24						
WDP30-2L-120	2 N.O.	120			40	8.8		
WDP30-2L-230		230						
WDP30-2L-24		24						
WDP30-3L-120	3 N.O.	120	51	12	47	9.3		
WDP30-3L-230		230						
WDP30-3L-24		24						
WDP30-3L-480		480						
WDP40-1L-120	1 N.O.+Shunt	120	55	13	25	6.7		
WDP40-1L-230		230						
WDP40-2L-120	2 N.O.	120			40	8.8		
WDP40-2L-230		230						
WDP40-3L-120	3 N.O.	120	51	12	47	9.3		
WDP40-3L-230		230						
WDP40-3L-24		24						
WDP40-3L-480		480						
WDP50-3L-120	3 N.O.	120	84	14	83	9.3		
WDP50-3L-230		230						
WDP50-3L-24		24						
WDP60-3L-120		120						
WDP60-3L-230		230						
WDP60-3L-24		24						

[1] Power consumption is the same for 24, 120, 240, 277, and 480 VAC.
[2] Us = Rated control supply voltage, per UL 60947-1

WDP Series Definite Purpose Contactors Accessories

WDP Series Accessories Selection Guide

Model	Type	Contact Arrangement	Connection Type[1]
WDPAXFC11	Auxiliary Contact	1 N.O.+1 N.C.	Screw
WDPAXFC11Q		1 N.O.+1 N.C.	Quick Connect
WDPAXFD11	Microswitch (SPDT)	1 N.O.+1 N.C.	Quick Connect
WDPAXFD22		2 N.O.+2 N.C.	Quick Connect

WDP Series DP Contactors Accessories Specifications

Model	Price	For Use With	Mounting	Wiring	Current Ratings: Break (A) 120 VAC	Break (A) 240 VAC	Break (A) 480 VAC	Break (A) 600 VAC	Make (A) 120 VAC	Make (A) 240 VAC	Make (A) 480 VAC	Make (A) 600 VAC	Continous (A) 120-600 VAC	125 or 250 VAC	120 VAC on Lamp Load	125 VDC	250 VDC
WDPAXFC11		WDP25-60 (3-Pole only)	Side mounted[2]	#6-32 screw terminal, wire range #14-22 AWG	3	1.50	0.75	0.60	30	15	7.5	6	5	10A, 1/3 hp	4A	1/2A	1/4A
WDPAXFC11Q				0.250 Quick Connection													
WDPAXFD11		WDP25-40 (3-Pole only)	One switch per side	0.250 Quick Connection										15A, 1/3 hp			
WDPAXFD22			Two switches per side	0.250 Quick Connection													
Agency Approvals	UL file #E330834, Standard UL 60947-1																

[1] Quick connects (size 6.3mm, female) may be purchased on the web store www.automationdirect.com
[2] Maximum of two may be mounted.

WDP Series Definite Purpose Contactors

Dimensions (in [mm])

WDP Series 25-40A One Pole Contactors

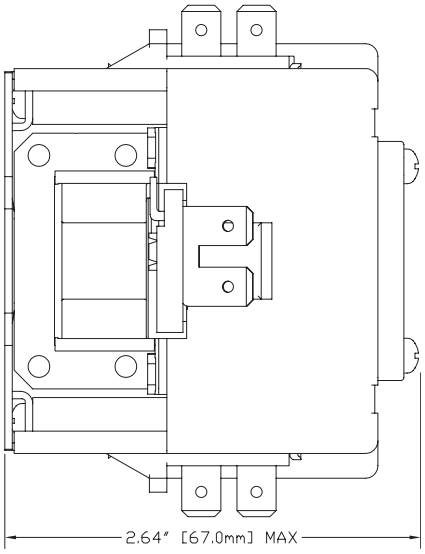

Side Detail

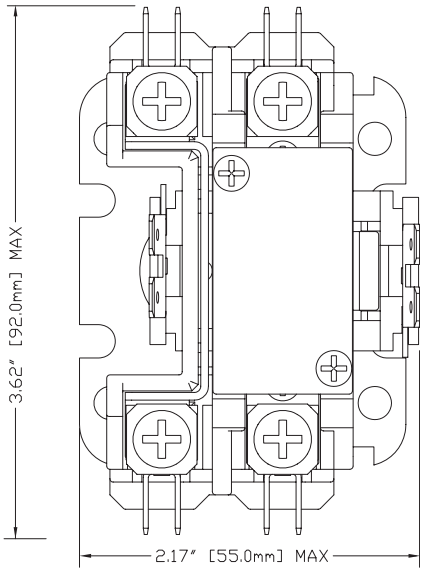

Front Detail

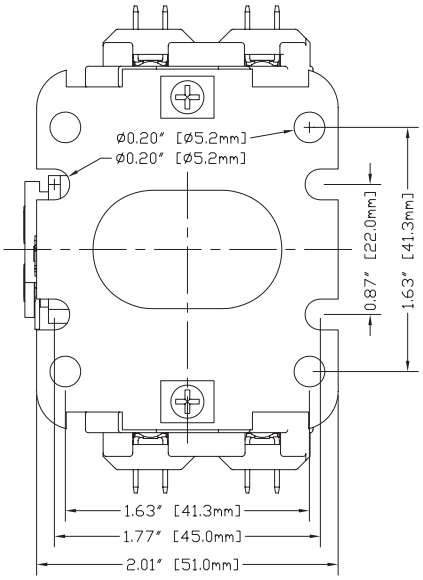

Base Detail

WDP Series 25-40A Two Pole Contactors

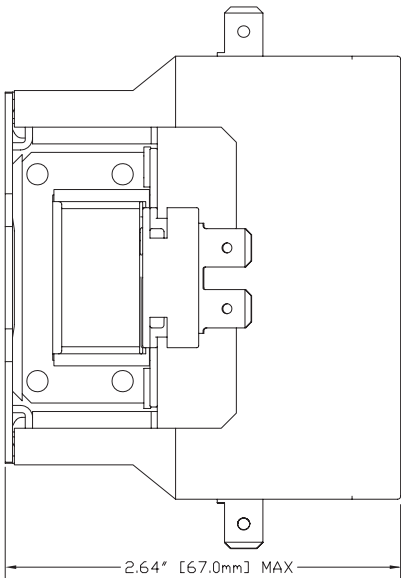

Side Detail

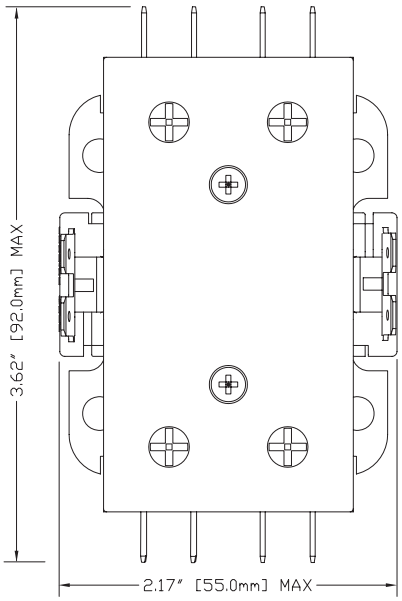

Front Detail

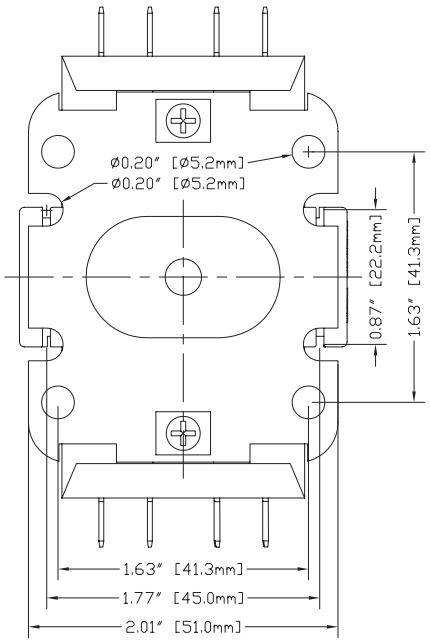

Base Detail

WDP Series Definite Purpose Contactors

Dimensions (in [mm])

WDP Series 25-40A Three Pole Contactors

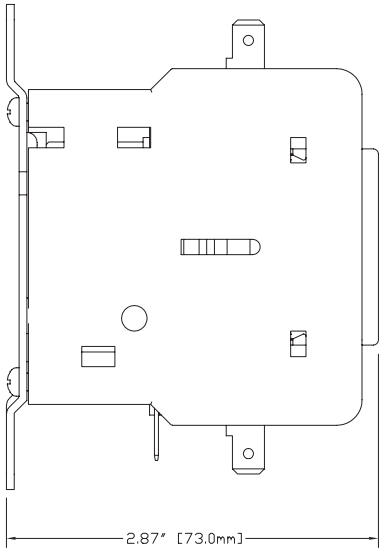

Side Detail

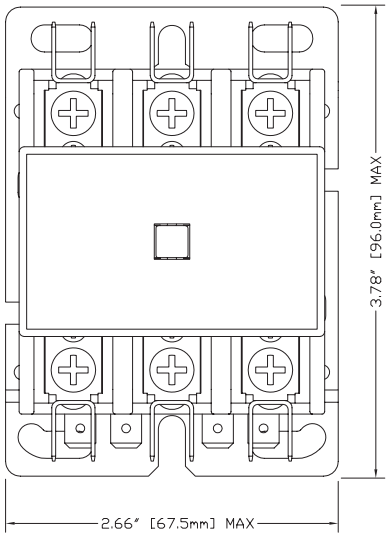

Front Detail

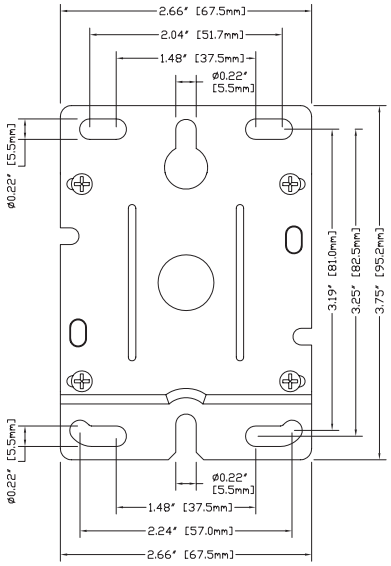

Base Detail

WDP Series 50-60A Three Pole Contactors

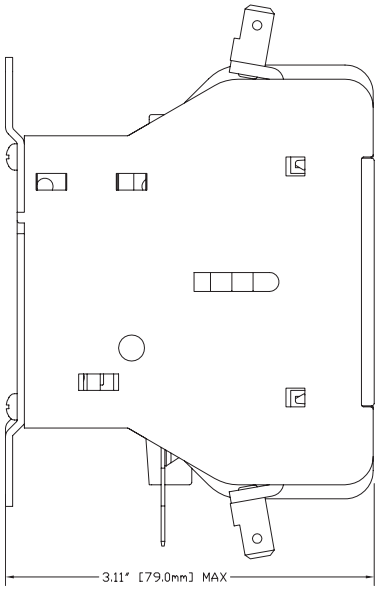

Side Detail

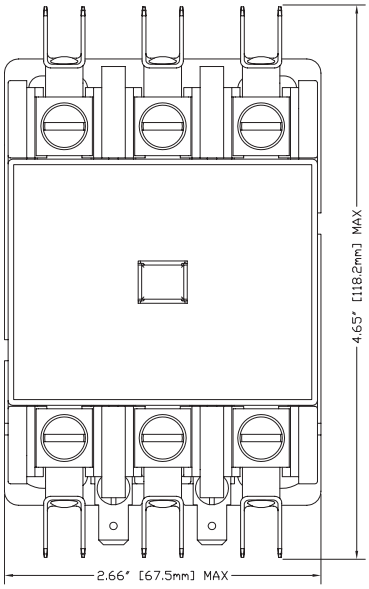

Front Detail

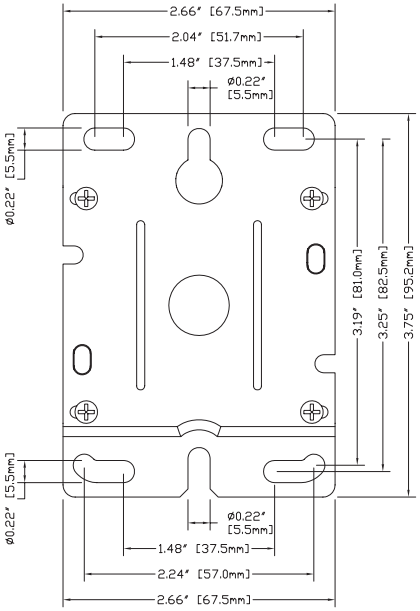

Base Detail

WDP Series Definite Purpose Contactors Accessories

Dimensions (in [mm])

***WDPAXFC11* Accessory**

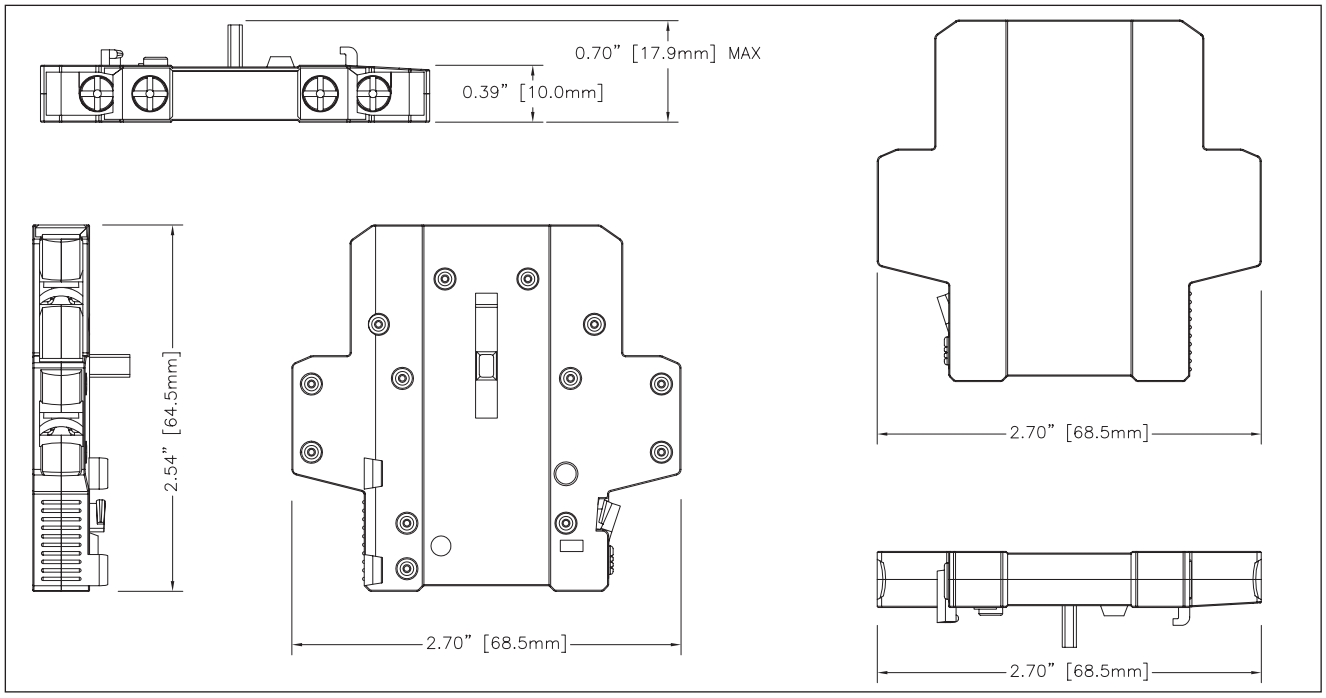

***WDPAXFC11Q* Accessory**

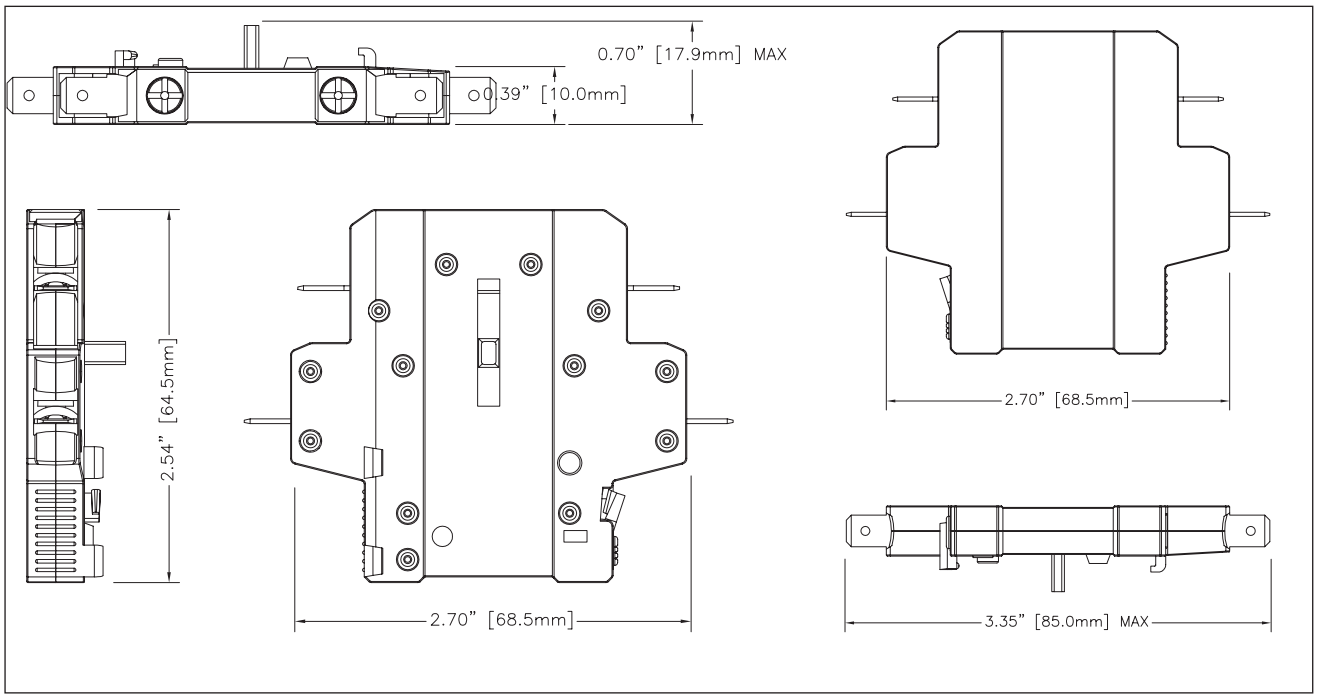

WDP Series Definite Purpose Contactors Accessories

Dimensions (in [mm])

***WDPAXFD11* Accessory**

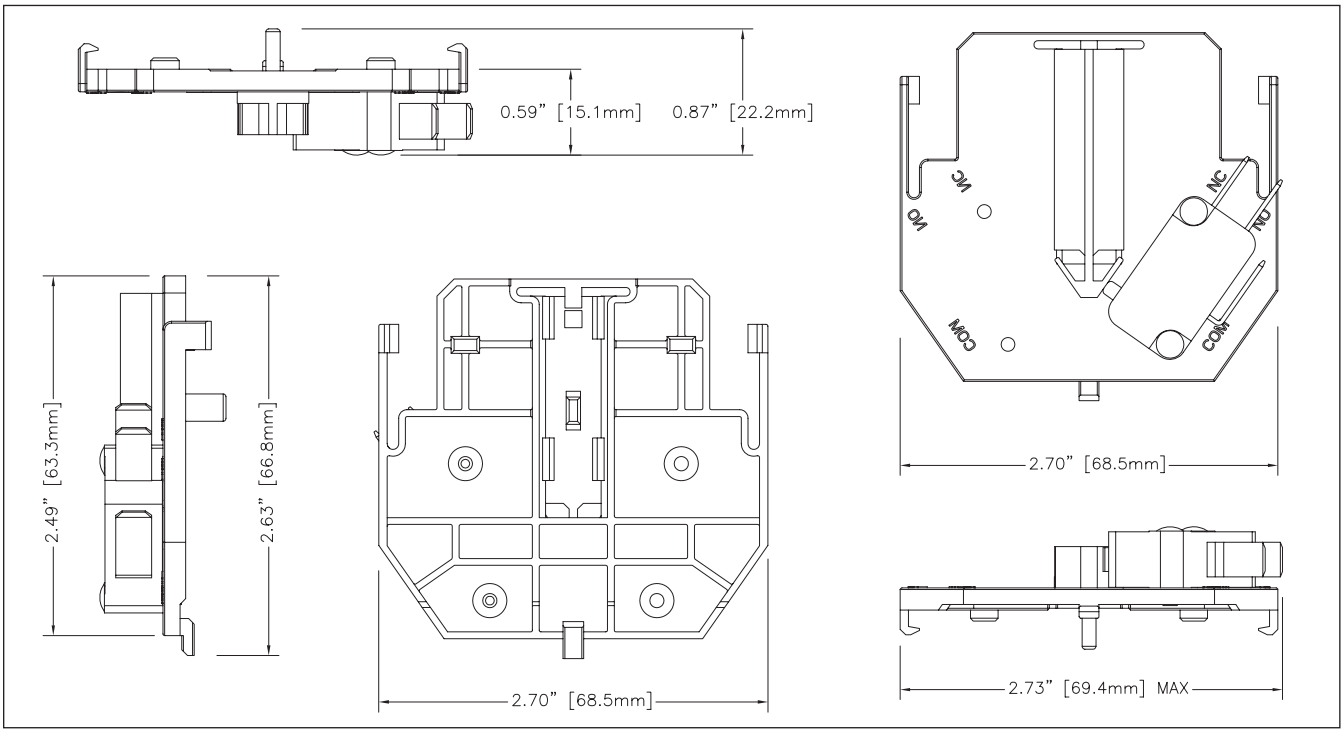
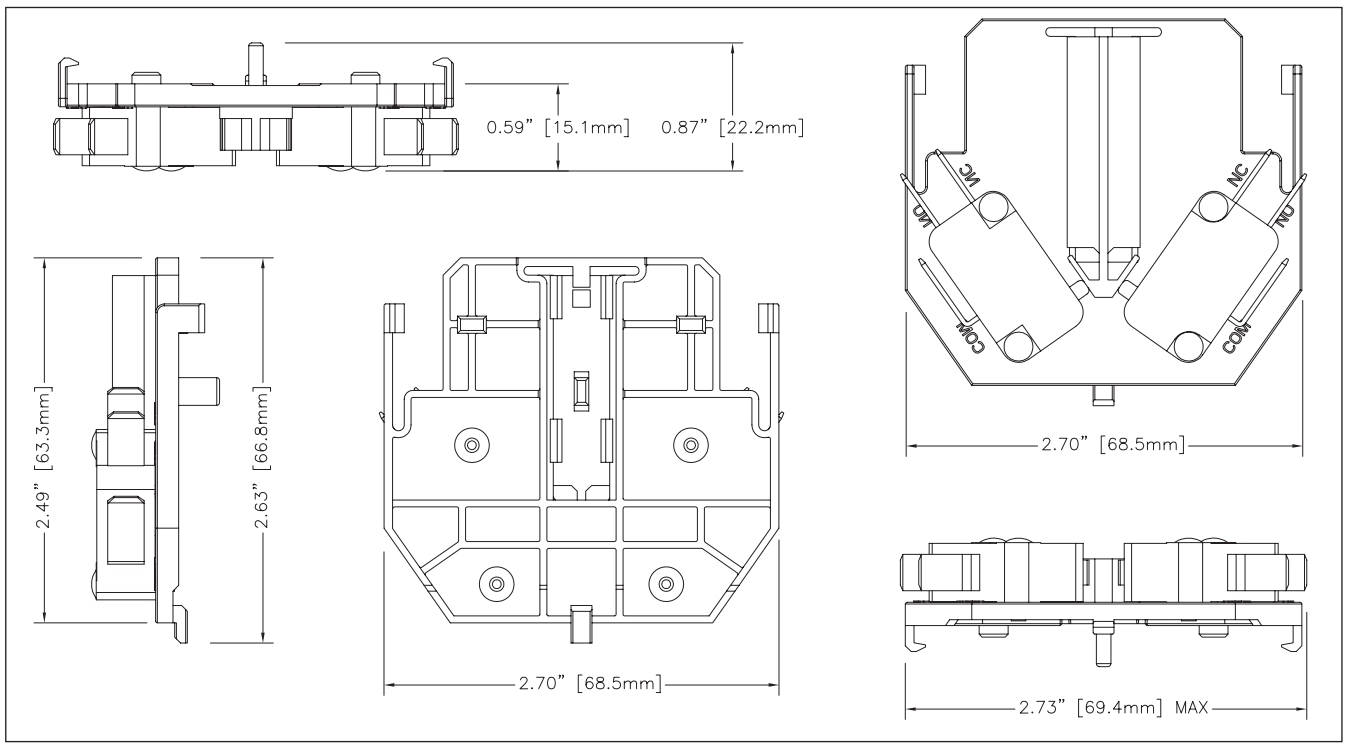
***WDPAXFD22* Accessory**