ACTR Series AC Current Transducers

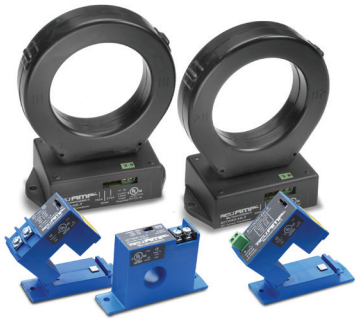

Why use ACTR transducers?

The current waveform of a typical linear load is a pure sine wave. However, in VFD and SCR applications the output waveforms are rough approximations of a sine wave and are non-sinusoidal. Each cycle will contain numerous spikes and dips.

The ACTR transducers use a mathematical algorithm called "True RMS," which integrates the actual waveform over time. The output is the amperage component of the true power (heating value) of the AC current waveform. True RMS is the only way to accurately measure distorted AC waveforms. Select ACTR transducers for non-linear loads or in "noisy" power environments.

Applications

VFD Controlled Loads

- VFD output indicates how the motor and attached load are operating.

SCR Controlled Loads

- Accurate measurement of phase angle fired SCRs. Current measurement gives faster response than temperature measurement.

Switching Power Supplies and Electronic Ballasts

- True RMS sensing is the most accurate way to measure power supply or ballast input power.

Features

- 4-20 mA output
- True RMS technology is accurate on distorted waveforms such as VFD or SCR outputs.
- Models with selectable sensing ranges
- Output is magnetically isolated from the input for safety and eliminates voltage drop.
- Built-in mounting feet with optional or integral 35mm DIN rail adapter depending on part number.
- Five-year warranty

ACTR Series AC Current Transducers

Part Number	Description	Pcs/ Pkg	Wt (lb)	Price
ACTR005-42L-F	AcuAMP AC current transducer, 1-phase, fixed core, 0–2 or 0–5A selectable sensing range, True RMS, 4–20 mA output.	1	0.30	
ACTR005-42L-S	AcuAMP AC current transducer, 1-phase, split core, 0–2 or 0–5A selectable sensing range, True RMS, 4–20 mA output.	1	0.36	
ACTR050-42L-F	AcuAMP AC current transducer, 1-phase, fixed core, 0–10, 0–20, or 0–50A selectable sensing range, True RMS, 4–20 mA output.	1	0.30	
ACTR050-42L-S	AcuAMP AC current transducer, 1-phase, split core, 0–10, 0–20, or 0–50A selectable sensing range, True RMS, 4–20 mA output.	1	0.36	
ACTR200-42L-F	AcuAMP AC current transducer, 1-phase, fixed core, 0–100, 0–150, or 0–200A selectable sensing range, True RMS, 4–20 mA output.	1	0.30	
ACTR200-42L-S	AcuAMP AC current transducer, 1-phase, split core, 0–100, 0–150, or 0–200A selectable sensing range, True RMS, 4–20 mA output.	1	0.36	
ACTR400-42L-S	AcuAMP AC current transducer, 1-phase, split core, 0–400A sensing range, True RMS, 4–20 mA output.	1	1.22	
ACTR500-42L-S	AcuAMP AC current transducer, 1-phase, flexible split core, 0–500A sensing range, True RMS, 4–20 mA output.	1	0.60	
ACTR600-42L-S	AcuAMP AC current transducer, 1-phase, split core, 0–600A sensing range, True RMS, 4–20 mA output.	1	1.37	
ACTR750-42L-F	AcuAMP AC current transducer, 1-phase, fixed core, 0–375, 0–500, or 0–750A selectable sensing range, True RMS, 4–20 mA output.	1	2.00	
ACTR800-42L-S	AcuAMP AC current transducer, 1-phase, split core, 0–800A sensing range, True RMS, 4–20 mA output.	1	1.38	
ACTR1000-42L-S	AcuAMP AC current transducer, 1-phase, flexible split core, 0–1000A sensing range, True RMS, 4–20 mA output.	1	0.60	
ACTR1200-42L-S	AcuAMP AC current transducer, 1-phase, split core, 0–1200A sensing range, True RMS, 4–20 mA output.	1	2.61	
ACTR2000-42L-F	AcuAMP AC current transducer, 1-phase, fixed core, 0–1000, 0–1333, or 0–2000A selectable sensing range, True RMS, 4–20 mA output.	1	2.00	
ACTR2000-42L-S	AcuAMP AC current transducer, 1-phase, flexible split core, 0–2000A sensing range, True RMS, 4–20 mA output.	1	0.60	
Accessories				
DRA-2B	35m DIN rail adapters, 1.70"x0.45"x0.83" [43.7x11.4x21.0 mm]	2	0.40	

Sensed Current Limits

Model	Range	Amps		
		Continuous	6 Sec	1 Sec
ACTR005	0 to 2A	80	125	250
	0 to 5A	100	125	250
ACTR050	0 to 10A	80	125	250
	0 to 20A	110	150	300
	0 to 50A	175	215	400
ACTR200	0 to 100A	200	300	600
	0 to 150A	300	450	800
	0 to 200A	400	500	1000
ACTR400	0 to 400A	1600	1920	6400
ACTR500	0 to 500A	4000	4400	5000
ACTR600	0 to 600A	1600	1920	6400
ACTR750	0 to 375A	750	1500	3750
	0 to 500A	750		
	0 to 750A	750		
ACTR800	0 to 800A	1600	1920	6400
ACTR1000	0 to 1000A	4000	4400	5000
ACTR1200	0 to 1200A	1600	1920	6400
ACTR2000 Fixed core	0 to 1000A	2000	4000	10 k
	0 to 1333A	2000		
	0 to 2000A	2000		
ACTR2000 Split core	0 to 2000A	4000	4400	5000

ACTR Series AC Current Transducers

ACTR Series Specifications

Specifications	-42L- Models up to 200 Amp	-42L-F Models 750 & 2000 Amp	-42L-S Models 500, 1000, 2000 Amp	-42L- Models 400, 600, 800, 1200A
Power Supply	24 VDC nominal, (12 to 40 VDC max) loop powered	24 VDC nominal, (12 to 40 VDC max) loop powered	24 VDC Nominal, 22-36 Volts Use Class 2 power supply or limitied power supply only	24 VDC nominal, 12 to 32 VDC max
Monitored Circuit	600 volts max			
Output Signal	4 -20 mA, loop powered, True RMS			
Output Limit	112% of standard output range maximum			
Output Impedance	600Ω @ 24 VDC		500Ω maximum	600Ω @ 24 VDC
Accuracy	1.0% FS (10-100% of range)			
Response Time	600ms			
Sensing Range	Selectable from 2 to 200A based on part number	Selectable from 375 to 2000A based on part number	500, 1000 or 2000A based on part number	400, 600, 800 or 1200A based on part number
Sensing Aperture	Fixed core: 0.74" [19mm] dia. Split core: 0.85" [21.6mm] sq.	Fixed core: 3.0" [76.2mm] dia.	4.5 in [114.3mm] dia.	2.22 X 1.19 in [56.3 X 30.2mm] ACT1200: 3.44 x 2.31 in [87.3 x 58.8mm]
Isolation Voltage	UL listed to 1,270 VAC, Tested to 5,000 VAC (1 min. max)	UL listed to 600 V	UL listed to 3,500 VAC	UL tested to 2200 VAC
Frequency Range	10 to 400 Hz		40 to 400 Hz	20 to 400 Hz
Case	UL 94 V-0 flammability rated thermoplastic			
Mounting	Built-in mounting feet or optional DRA-2B 35mm DIN rail adapter		Built-in 35mm DIN rail adapter	Built-in mounting feet or 35mm DIN rail adapter
Environmental	Operating Temperature: -4 to 122°F [-20 to 50°C]			
	Relative Humidity: 0-95% RH, Non-condensing			
	Pollution Degree 2			
	Altitude to 2000 meters			
Certifications	cULus listed (E222847), CE		cULus listed (E197592), CE	

Dimensions

Inches [mm]

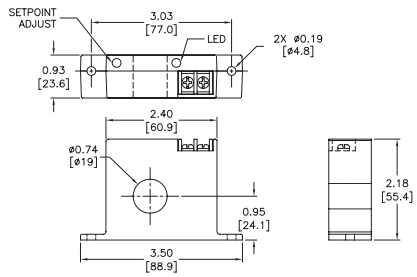

ACTR Series, Up to 200 Amp Fixed Core

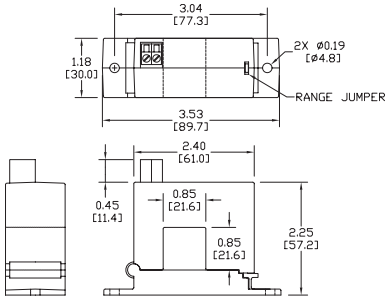

ACTR Series, Up to 200 Amp Split Core

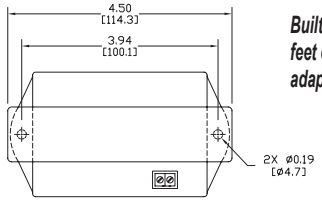

Built-in mounting feet or 35mm DIN rail adapter

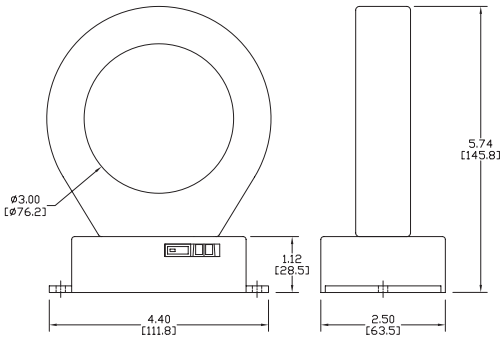

ACTR Series, 750 & 2000 Amp Fixed Core Large Aperture

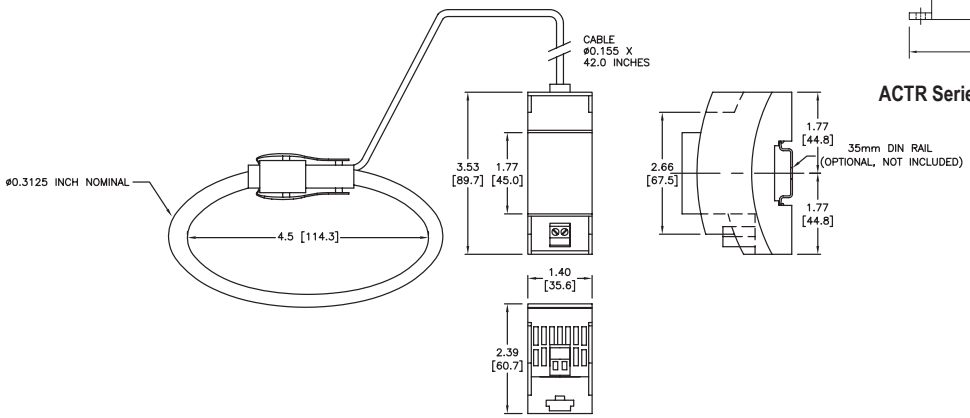

ACTR Series 500, 1000 & 2000 Amp Base & Flexible Split Core Loops

See our website www.AutomationDirect.com for complete Engineering drawings.

ACTR Series AC Current Transducers

Dimensions

Inches [mm]

ACTR Series, 400, 600, 800 Amp Split Core Large Aperture

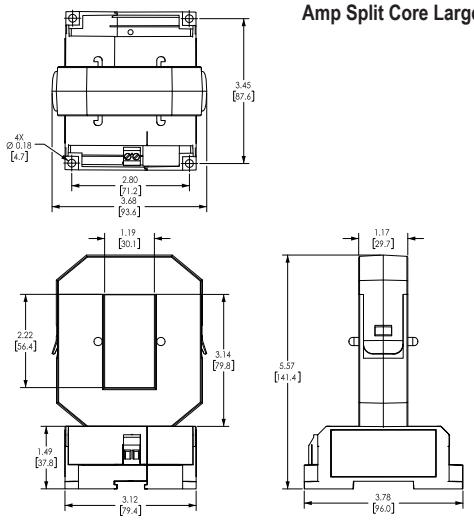

ACTR Series, 1200 Amp Split Core Large Aperture

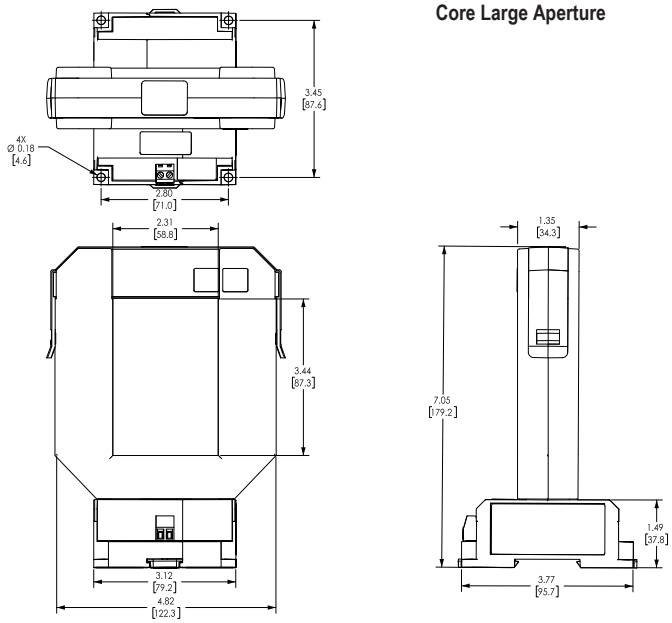

Wiring

ACTR Series, Up to 200 Amp

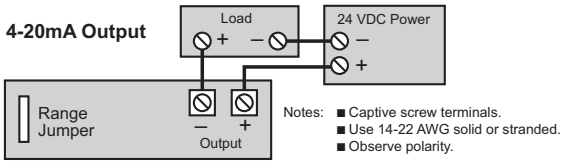

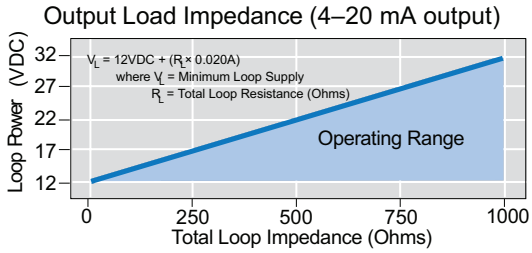

ACTR Series, 750 & 2000 Amp

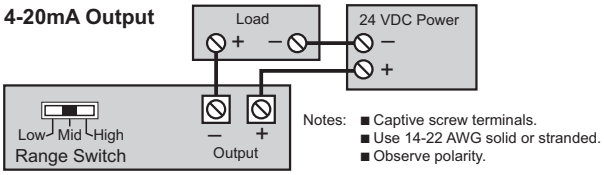

ACTR Series, 400, 600, 800, 1200 Amp

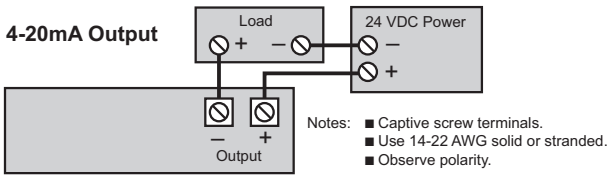

ACTR Series, Flexible Split Core 500, 1000 & 2000 Amp

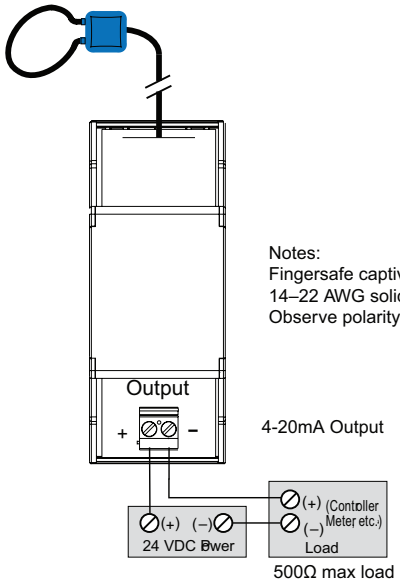

Notes:
Fingersafe captive screw terminals.
14–22 AWG solid or stranded.
Observe polarity.

Application Example

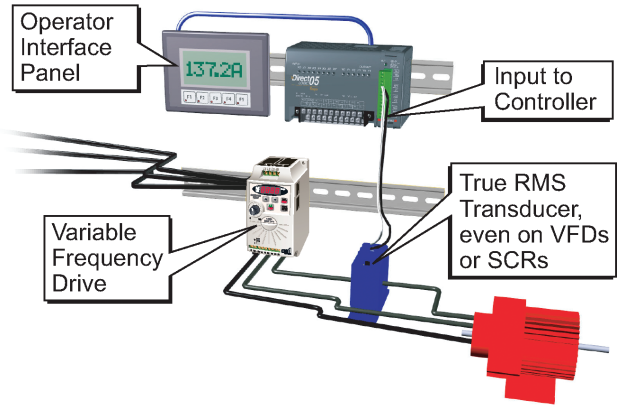

AC Current Switches, Transducers and Indicators

Overview

The AcuAMP series of AC current sensors is a family of high-performance current sensors offering outstanding features, flexibility, and durability at an incredible Price. Choose from a wide selection of current transducers, switches and indicators, all designed in a rugged industry-standard feed-through package, including both fixed core and split core models.

AcuAMP current sensors are available with a broad selection of input sensing ranges for maximum flexibility across many current ratings. The current transducer output choices include 4-20 mA, 24 VDC loop-powered, and 0 to 10 volt self-powered analog outputs. The Current Switch outputs include isolated solid state switches available in Normally Open and Normally Closed configurations or SPDT relays.

Models with output time delay are also offered in the Current Switch series. The ACL1 Current Indicator senses AC current ranging from 0.5 to 100A and requires no power for the indicating LED.

These current sensors can be mounted in a panel or attached to the monitored conductor with a wire tie. Use the Selection Guide below to find the best sensor for your requirements.

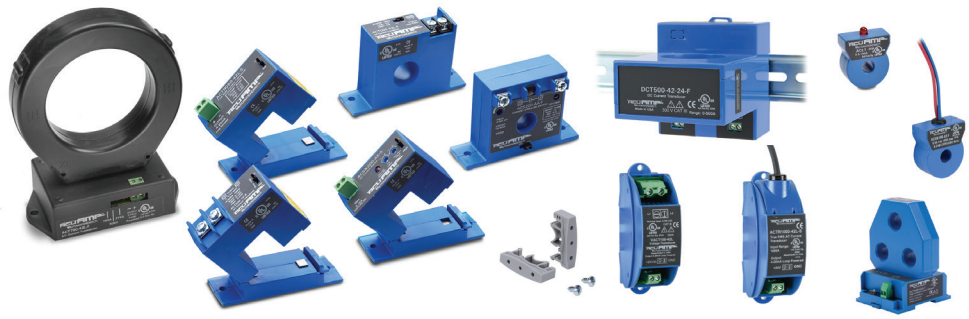

AcuAMP AC Current Transducer Selection Guide

Specifications	*Single-Phase Transducer*	*Single-Phase Transducer (True RMS)*	*3-Phase Transducer*	*3-Phase Transducer (True RMS)*
Series	*ACT*	*ACTR*	*3ACT*	*3ACTR*
Sensing Range	Selectable: ACT005: 0 to 2A 0 to 5A ACT050: 0 to 10A 0 to 20A 0 to 50A ACT200: 0 to 100A 0 to 150A 0 to 200A ACT750: 0 to 375A 0 to 500A 0 to 750A ACT2000: 0 to 1000A 0 to 1333A 0 to 2000A Fixed range: ACT400 0 to 400A ACT600 0 to 600A ACT800 0 to 800A ACT1200 0 to 1200A	Selectable: ACTR005: 0 to 2A 0 to 5A ACTR050: 0 to 10A 0 to 20A 0 to 50A ACTR200: 0 to 100A 0 to 150A 0 to 200A ACTR750: 0 to 375A 0 to 500A 0 to 750A ACTR2000: 0 to 1000A 0 to 1333A 0 to 2000A Fixed range: ACTR400: 0 to 400A ACTR500: 0 to 500A ACTR600: 0 to 600A ACTR800: 0 to 800A ACTR1000: 0 to 1000A ACTR1200: 0 to 1200A ACTR2000: 0 to 2000A	Selectable: 3ACT030: 0 to 10A 0 to 15A 0 to 30A 3ACT100: 0 to 30A 0 to 50A 0 to 100A 3ACT200: 0 to 100A 0 to 150A 0 to 200A	Selectable: 3ACTR030: 0 to 10A 0 to 15A 0 to 30A 3ACTR100: 0 to 30A 0 to 50A 0 to 100A 3ACTR200: 0 to 100A 0 to 150A 0 to 200A
Output	-10 models: 0–10 VDC, self-powered -42L models: 4–20 mA, loop-powered	4–20 mA, loop-powered True RMS	4 -20 mA	4–20 mA, True RMS
Frequency Range	-10 models: 50 to 60 Hz -42L models up to 200A: 20 to 100 Hz -42L models 400, 600, 800, 1200A: 50 to 60 Hz sinusoidal waveforms only	20 to 400 Hz; (40 to 400 Hz flexible split core models) sinusoidal and non-sinusoidal waveforms	50 to 60 Hz sinusoidal waveforms only	30 to 100 Hz sinusoidal and non-sinusoidal waveforms
Sensing Aperture	ACT005, ACT050, ACT200: Fixed core: 0.75in [19mm] dia. Split core: 0.85in [21.6mm] sq. ACT750, ACT2000: Fixed core: 3.0in [76.2mm] dia. ACT400, ACT600, ACT800: Split core: 2.22 X 1.19in [56.3 X 30.2mm] ACT1200 Split core: 3.44 X 2.31in [87.3 X 58.8mm]	ACTR005, ACTR050, ACTR200: Fixed core: 0.75 in [19mm] dia. Split core: 0.85 in [21.6mm] sq. ACTR750, ACTR2000: Fixed core: 3.0 in [76.2mm] dia. ACTR500, ACTR1000, ACTR2000: Flexible split core: 4.5in [114.3mm] dia. ACTR400, ACTR600, ACTR800: Split core: 2.22 X 1.19in [56.3 X 30.2mm] ACTR1200 Split core: 3.44 X 2.31in [87.3 X 58.8mm]	3x - Fixed core: 0.86in [21.8mm] dia.	3x - Fixed core: 0.86in [21.8mm] dia.

AC Current Switches, Transducers and Indicators

AcuAMP AC Current Switch Selection Guide

Specifications	AC Current Switches							
Series	**ACSN100**	**ACSN250**	**ACS150**	**ACSL**	**ACS200**	**ACS050/ACS200**	**ACS035/ACS400**	**ACSX**
Sensing Range	0 to 100A	0 to 250A	Fixed core: 1 to 150A Split core: 1.75 to 150A	0 to 50A	Jumper Selectable: Fixed core: 1 to 6A 6 to 40A 40 to 175A Split core: 1.75 to 6A 6 to 40A 40 to 200A	1 to 200A	2 to 400A	Jumper Selectable: Fixed core: 1.5 to 12A 12 to 55A 55 to 175A Split core: 2 to 12A 12 to 55A 55 to 200A
Setpoint (Trip Point)	Non-adjustable: 0.5 A	Non-adjustable: Fixed core: 0.75A Split core: 1.25A	Adjustable: Fixed core: 1-150 A (15-turn potentiometer) Split core: 1.75-150 A (4-turn potentiometer) Monitored load current required to adjust setpoint	Adjustable (3/4-turn potentiometer): ACSL010: 1-10A ACSL020: 2-20A ACSL050: 10-50A Monitored load current not required to adjust setpoint	Adjustable: (4-turn or 15-turn potentiometer) Fixed core: 1-175A Split core: 1.75-200A Monitored load current required to adjust setpoint	Adjustable: (Single turn potentiometer): ACS050: 1-50A ACS200: 4-200A	Adjustable: (3/4-turn potentiometer): ACS035: 2-35A ACS400: 25-400A	Adjustable: Fixed core: 1.5-175A (15-turn potentiometer) Split core: 2-200A (4-turn potentiometer) Monitored load current required to adjust setpoint
Output	Isolated solid state: Normally Open 0.15 A @ 120 VAC or VDC	Isolated solid state: Normally Open 0.15 A @ 240 VAC or VDC	Isolated solid state: Normally Open 0.15 A @ 240 VAC or VDC Normally Closed 0.2 A @ 135 VAC or VDC	Isolated solid state: Normally Open AC: 0.15 A @ 240 VAC	Isolated solid state: Normally Open or Normally Closed AC model: 1A @ 240 VAC Normally Open AC model: 3A @ 120 VAC Normally Open or Normally Closed DC model: 0.15 A @ 30 VDC	Isolated solid state: Normally Open 1A @ 240 VAC	Two Independent Single Pole, Double Throw electro-mechanical relays AC: 1A @ 120 VAC DC: 2A @ 30 VDC	Isolated solid state: Normally Open or Normally Closed AC model: 1A @ 240VAC Normally Open AC/DC model: 0.15 A @ 240 VAC/VDC Normally Closed AC/DC model: 0.2 A @ 135 VAC/VDC
Frequency Range	50 to 400 Hz	6 to 100 Hz	6 to 100 Hz	10 to 100 Hz	6 to 100 Hz	40 to 100 Hz	40 to 65 Hz	50 to 100 Hz
Response Time	N/A	120 ms	120 ms	100ms & 2s inrush delay	40 to 250 ms	0.50 sec. 5% over set point 0.20 sec. 50% over set point 0.15 sec. 100% over set point	40 - 120 ms	Field adjustable time delay: 0.12 to 15 seconds
Sensing Aperture	0.30in [8.13mm] dia.	Fixed core: 0.75in [19mm] dia. Split core: 0.85in [21.7mm] sq.	Fixed core: 0.75in [19mm] dia. Split core: 0.85 in [21.7mm] sq.	Fixed core: 0.55in [13.97mm] dia. Split core: 0.85 in [21.7 mm] sq.	Fixed core: 0.55in [13.97mm] dia. Split core: 0.85 in [21.7 mm] sq.	0.75in [19mm] dia.	1.31in [33.3mm] dia.	Fixed core: 0.75in [19mm] dia. Split core: 0.85in [21.7mm] sq.

AC Current Switches, Transducers and Indicators

AcuAMP AC Current Transducer/Switch and Indicator Selection Guide			
Specifications	***AC Current Transducer***	***AC Current Transducer/Switch***	***Indicator***
Series	***ACTH***	***ACTS***	***ACL1***
Sensing Range	0 to 50A	1 to 200A	0 to 100A
Setpoint (Trip Point)	Not Applicable	Adjustable: (Single turn potentiometer): ACTS050: 1-50A ACTS200: 4-200A	Non-adjustable: 0.5 A
Output	4 -20 mA, loop-powered adaptive True RMS	4-20mA analog output and isolated solid state: Normally Open 1A @ 240 VAC	LED Only (flashing, red)
Frequency Range	40 to 400 Hz	40 to 400 Hz	50 to 400 Hz
Response Time	400 ms at 100% duty cycle, or duty cycle period plus 40ms	Switch: 0.50 sec. 5% over set point 0.20 sec. 50% over set point 0.15 sec. 100% over set point Analog: < 0.30 sec. 90% step change < 0.40 sec. 100% step change	N/A
Sensing Aperture	0.86 in [21.9mm] sq.	0.75 in [19mm] dia.	0.30 in [7.6mm] dia.

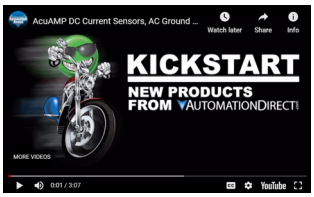

Click on the thumbnail or go to https://www.automationdirect.com/VID-CT-0001 for a short introductory video on the AcuAmp Current Switches, Transducers and Indicators

AC Current Sensors, Switches and Transducers Application Guide

Application Guide

AcuAMP current sensors are a great fit for many applications including material handling, fan and pump applications, and heating systems. With current transducers, current switches and current indicators, this sensor family gives you valuable data for processes ranging from monitoring loads to preventive maintenance. Models with the ability to read True RMS non-sinusoidal waveforms make it easy to monitor applications using variable frequency drives.

Use the application examples to help choose the best sensor model for your application.

Pump Jam & Suction Loss Protection

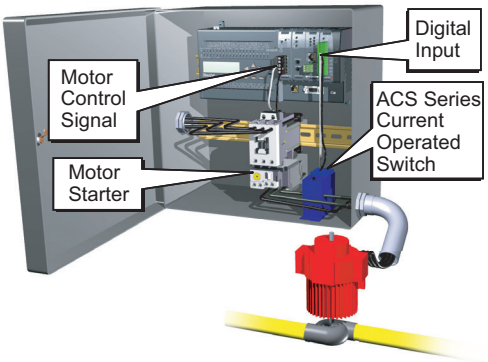

Heater Life Prediction

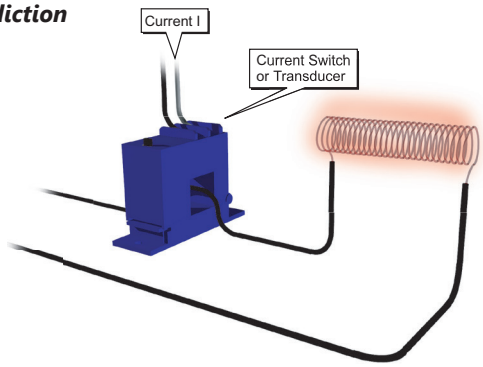

Crusher/Grinder/Shredder Motor Interlocks

The performance of size reduction equipment like crushers or grinders can be optimized by controlling the in-feed in order to:

- Help prevent jamming
- Improve the uniformity of the resultant product
- Enhance overall production efficiency

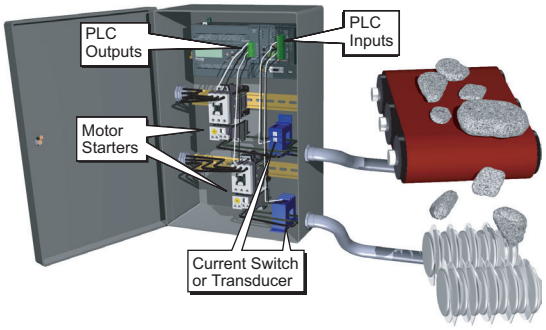

Pump Load Monitoring

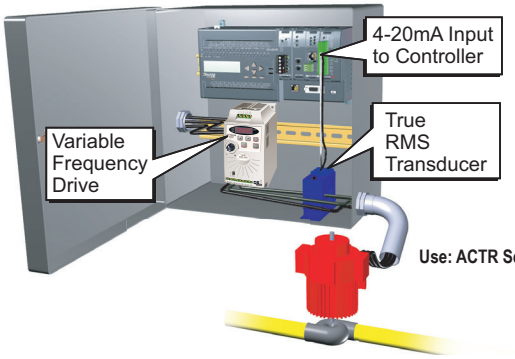

Use: ACTR Series - True RMS Current

Lamp Failure Detection

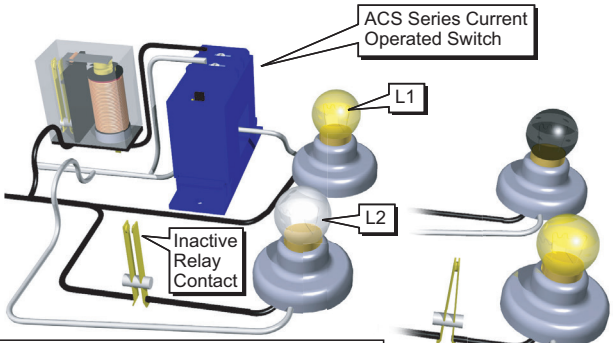

When L1 fails, the current drops. The Current Operated Switch detects the drop in current and activates the relay which turns on the back-up lamp L2. The system may be configured fail-safe by using a Normally Open Current switch together with Normally Closed relay contacts
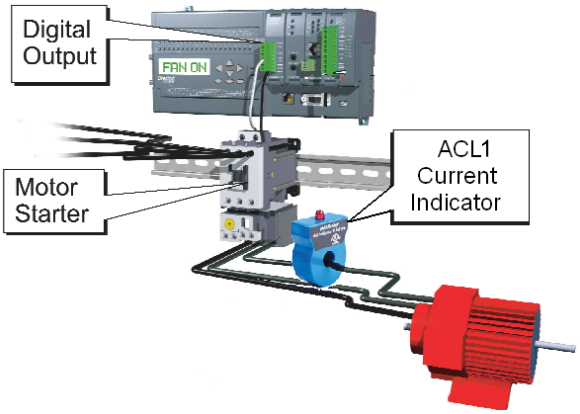
Electric Motor Load Status