# Pneumatic Push-to-Connect Fittings

**NITRA** pneumatic push-to-connect fitting bodies are made of a strong thermoplastic (PBT) and have stainless steel tube gripping claws. Threaded components are made of nickel-plated brass and have pre-applied Teflon thread sealant (O-ring on #10-32, M5 and G threads). The bodies of elbow and tee fittings with threaded connections can be rotated after installation to allow for variations in piping direction. NITRA Polyurethane and Nylon 12 tubing is easily connected by simply inserting the tubing end into the fitting. To release the tubing, press the circular release ring and the tubing can be easily pulled out.

## Features

- Large selection of fitting configurations
- Inch and metric sizes available
- NPT, BSPT (R), and BSPP (G) threads available
- Tough thermoplastic bodies, stainless steel tube gripping claws, nickel-plated threads with pre-applied Teflon sealant (O-ring on #10-32, M5 and G threads)
- Threaded Elbow and Tee bodies can be rotated after installation
- Release rings are color coded to differentiate between inch and metric sizes
- For use with air only
- Working pressure: -29.5" Hg to 150 psi.
- Working temperature: 32 to 140°F (0 to 60°C)

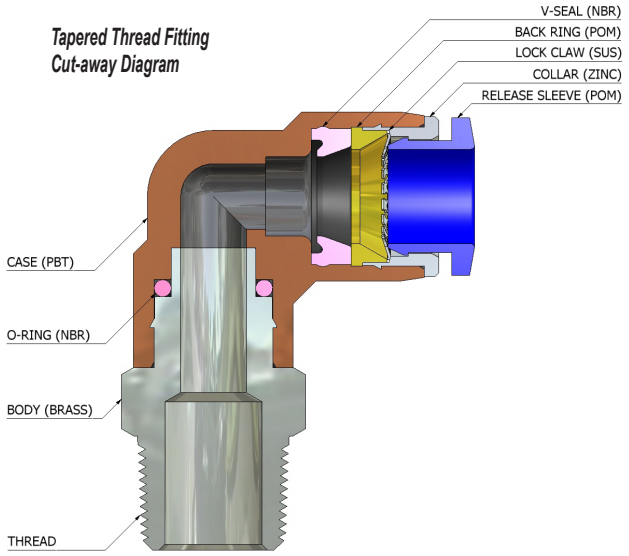


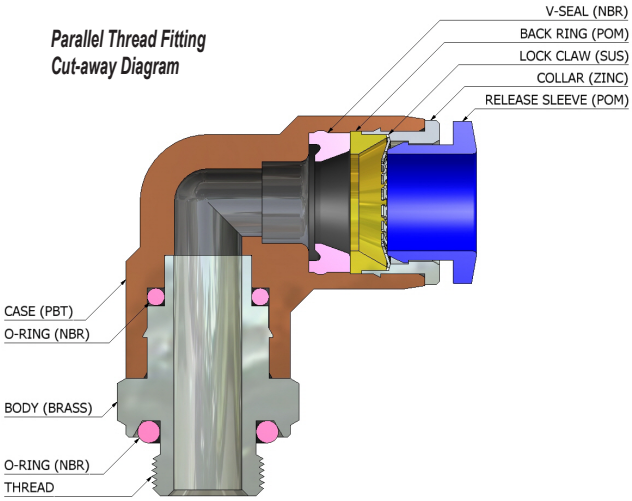

# Pneumatic Push-to-Connect Fittings

Inch Fitting

Metric Fitting

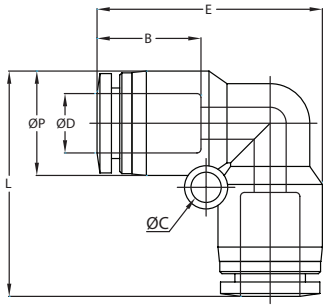


**NITRA** pneumatic push-to-connect union elbow fitting with thermoplastic (PBT) body and stainless steel tube gripping claws. For use with polyurethane or nylon tubing. Five fittings per package.

| NITRA Union Elbow | | | | | | | | | | | |
|---|---|---|---|---|---|---|---|---|---|---|---|
| *Inch Sizes - dimensions in inches (in.)* | | | | | | | | | | | |
| *Part No.* | *Price* | *Size* | *øD* | *øP* | *L* | *E* | *øC* | *B* | *Orifice* | *Package Weight (lbs)* | *Qty. per pack* |
| *UL18* | $10.50 | 1/8 in. | 1/8 | 0.30 | 0.70 | 0.70 | 0.13 | 0.44 | 0.10 | 0.1 | 5 |
| *UL532** | $7.75 | 5/32 in. (4 mm) | 5/32 | 0.41 | 0.95 | 0.95 | 0.13 | 0.59 | 0.12 | 0.1 | 5 |
| *UL14* | $9.00 | 1/4 in. | 1/4 | 0.51 | 1.09 | 1.09 | 0.14 | 0.66 | 0.19 | 0.1 | 5 |
| *UL38* | $12.50 | 3/8 in. | 3/8 | 0.69 | 1.35 | 1.35 | 0.18 | 0.79 | 0.31 | 0.3 | 5 |
| *UL12* | $13.50 | 1/2 in. | 1/2 | 0.83 | 1.60 | 1.60 | 0.18 | 0.90 | 0.35 | 0.4 | 5 |
| *Metric Sizes - dimensions in millimeters (mm)* | | | | | | | | | | | |
| *UL6M* | $8.25 | 6 mm | 6 | 12.5 | 27.3 | 27.3 | 4.3 | 16.4 | 5.0 | 0.2 | 5 |
| *UL8M* | $10.50 | 8 mm (5/16 in.) | 8 | 14.5 | 31.3 | 31.3 | 4.3 | 18.7 | 7.0 | 0.2 | 5 |
| *UL10M* | $13.00 | 10 mm | 10 | 17.5 | 33.9 | 33.9 | 4.3 | 20.1 | 8.0 | 0.4 | 5 |
| *UL12M* | $13.00 | 12 mm | 12 | 20.5 | 38.8 | 38.8 | 4.3 | 22.8 | 10.0 | 0.4 | 5 |
| *UL16M* | $31.50 | 16 mm | 16 | 25.5 | 47.0 | 47.0 | 5.3 | 24.1 | 13.0 | 0.4 | 5 |

*** UL532 has blue release rings**

Inch Fitting

Metric Fitting

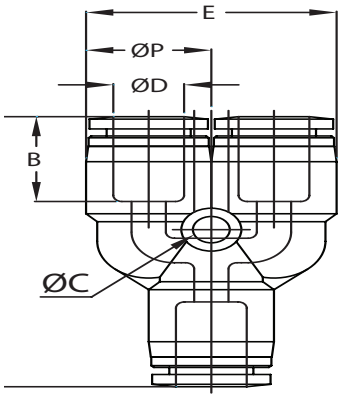


**NITRA** pneumatic push-to-connect union Y fitting with thermoplastic (PBT) body and stainless steel tube gripping claws. For use with polyurethane or nylon tubing. Five fittings per package.

| NITRA Union Y | | | | | | | | | | | |
|---|---|---|---|---|---|---|---|---|---|---|---|
| *Inch Sizes - dimensions in inches (in)* | | | | | | | | | | | |
| *Part No.* | *Price* | *Size* | *øD* | *øP* | *L* | *E* | *øC* | *B* | *Orifice* | *Package Weight (lbs)* | *Qty. per pack* |
| *UY18* | $21.50 | 1/8 in. | 1/8 | 0.30 | 1.06 | 0.60 | 0.13 | 0.44 | 0.09 | 0.1 | 5 |
| *UY532** | $13.50 | 5/32 in. (4 mm) | 5/32 | 0.41 | 1.43 | 0.83 | 0.13 | 0.63 | 0.10 | 0.1 | 5 |
| *UY14* | $15.50 | 1/4 in. | 1/4 | 0.51 | 1.57 | 1.02 | 0.13 | 0.70 | 0.16 | 0.1 | 5 |
| *UY38* | $19.00 | 3/8 in. | 3/8 | 0.69 | 1.85 | 1.38 | 0.18 | 0.78 | 0.31 | 0.4 | 5 |
| *UY12* | $23.50 | 1/2 in. | 1/2 | 0.83 | 2.16 | 1.65 | 0.18 | 0.90 | 0.41 | 0.4 | 5 |
| *Metric Sizes - dimensions in millimeters (mm)* | | | | | | | | | | | |
| *UY6M* | $13.00 | 6 mm | 6 | 13.0 | 39.3 | 26.0 | 3.3 | 17.6 | 5.2 | 0.2 | 5 |
| *UY8M* | $13.50 | 8 mm (5/16 in.) | 8 | 14.6 | 44.1 | 29.2 | 4.3 | 19.0 | 6.8 | 0.2 | 5 |
| *UY10M* | $18.00 | 10 mm | 10 | 17.5 | 47.1 | 35.0 | 4.5 | 19.8 | 8.0 | 0.4 | 5 |
| *UY12M* | $23.00 | 12 mm | 12 | 21.0 | 54.1 | 42.0 | 4.5 | 22.7 | 10.3 | 0.4 | 5 |

*** UY532 has blue release rings**

# Pneumatic Fitting Instructions and Caution Information

## Assembly Instructions

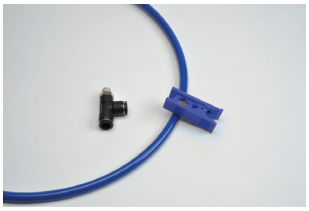

Prepare the **NITRA** tubing for cutting and make sure to have the proper tubing cutters like the **NITRA** TC-12 or TC-20.

(If cutting bonded tubing, carefully split the tubes with a knife and then pull apart as needed.)

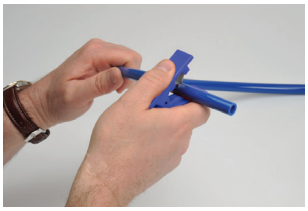

Cut the **NITRA** tubing at a right angle with the axis using a standard tube cutter. After cutting the tubing, make sure to check the cut end for an even cut with no debris.

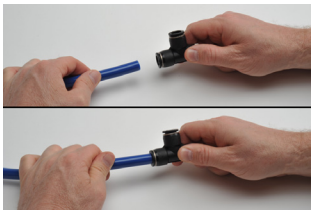

Insertion of the **NITRA** tubing into fittings

- Make sure the tube is inserted fully into the fitting.
- Pull the tube gently to make sure it does not release.
- If the tube end is damaged or deformed, leakage or unexpected tube release may occur. Make sure to check tubing end thoroughly.

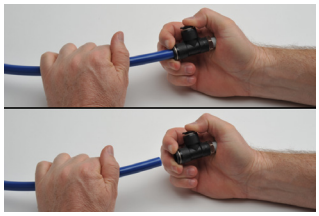

Removing the **NITRA** tubing from fittings

- Make sure the pressure in the tube is zero before releasing the tube from the fittings.
- To release the tubing, press the release ring at the end of the fitting and pull the tube with one hand.
- Inspect the released tube end and make a clean cut if it is damaged or deformed.

## Common Precautions for Tubing and Fitting Products

**Warnings:**

- Do not use fittings with media other than air.
- Avoid installing with tubing under tension or with excessive bends.
- Do not use the product where weld spatters occur as fire may occur.
- Product damage or air leakage may occur at places where there is excessive rotation or vibration of the fittings.
- Use caution in water as the product may be damaged by surge pressure.
- Do not use the product where it is directly exposed to fluids such as cutting oil, lubricating oil, and coolant oil.

**Cautions:**

- Assemble the tubing only after cleaning away impurities such as dust and excess debris.
- Fitting products are recommended for air systems only. Avoid using for other purposes.
- When using tubing other than **NITRA** brand with **NITRA** fittings, be sure the tubing OD conforms to the tolerances in Table 1 below.

**Table 1 - Tolerance of the Outer Diameter of the Tube**

| *Tube Specifications* | ø5/32 [ø4] | ø1/4 [ø6] | ø5/16 [ø8] | ø3/8 [ø10] | ø1/2 [ø12] |
|---|---|---|---|---|---|
| *Permissible tolerance* | + 0.005 [+/- 0.13] | | | | |

**Pneumatic Tubing Cutter**

| *Part Number* | *Description* | *Pcs/Pkg* | *Wt (lb)* | *Price* |
|---|---|---|---|---|
| *TC-12* | NITRA pneumatic tubing cutter for use with 1/8 to 1/2 inch and 4 to 12 mm outside diameter flexible plastic tubing. | 1 | 0.1 | $5.75 |
| *TC-20* | NITRA pneumatic heavy duty tubing cutter for use with polyurethane, nylon and other flexible tubing up to 2 inch [50mm] outside diameter. | 1 | 0.2 | $11.50 |

*TC-12*

*TC-20*