F-Series All Stainless Steel Pneumatic Cylinders - 3/4 inch Bore

3/4 in. Bore, Double-acting, Front Nose Mount

NITRA pneumatic stainless steel round body, interchangeable, non-repairable cylinder, 3/4 inch bore, 1/8 inch female NPT ports, double acting, front nose mount.

All Stainless Steel Cylinder 3/4 in. bore, double acting, front nose mount				
Part Number	***Stroke Length (in.)***	***Weight (lbs)***	***Price***	***Drawing Link***
F12005DN	0.5	0.3	$113.00	PDF
F12010DN	1.0	0.3	$114.00	PDF
F12015DN	1.5	0.5	$115.00	PDF
F12020DN	2.0	0.5	$116.00	PDF
F12030DN	3.0	0.5	$119.00	PDF
F12040DN	4.0	0.5	$121.00	PDF
F12050DN	5.0	0.6	$123.00	PDF
F12060DN	6.0	0.6	$126.00	PDF
F12080DN	8.0	0.8	$130.00	PDF
F12100DN	10.0	0.8	$135.00	PDF
F12120DN	12.0	0.9	$141.00	PDF

Specifications	
300 series stainless steel cylinder body	0.40 sq. in. piston area
Rod diameter 1/4 in.	Rod thread 1/4-28
300 series stainless steel end caps	Pre-lubricated for maintenance-free life
300 series stainless steel piston rod	Pressure rating 250 psi
Low friction Buna-N seals	Temperature range -20°F to 200°F (-28 to 93°C)
Extend force at 100 psi = 40.0 lb.	Retract force at 100 psi = 35.1 lb.

Mount Style		***Bracket***	***Nut***
Front Nose Mount		FMB-6	FN-58-18
Rear Pivot Mount		–	–
Double End Mount	Front	–	–
	Rear	–	–

Cylinder rod clevis FRC-14-28
See end of F-series section for Accessories

F-Series All Stainless Steel Pneumatic Cylinders - 3/4 inch Bore

3/4 in. Bore, Double-acting, Double End Mount

NITRA pneumatic stainless steel round body, interchangeable, non-repairable cylinder, 3/4 inch bore, 1/8 inch female NPT ports, double acting, double end mount.

All Stainless Steel Cylinder 3/4 in. bore, double acting, double end mount				
Part Number	***Stroke Length (in.)***	***Weight (lbs)***	***Price***	***Drawing Link***
F12005DD	0.5	0.3	$120.00	PDF
F12010DD	1.0	0.3	$138.00	PDF
F12020DD	2.0	0.5	$141.00	PDF
F12030DD	3.0	0.5	$144.00	PDF
F12040DD	4.0	0.5	$146.00	PDF
F12050DD	5.0	0.6	$149.00	PDF
F12060DD	6.0	0.6	$151.00	PDF
F12080DD	8.0	0.8	$156.00	PDF
F12100DD	10.0	0.8	$160.00	PDF
F12120DD	12.0	0.9	$165.00	PDF

Specifications	
300 series stainless steel cylinder body	0.40 sq. in. piston area
Rod diameter 1/4 in.	Rod thread 1/4-28
300 series stainless steel end caps	Pre-lubricated for maintenance-free life
300 series stainless steel piston rod	Pressure rating 250 psi
Low friction Buna-N seals	Temperature range -20°F to 200°F (-28 to 93°C)
Extend force at 100 psi = 40.0 lb.	Retract force at 100 psi = 35.1 lb.

Mount Style		***Bracket***	***Nut***
Front Nose Mount		FMB-6	FN-58-18
Rear Pivot Mount		FPBP-2	–
Double End Mount	Front	FMB-6	FN-58-18
	Rear	FMB-6	FN-58-18

Cylinder rod clevis FRC-14-28

See end of F-series section for Accessories

F-Series All Stainless Steel Pneumatic Cylinder Accessories

F-Series All Stainless Steel Pneumatic Cylinder Accessories				
Part Number	**Description**	**Pcs/Pkg**	**Wt (lb)**	**Price**
FN-58-18	Cylinder mounting nut with 5/8-18 UNF-2B threads, stainless steel, used to mount 3/4 and 1-1/16 inch bore NITRA F-series round body air cylinders	1	0.1	$3.50
FN-34-16	Cylinder mounting nut with 3/4-16 UNF-2B threads, stainless steel, used to mount 1-1/2 inch bore NITRA F-series round body air cylinders	1	0.1	$4.50
FN-114-12	Cylinder mounting nut with 1-1/4-12 UNF-2B threads, stainless steel, used to mount 2 inch bore NITRA F-series round body air cylinders	1	0.3	$11.00
FMB-6	Cylinder mounting bracket, stainless steel, used to mount 3/4 and 1-1/16 inch bore NITRA F-series round body air cylinders	1	0.1	$10.00
FMB-7	Cylinder mounting bracket, stainless steel, used to mount 1-1/2 inch bore NITRA F-series round body air cylinders	1	0.2	$30.50
FMB-11	Cylinder mounting bracket, stainless steel, used to mount 2 inch bore NITRA F-series round body air cylinders	1	0.5	$44.00
FPBP-2	Cylinder pivot mounting bracket with pivot pin, stainless steel, used to mount 3/4 and 1-1/16 inch bore NITRA F-series round body air cylinders	1	0.1	$28.00
FPBP-3	Cylinder pivot mounting bracket with pivot pin, stainless steel, used to mount 1-1/2 inch bore NITRA F-series round body air cylinders	1	0.2	$35.00
FPBP-4	Cylinder pivot mounting bracket with pivot pin, stainless steel, used to mount 2 inch bore NITRA F-series round body air cylinders	1	0.3	$43.00
FRC-14-28	Cylinder rod clevis and hex nut, stainless steel, 1/4-28 thread, for use with 3/4 inch bore NITRA F-series round body air cylinders	1	0.1	$36.00
FRC-516-24	Cylinder rod clevis and hex nut, stainless steel, 5/16-24 thread, for use with 1-1/16 inch bore NITRA F-series round body air cylinders	1	0.1	$40.50
FRC-716-20	Cylinder rod clevis and hex nut, stainless steel, 7/16-20 thread, for use with 1-1/2 inch bore NITRA F-series round body air cylinders	1	0.2	$50.00
FRC-12-20	Cylinder rod clevis and hex nut, stainless steel, 1/2-20 thread, for use with 2 inch bore NITRA F-series round body air cylinders	1	0.2	$59.00

Dimensions

inches [mm]

FN-58-18

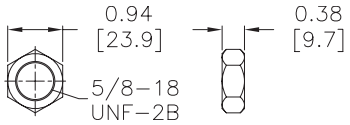

FN-34-16

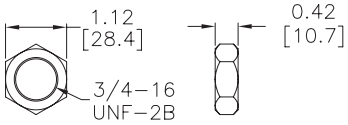

FN-114-12

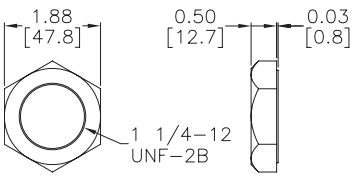

FMB-6

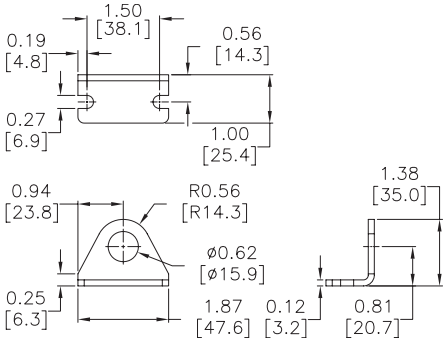

F-Series All Stainless Steel Pneumatic Cylinder Accessories

Dimensions

inches [mm]

FMB-7

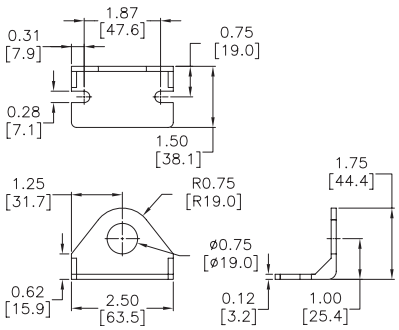

FMB-11

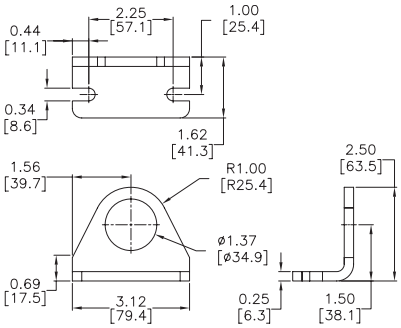

FPBP-2

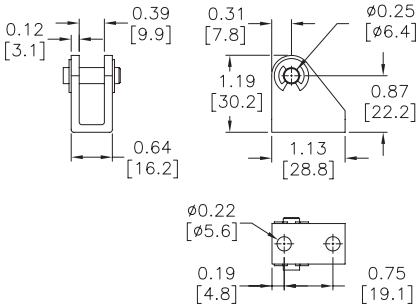

FPBP-3

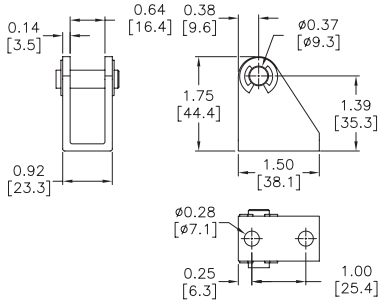

FPBP-4

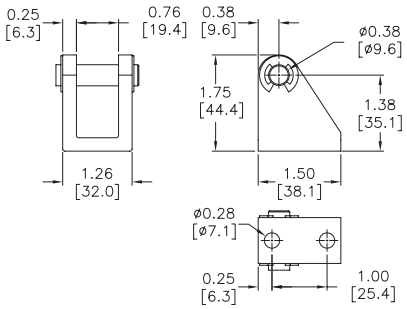

FRC-14-28

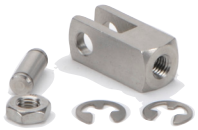

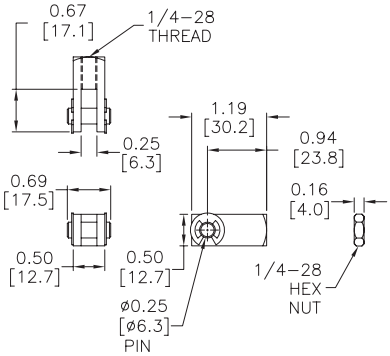

FRC-516-24

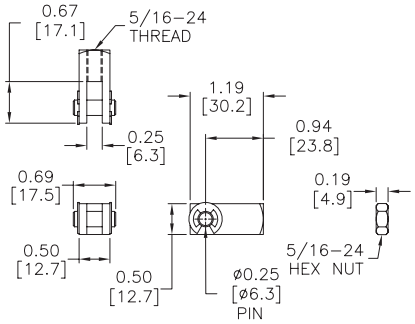

F-Series All Stainless Steel Pneumatic Cylinder Accessories

Dimensions

inches [mm]

FRC-716-20

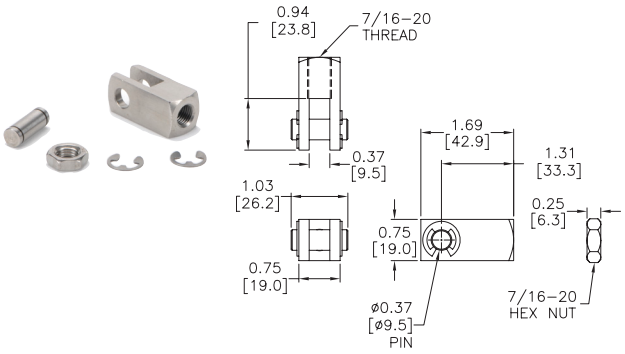

FRC-12-20

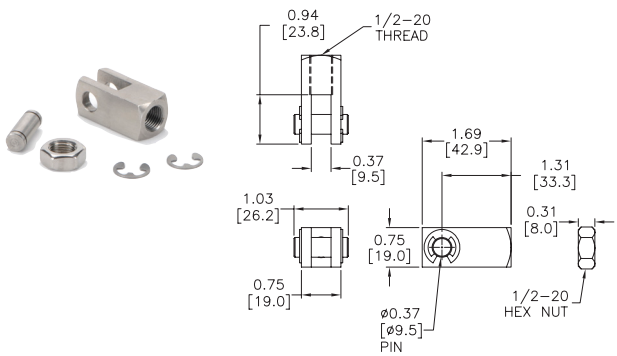

CPS Series Cylinder Position Switches

Position Switch Cross Reference Chart

NITRA Switch Type	Cylinder Brand (may fit some of these cylinders)	Photo Example	Groove Illustration
CPS **CPSF**	NITRA A-Series, D-Series, F-Series		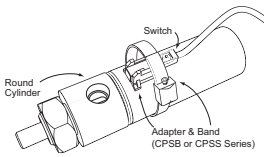 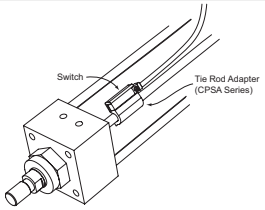
CPS9C	DE-STA-CO Robohand SMC Compact Air		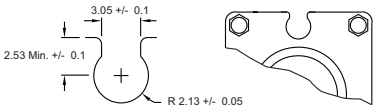
CPS9D	Fabco Numatics Rotomation		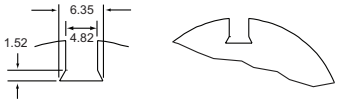
CPS9F	NITRA G-Series Fabco Festo Numatics Rotomation	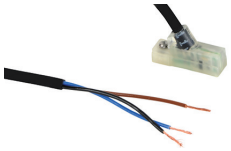	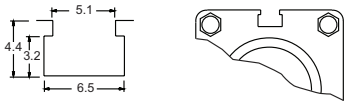
CPS9H	NITRA E-Series NITRA H-Series		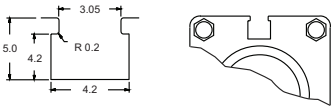
CPS9M	Norgren		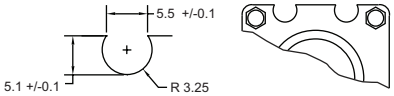
CPS9Q	NITRA G-Series Parker		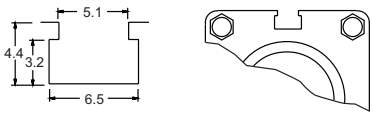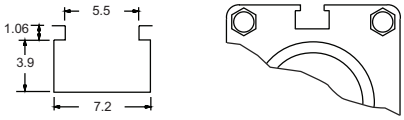
CPS9T	SMC