Pneumatic Push-to-Connect Flow Control (Speed Controller) Valves

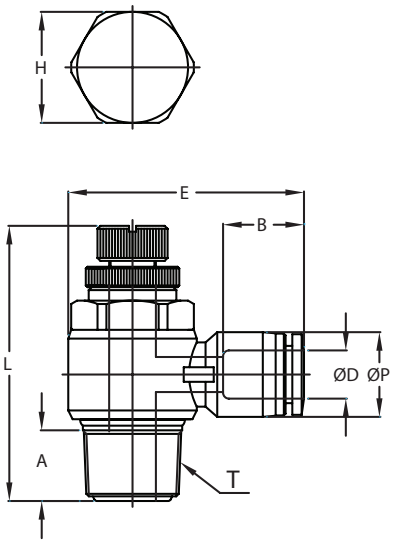

NITRA pneumatic push-to-connect **meter-out** flow control valve (speed controller) elbow with rotating thermoplastic (PBT) body, nickel-plated brass threads, stainless steel tube griping claws, and pre-applied Teflon thread sealant (#10-32, M5 and G threads have
O-ring instead of thread sealant). For use with polyurethane or nylon tubing. Two fittings per package.

Inch Fitting

R-Thread (BSPT) Flow Control Valve

G-Thread (BSPP) Flow Control Valve

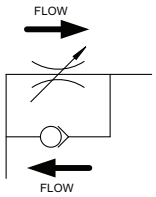

NITRA Elbow Flow Control Valve Meter-Out													
Inch Sizes - dimensions in inches (in.)													
Part No.	*Price*	*Size*	*øD*	*øP*	*T*	*L*		*E*	*A*	*B*	*H (Hex)*	*Package Weight (lbs)*	*Qty. per pack*
						Min.	*Max.*						
FVS18-10N	$16.00	1/8 in. x #10-32	1/8	0.30	UNF 10-32	1.06	1.15	0.85	0.14	0.44	5/16	0.1	2
FVS532-10N	$12.00	5/32 in. (4 mm) x #10-32	5/32	0.41	UNF 10-32	1.06	1.15	1.04	0.14	0.59	5/16	0.1	2
FVS532-18N	$16.00	5/32 in. (4 mm) x 1/8 NPT	5/32	0.41	NPT 1/8	1.37	1.57	1.21	0.32	0.59	7/16	0.1	2
FVS14-10N	$15.00	1/4 in. x #10-32	1/4	0.51	UNF 10-32	1.06	1.15	1.13	0.14	0.66	5/16	0.1	2
FVS14-18N	$18.00	1/4 in. x 1/8 NPT	1/4	0.51	NPT 1/8	1.37	1.57	1.26	0.32	0.66	7/16	0.2	2
FVS14-14N	$19.50	1/4 in. x 1/4 NPT	1/4	0.51	NPT 1/4	1.60	1.85	1.41	0.43	0.66	19/32	0.2	2
FVS516-18N	$21.00	5/16 in. (8 mm) x 1/8 NPT	5/16	0.57	NPT 1/8	1.37	1.56	1.31	0.32	0.72	7/16	0.1	2
FVS516-14N	$21.00	5/16 in. (8 mm) x 1/4 NPT	5/16	0.57	NPT 1/4	1.59	1.85	1.47	0.43	0.72	19/32	0.2	2
FVS516-38N	$23.50	5/16 in. (8 mm) x 3/8 NPT	5/16	0.57	NPT 3/8	1.88	2.16	1.59	0.52	0.72	3/4	0.3	2
FVS38-14N	$22.50	3/8 in. x 1/4 NPT	3/8	0.69	NPT 1/4	1.60	1.85	1.57	0.43	0.79	19/32	0.2	2
FVS38-38N	$23.50	3/8 in. x 3/8 NPT	3/8	0.69	NPT 3/8	1.89	2.16	1.65	0.52	0.79	3/4	0.4	2
FVS38-12N	$34.50	3/8 in. x 1/2 NPT	3/8	0.69	NPT 1/2	2.12	2.41	1.86	0.65	0.79	15/16	0.4	2
FVS12-38N	$34.50	1/2 in. x 3/8 NPT	1/2	0.82	NPT 3/8	1.89	2.16	1.78	0.52	0.90	3/4	0.4	2
FVS12-12N	$35.50	1/2 in. x 1/2 NPT	1/2	0.82	NPT 1/2	2.12	2.41	1.99	0.65	0.90	15/16	0.4	2

BSPT = British Standard Pipe Taper
BSPP = British Standard Pipe Parallel

Pneumatic Push-to-Connect Flow Control (Speed Controller) Valves

NITRA Elbow Flow Control Valve Meter-Out													
R-Thread (BSPT) Metric Sizes - dimensions in millimeters (mm)													
Part No.	*Price*	*Size*	*øD*	*øP*	*T*	*L*		*E*	*A*	*B*	*H (Hex)*	*Package Weight (lbs)*	*Qty. per pack*
						Min.	*Max.*						
FVS4M-M5	$13.00	4 mm (5/32 in.) x M5	4	10.5	M5*0.8p	27.1	29.1	25.4	3.6	14.9	8	0.2	2
FVS4M-18R	$16.00	4 mm (5/32 in.) x R1/8	4	10.5	R 1/8	35.5	40.7	30.5	8.2	14.9	11	0.2	2
FVS6M-M5	$16.00	6 mm x M5	6	12.5	M5*0.8p	27.1	29.1	27.8	3.6	16.4	8	0.2	2
FVS6M-18R	$16.50	6 mm x R1/8	6	12.5	R 1/8	35.5	40.7	31.3	8.2	16.4	11	0.2	2
FVS6M-14R	$19.00	6 mm x R1/4	6	12.5	R 1/4	40.3	46.6	35.3	11.0	16.4	15	0.2	2
FVS8M-14R	$21.00	8 mm (5/16 in.) x R1/4	8	14.5	R 1/4	40.3	46.6	37.4	11.0	18.7	15	0.3	2
FVS8M-38R	$24.00	8 mm (5/16 in.) x R3/8	8	14.5	R 3/8	46.9	54.9	40.4	12.2	18.7	19	0.3	2
FVS10M-14R	$26.50	10 mm x R1/4	10	17.5	R 1/4	40.3	46.6	38.8	11.0	20.1	15	0.4	2
FVS10M-38R	$27.00	10 mm x R3/8	10	17.5	R 3/8	46.9	54.9	42.1	12.2	20.1	19	0.4	2
FVS10M-12R	$30.50	10 mm x R1/2	10	17.5	R 1/2	54.0	60.1	47.3	16.5	20.1	24	0.4	2
FVS12M-38R	$31.00	12 mm x R3/8	12	20.5	R 3/8	46.9	54.9	45.2	12.2	22.8	19	0.4	2
FVS12M-12R	$31.00	12 mm x R1/2	12	20.5	R 1/2	54.0	60.1	50.1	16.5	22.8	24	0.4	2
G-Thread (BSPP) Metric Sizes - dimensions in millimeters (mm)													
FVS4M-18G	$16.00	4 mm (5/32 in.) x G1/8	4	10.5	G 1/8	34.6	39.8	30.3	6.0	15.3	8	0.2	2
FVS6M-18G	$16.50	6 mm x G1/8	6	12.5	G 1/8	34.6	39.8	31.2	6.0	16.4	8	0.2	2
FVS6M-14G	$19.00	6 mm x G1/4	6	12.5	G 1/4	39.8	46.1	35.2	8.0	16.4	12	0.3	2
FVS6M-38G	$22.00	6 mm x G3/8	6	12.5	G 3/8	47.7	54.9	38.7	8.0	16.4	14	0.4	2
FVS8M-14G	$21.00	8 mm (5/16 in.) x G1/4	8	14.5	G 1/4	39.8	46.1	36.9	8.0	18.3	12	0.2	2
FVS8M-38G	$24.00	8 mm (5/16 in.) x G3/8	8	14.5	G 3/8	47.7	54.9	39.9	8.0	18.3	14	0.3	2
FVS8M-12G	$33.50	8 mm (5/16 in.) x G1/2	8	14.5	G 1/2	54.5	61.7	45.8	9.0	18.3	17	0.4	2
FVS10M-38G	$27.00	10 mm x G3/8	10	17.5	G 3/8	47.7	54.9	42.2	8.0	19.7	14	0.4	2
FVS10M-12G	$30.50	10 mm x G1/2	10	17.5	G 1/2	54.5	61.7	48.4	9.0	19.7	17	0.5	2

BSPT = British Standard Pipe Taper
BSPP = British Standard Pipe Parallel

Pneumatic Push-to-Connect Flow Control (Speed Controller) Valves

Flowrate Charts

FVR18-10N
FVR4M-M5
FVR532-10N
FVR6M-M5
FVR14-10N
FVS18-10N
FVS4M-M5
FVS6M-M5
FVS14-10N
FVS532-10N

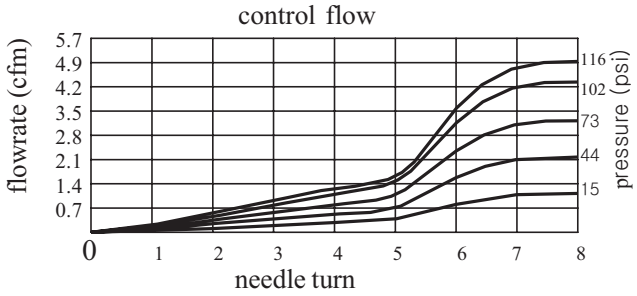

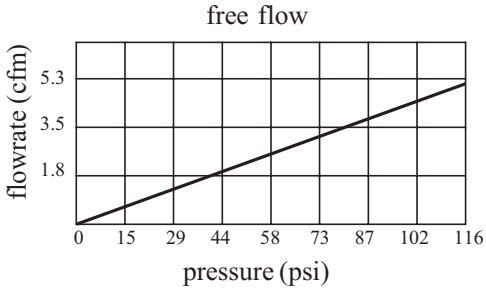

FVR4M-18R
FVR532-18N
FVR6M-18R
FVR14-18N
FVR516-18N
FVS4M-18R
FVS6M-18R
FVS14-18N
FVS516-18N

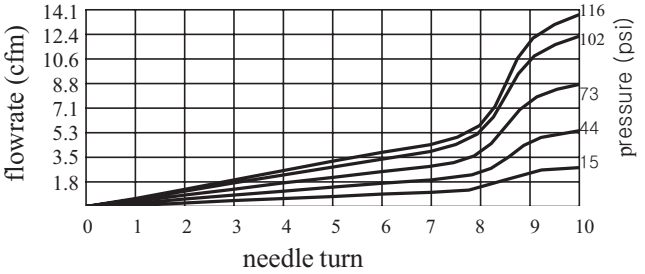

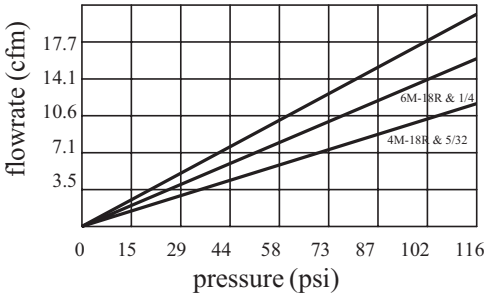

FVR6M-14R
FVR14-14N
FVR8M-14R
FVR516-14N
FVR10M-14R
FVR38-14N
FVS6M-14R
FVS14-14N
FVS8M-14R
FVS516-14N
FVS10M-14R
FVS38-14N

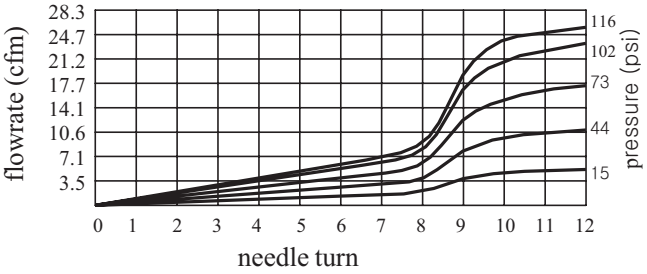

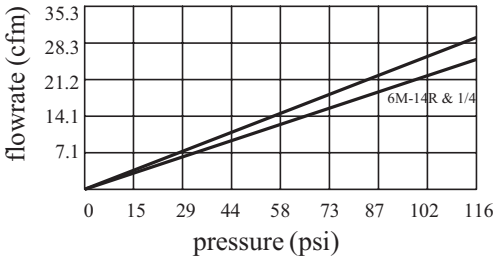

FVR8M-38R
FVR516-38N
FVR10M-38R
FVR38-38N
FVR12M-38R
FVR12-38N
FVS8M-38R
FVS516-38N
FVS10M-38R
FVS38-38N
FVS12M-38R
FVS12-38N

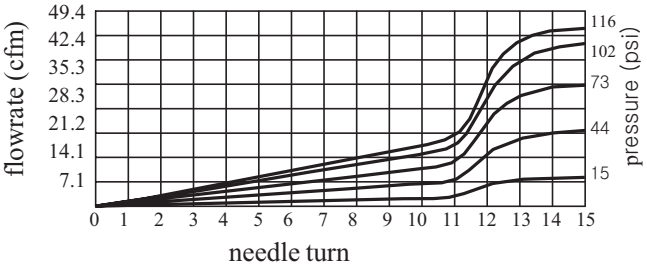

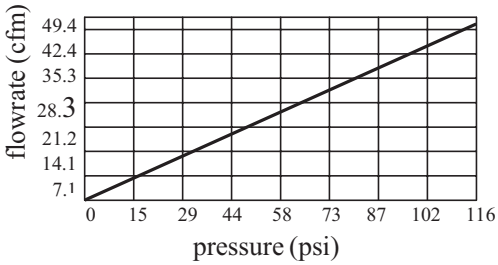

FVR10M-12R
FVR38-12N
FVR12M-12R
FVR12-12N
FVS10M-12R
FVS38-12N
FVS12-12N
FVS12M-12R

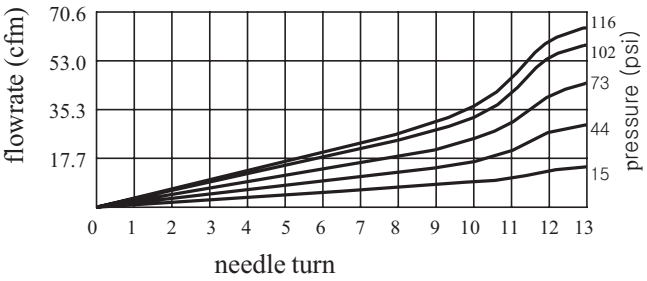

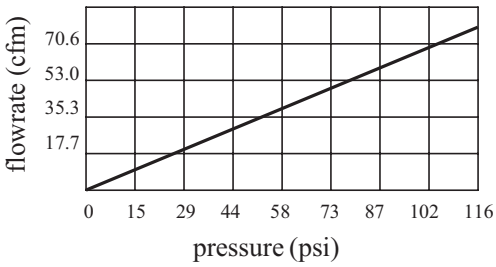

Pneumatic Push-to-Connect Flow Control (Speed Controller) Valves

NITRA Pneumatic Push-to-Connect Flow Control (Speed Controller) Valves provide accurate airflow regulation for precise speed control of pneumatic cylinders. **NITRA** flow control valve bodies are made of a strong thermoplastic (PBT) and have stainless steel tube gripping claws. Threaded
components are made of nickel-plated brass and have pre-applied Teflon thread sealant (O-ring on #10-32, M5 and G threads). Flow control valve bodies can be rotated after installation to allow for variations in piping direction. **NITRA** Polyurethane and Nylon 12 tubing is easily connected by simply inserting the tubing end into the fitting. To release the tubing, press the circular release ring and the tubing can be easily pulled out.

Features

- Meter-in , meter-out and in-line configurations
- Inch and metric sizes available
- NPT, BSPT (R) and BSPP (G) threads available
- Tough thermoplastic bodies, stainless steel tube gripping claws, nickel-plated threads with pre-applied Teflon sealant (O-ring on #10-32, M5 and G threads)
- Bodies can be rotated after installation
- Release rings are color coded to differentiate between meter-in and meter-out
- For use with air only.
- Working pressure: -29.5" Hg to 150 psi.
- Working Temperature 32 to 140°F (0 to 60°C)

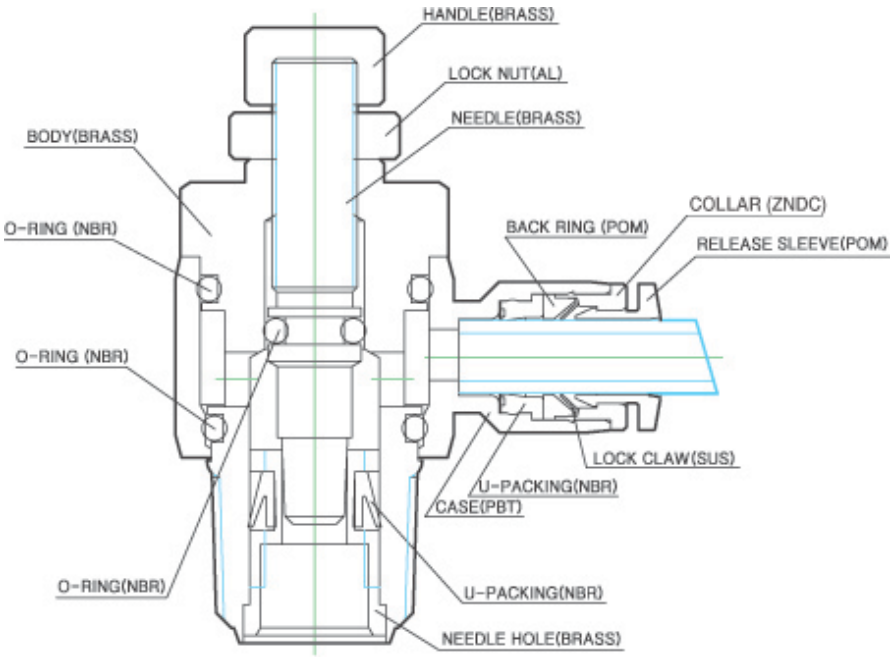

Flow Control Valve Cut-away Diagram