Eclipse Series NEMA 3R, 4, and 12 Single-Door Wall-Mount Slope Top

HAMMOND MANUFACTURING®

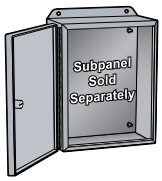

Applications

- Designed to enclose electrical and/or electronic equipment and protect against harsh, industrial environments for wall-mount applications.
- Sloped top prevents water from resting on top as well as providing potential for controls mounting.
- Impressive styling features like hidden hinges and attractive latching systems make the Eclipse a suitable addition to any high-tech equipment installation.
- A wide range of sizes and practical accessories make this product line a complete package.

Construction

- Formed 14-gauge (24 x 24 in [610 x 610 mm] and larger) or 16-gauge (24 x 20 in [610 x 508 mm] and smaller) steel.
- Continuously welded seams ground smooth.
- Door stiffeners are provided where required for increased strength and rigidity - designed to also permit additional mounting options.
- Formed lip on enclosure to exclude flowing liquids and contaminants.
- Seamless poured-in-place gasket.
- Collar studs provided for mounting subpanel.
- Door latching: Type A has slotted 1/4 turns, Type B has handle with 3-point latching Doors may be easily removed for modifications and are interchangeable.
- Includes hardware kit with panel mounting nuts and sealing washers for wall-mounting holes.
- Bonding stud provided on door and grounding stud installed in enclosure.
- Hinges are mild steel.
- Stainless steel hinge pins and 1/4- turn latches.

Finish

- Cover and enclosure are finished in recoatable RAL7035 light gray textured powder coating.

Listings

- UL 508A Type 3R, 4, and 12 [UL File 65324]
- CSA Type 3R, 4, and 12 [CSA File LR21001]
- Complies with
  - NEMA Type 3R, 4, and 12
  - IEC 60529, IP66

Eclipse Series NEMA 3R, 4, and 12 Single-Door Wall-Mount Slope Top

Part Number	Price	Enclosure Size HxWxD	Latch Type	Optional Subpanels			Drawing Link
				Painted	Galvanized	Size HxW	
ST12126LG	$329.00	14.18 x 12.00 x 6.82 [360 x 305 x 173]	A	EP1212	EPG1212	10.17 x 10.17 [258 x 258]	PDF
ST16126LG	$353.00	18.18 x 12.00 x 6.82 [462 x 305 x 173]		EP1612	EPG1612	14.17 x 10.17 [360 x 258]	PDF
ST16168LG	$398.00	18.91 x 16.00 x 8.82 [480 x 406 x 224]		EP1616	EPG1616	14.17 x 14.17 [360 x 360]	PDF
ST20166LG	$405.00	22.18 x 16.00 x 6.82 [563 x 406 x 173]		EP2016	EPG2016	18.17 x 14.17 [462 x 360]	PDF
ST20168LG	$427.00	22.91 x 16.00 x 8.82 [582 x 406 x 224]		EP2016	EPG2016	18.17 x 14.17 [462 x 360]	PDF
ST20206LG	$439.00	22.16 x 20.00 x 6.82 [563 x 508 x 173]		EP2020	EPG2020	18.17 x 18.17 [462 x 462]	PDF
ST20208LG	$462.00	22.91 x 20.00 x 8.82 [582 x 508 x 224]		EP2020	EPG2020	18.17 x 18.17 [462 x 462]	PDF
ST24208LG	$496.00	26.91 x 20.00 x 8.82 [684 x 508 x 224]		EP2420	EPG2420	22.17 x 18.17 [563 x 462]	PDF
ST24248LG	$536.00	26.93 x 24.00 x 8.84 [684 x 610 x 225]		EP2424	EPG2424	22.17 x 22.17 [563 x 563]	PDF
ST242410LG	$550.00	27.63 x 24.00 x 10.84 [702 x 610 x 275]		EP2424	EPG2424	22.17 x 22.17 [563 x 563]	PDF
ST242412LG	$596.00	28.38 x 24.00 x 12.84 [721 x 610 x 326]		EP2424	EPG2424	22.17 x 22.17 [563 x 563]	PDF
ST30248LG	$597.00	32.92 x 24.00 x 8.84 [836 x 610 x 225]		EP3024	EPG3024	28.17 x 22.17 [716 x 563]	PDF
ST302410LG	$611.00	33.65 x 24.00 x 10.84 [855 x 610 x 275]		EP3024	EPG3024	28.17 x 22.17 [716 x 563]	PDF
ST302412LG	$659.00	34.36 x 24.00 x 12.84 [873 x 610 x 326]		EP3024	EPG3024	28.17 x 22.17 [716 x 563]	PDF
ST302420LG	$819.00	37.29 x 24.00 x 20.84 [947 x 610 x 529]		EP3024	EPG3024	28.17 x 22.17 [716 x 563]	PDF
ST30308LG	$667.00	32.92 x 30.00 x 8.84 [836 x 762 x 225]		EP3030	EPG3030	28.17 x 28.17 [716 x 716]	PDF
ST36308LG	$739.00	38.92 x 30.00 x 8.84 [989 x 762 x 225]		EP3630	EPG3630	34.17 x 28.17 [868 x 716]	PDF
ST363010LG	$755.00	39.65 x 30.00 x 10.84 [1007 x 762 x 275]		EP3630	EPG3630	34.17 x 28.17 [868 x 716]	PDF
ST363012LG	$815.00	40.37 x 30.00 x 12.84 [1025 x 762 x 326]		EP3630	EPG3630	34.17 x 28.17 [868 x 716]	PDF
ST363016LG	$927.00	41.83 x 30.00 x 16.84 [1062 x 762 x 428]		EP3630	EPG3630	34.17 x 28.17 [868 x 716]	PDF
ST363612LG	$906.00	40.37 x 36.00 x 12.84 [1025 x 914 x 326]		EP3636	EPG3636	34.17 x 34.17 [868 x 868]	PDF
ST483610LG	$1,042.00	51.65 x 36.00 x 10.84 [1312 x 914 x 275]	B	EP4836	EPG4836	46.17 x 34.17 [1173 x 868]	PDF
ST483612LG	$1,087.00	52.38 x 36.00 x 12.84 [1330 x 914 x 326]		EP4836	EPG4836	46.17 x 34.17 [1173 x 868]	PDF
ST483616LG	$1,193.00	53.84 x 36.00 x 16.84 [1368 x 914 x 428]		EP4836	EPG4836	46.17 x 34.17 [1173 x 868]	PDF
ST603612LG	$1,268.00	64.35 x 36.00 x 12.84 [1634 x 914 x 326]		EP6036	EPG6036	58.17 x 34.17 [1478 x 868]	PDF

Note: Dimensions in inches [millimeters].

Eclipse Series NEMA 3R, 4, and 12 Single-Door Wall-Mount Slope Top
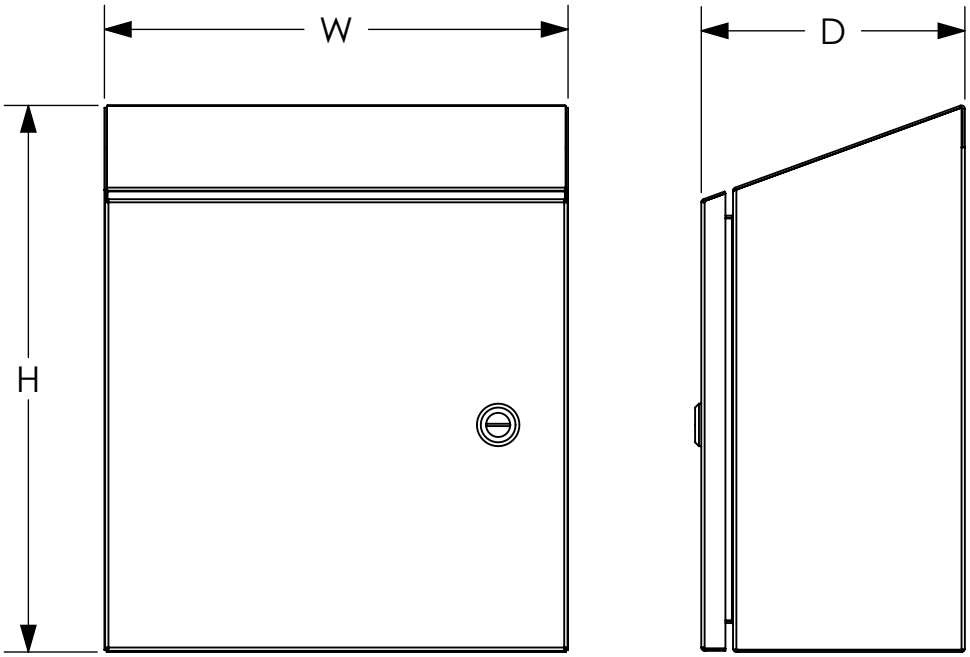
Dimensions