GEFRAN
BEYOND TECHNOLOGY

PZ12 Series Linear Potentiometers With Cylindrical Case

Features

- Half-inch-diameter cylindrical housing
- Multiple mounting options (brackets, rod eyes or flange) enhance versatility for a wide range of applications
- Designed for easy installation thanks to an absence of electrical signal variation in output
- Ideal for applications such as wood and glass working, finishing machinery, and car test benches
- All potentiometers are individually tested at the manufacturer, and an individualized Linearity Error Chart is included with each unit

PZ12 Series Linear Potentiometers Selection Chart

Part Number	Price	Drawing Link	Useful Electrical Stroke (CEU) mm [in]	Theoretical Electrical Stroke (CET) mm [in]	Resistance (CET)	Mechanical Stroke (CM) mm [in]	Case Length (A) mm [in]	Recommended Distance Between Brackets (B) mm [in]	Minimum Distance Between Rod Eyes (C) mm [in]
PZ12-F-xxxx-L Flange Mount Models									
PZ12-F-0025-L	$157.00	PDF	25 [0.98]	26 [1.02]	1KΩ	30 [1.18]	74.5 [2.93]	–	–
PZ12-F-0050-L	$166.00	PDF	50 [1.97]	51 [2.01]	2KΩ	55 [2.17]	99.5 [3.92]	–	–
PZ12-F-0075-L	$171.00	PDF	75 [2.95]	76 [2.99]	3KΩ	80 [3.15]	124.5 [4.90]	–	–
PZ12-F-0100-L	$177.00	PDF	100 [3.94]	101 [3.98]	4KΩ	105 [4.13]	149.5 [5.89]	–	–
PZ12-F-0200-L	$191.00	PDF	200 [7.87]	201 [7.91]	8KΩ	205 [8.07]	249.5 [9.82]	–	–
PZ12-A-xxxx-L Rod Eyes Mount Models									
PZ12-A-0025-L	$215.00	PDF	25 [0.98]	26 [1.02]	1KΩ	30 [1.18]	102 [4.02]	–	153 [6.02]
PZ12-A-0050-L	$279.00	PDF	50 [1.97]	51 [2.01]	2KΩ	55 [2.17]	127 [5.00]	–	178 [7.01]
PZ12-A-0075-L	$285.00	PDF	75 [2.95]	76 [2.99]	3KΩ	80 [3.15]	152 [5.98]	–	203 [7.99]
PZ12-A-0100-L	$290.00	PDF	100 [3.94]	101 [3.98]	4KΩ	105 [4.13]	177 [6.97]	–	228 [8.98]
PZ12-A-0200-L	$304.00	PDF	200 [7.87]	201 [7.91]	8KΩ	205 [8.07]	277 [10.91]	–	328 [12.91]
PZ12-S-xxxx-L Clamp Brackets Mount Models									
PZ12-S-0025-L	$166.00	PDF	25 [0.98]	26 [1.02]	1KΩ	30 [1.18]	74.5 [2.93]	42 [1.65]	–
PZ12-S-0050-L	$183.00	PDF	50 [1.97]	51 [2.01]	2KΩ	55 [2.17]	99.5 [3.92]	67 [2.64]	–
PZ12-S-0075-L	$188.00	PDF	75 [2.95]	76 [2.99]	3KΩ	80 [3.15]	124.5 [4.90]	92 [3.62]	–
PZ12-S-0100-L	$193.00	PDF	100 [3.94]	101 [3.98]	4KΩ	105 [4.13]	149.5 [5.89]	117 [4.61]	–
PZ12-S-0200-L	$209.00	PDF	200 [7.87]	201 [7.91]	8KΩ	205 [8.07]	249.5 [9.82]	217 [8.54]	–

GEFRAN
BEYOND TECHNOLOGY

PZ12 Series Linear Potentiometers With Cylindrical Case

PZ12 Series Linear Potentiometers Specifications					
Model PZ12-x-xxxx-L	***0025***	***0050***	***0075***	***0100***	***0200***
Independent Linearity (Within CEU)	± 0.2%	± 0.1%	± 0.1%	± 0.1%	± 0.05%
Resolution	Infinite				
Repeatability	–				
Electrical Connections	PVC, 1m [3.28 ft] 3-wire axial cable, 24AWG (0.25 mm^2)				
Displacement Speed	Standard ≤ 10 m/s [32.81 ft/s]				
Protection Level	IP60				
Life	> 25x106 strokes or > 100x106 maneuvers, whichever is less (within CEU)				
Displacement Force	≤ 0.5 N				
Vibrations	5-2000 Hz: Amax=0.75 mm [0.03 in], amax=20g				
Shock	50g, 11ms				
Acceleration	–				
Tolerance on Resistance	±20%				
Recommended Cursor Current	< 0.1 µA				
Maximum Cursor Current	10mA				
Maximum Applicable Voltage	20V	40V	60V	60V	60V
Electrical Isolation	>100MΩ at 500V=, 1bar, 2s				
Dielectric Strength	< 100µA at 500V~, 50Hz, 2s, 1bar				
Dissipation at 40 °C [104 °F] (0W at 120 °C [248 °F])	0.5 W	1W	1.5 W	2W	3W
Thermal Coefficient of Resistance	-200 to +200 ppm/°C				
Actual Temperature Coefficient of Output Voltage	≤ 1.5 ppm/°C				
Working Temperature	-30 to +100°C [-22 to +212°F]				
Storage Temperature	-50 to +120°C [-58 to 248°F]				
Case Material	Anodized aluminum, Nylon 66				
Shaft Material	Stainless steel AISI 303				
Mounting	Brackets, self-aligning rod eyes, or flange				

GEFRAN BEYOND TECHNOLOGY

PZ12 Series Linear Potentiometers With Cylindrical Case

Electrical Connections

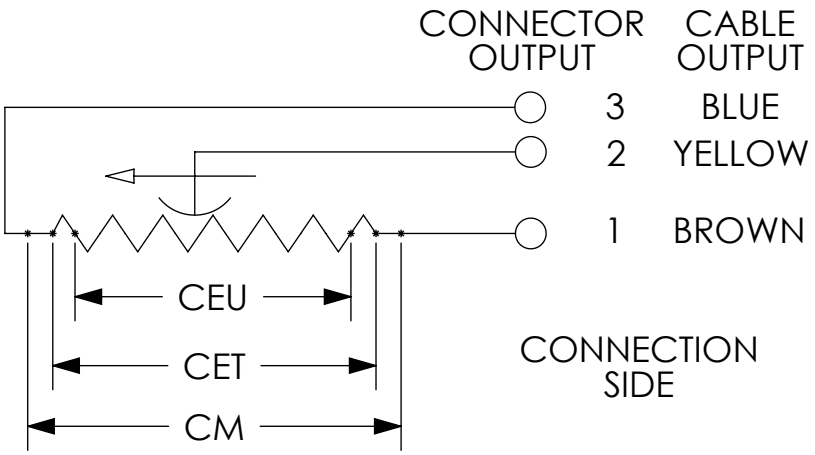

When choosing a transducer, it is important to remember that three different strokes exist:

- Mechanical Stroke (CM): The actual shift that the transducer's cursor (wiper) is able to make.
- Useful Electrical Stroke (CEU): The part of the mechanical stroke in which transducer linearity is guaranteed.
- Theoretical Electrical Stroke (CET): Stroke expressed in mm or angular degrees between the electrical zero (Vout=0) and the electrical limit switch (Vout=Vs), which physically is equal to the distance between the silver pitches at the ends of the resistive track.

Therefore, when designing an application, you should choose a transducer with a useful electrical stroke that is equal to or greater than the maximum displacement carried out by the moving part.

GEFRAN BEYOND TECHNOLOGY

Linear Potentiometer Accessories

Connectors For Gefran Linear Potentiometers				
Part Number	***Price***	***Drawing Link***	***Description***	***Number of Poles***
CON006-1KJ	$8.00	PDF	Gefran field wireable connector, 18mm DIN 43650 Form A, 90-degree cable entry, 4-pole. For use with Gefran LT, PK and WPG linear position sensors.	4
CON008-1KJ	$8.00	PDF	Gefran field wireable connector, 9.4mm DIN 43650 Form C, 90-degree cable entry, 4-pole. For use with Gefran PC series potentiometers.	4

CON006-1KJ

CON008-1KJ

Mounting Brackets and Accessories For Gefran Linear Potentiometers		
Part Number	***Price***	***Description***
PKIT009-1KJ	$12.00	Gefran mounting brackets, for use with Gefran LT Series potentiometers
PKIT015-1KJ	$21.50	Gefran rod eye joint accessory, for use with Gefran LT Series potentiometers
PKIT059-1KJ	$12.00	Gefran mounting brackets, for use with 100 to 900mm Gefran PK Series potentiometers
PKIT061-1KJ	$13.50	Gefran mounting brackets, for use with 1000 to 2000mm Gefran PK Series potentiometers
STA074-1KJ	$5.50	Gefran mounting brackets, for use with Gefran PZ12-S Series potentiometers

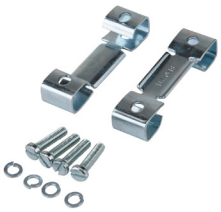

PKIT009-1KJ

PKIT015-1KJ

PKIT059-1KJ

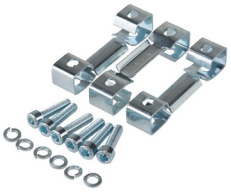

PKIT061-1KJ

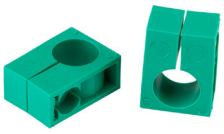

STA074-1KJ