Enclosure Cooling

You need to cool down

Heat inside an enclosure can decrease the life expectancy of controlling units such as your PLC, HMI, AC drives and other items. Excessive heat can cause nuisance faults from your electrical and electronic components: for example, overloads tripping unexpectedly. Heat will also change the expected performance of circuit breakers and fuses, which can cause whole systems to shut down unexpectedly. So, if you have any electronic equipment or other heat sensitive devices, you may need cooling.

What causes all that heat?

There are basically two sources that can cause the enclosure's internal temperature to rise above the ratings of the control equipment.

Internal Sources

The same items that can be damaged by heat may also be the source of the heat. These include items such as:

- Power supplies Servos
- AC Drives/inverters Soft starters
- Transformers PLC systems
- Communication products HMI systems
- Battery back-up systems

External Sources

Other sources of heat that can cause the internal temperature of your enclosure to rise above a desired level involve the external environment. These include items such as:

- Industrial ovens
- Solar heat gain
- Foundry equipment
- Blast furnaces

Get the heat out

How do you get the heat out of your enclosure and away from those critical components? There are several basic cooling methods available, depending on the cooling requirements and the enclosure environment.

Radiation and Natural Convection Cooling

If the ambient temperature outside the enclosure is cooler than the inside of the enclosure, some heat will be radiated into the atmosphere from the surface of the enclosure. In environments where dust and water intrusion is not a concern, louvers can be added to allow outside air to flow through the enclosure via natural convection - the movement of air due to it's expansion (reduced density) when it's heated and contraction (increased density) when it cools.

On a large scale, natural convection can be a powerful force - it's one of the primary drivers of our weather. But on the scale of an electrical enclosure, its cooling capacity is very limited. For larger heat loads, a more powerful cooling system may be needed.

Since they create openings in the enclosure, louvers are typically limited to NEMA 1 and/or NEMA 3R applications. However, some louvers have optional filters that can be added to maintain NEMA 12 protection.

Forced Convection Cooling

The next step up from natural convection is forced convection cooling. The basic cooling mechanism is the same: cooler air from outside the enclosure passes through the enclosure to remove the heat. The difference is that the air is mechanically forced through the enclosure by a filter fan. The fan produces higher air flow rates than natural convection, which in turn increases the amount of heat removed.

As with natural convection cooling, the ambient air temperature must be lower than the desired enclosure temperature for forced convection to be effective.

A typical forced convection system consists of a fan and a grille, with a filter on the intake device and either a filter or louvers on the exhaust device. The filters and louvers allow the enclosure to maintain NEMA 12 protection. In NEMA 4 or NEMA 4X environments, hoods can be added to both the fan and the grille to prevent the ingress of water.

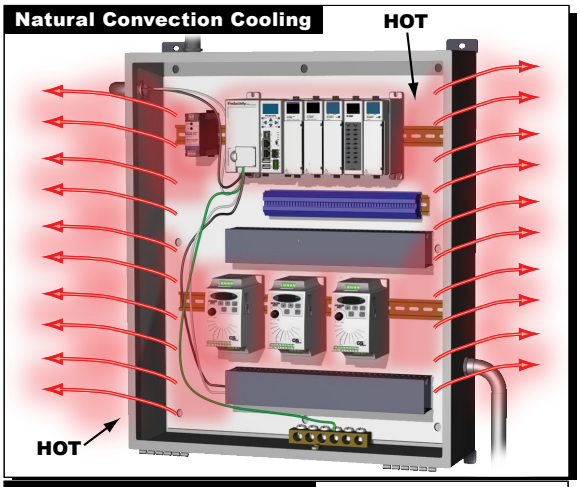

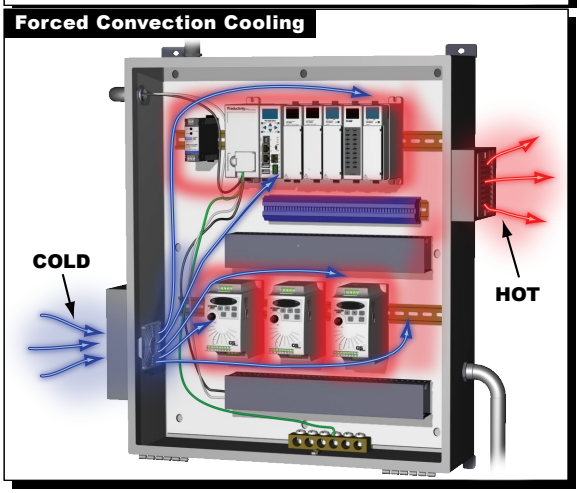

Enclosure Cooling

Closed Loop Cooling

If the environment is harsh, with heavy dust and debris or the presence of airborne chemicals, or there are wash-down requirements, the cooling system must be able to keep the ambient air separate from the air inside the enclosure.

Closed loop systems, which include heat exchangers and air conditioners, circulate the internal air and ambient air through separate chambers connected by a refrigeration system that transfers heat from the internal air stream to the external air stream. Heat exchangers and air conditioners are both closed loop cooling systems. The primary difference in the two is the refrigeration system.

The refrigeration system in a heat exchanger is a set of sealed tubes of alcohol. Heat absorbed from the internal enclosure air boils the liquid alcohol at the bottom of the tube, causing it to rise to the top. The heat is then rejected to the cooler ambient air stream, causing the alcohol to condense back to a liquid and fall to the bottom.

Heat exchangers are very efficient because the refrigeration system has no moving parts - the only moving parts are the two fans. But for the heat to transfer through the system, the ambient air must be colder than the air inside the enclosure, just as it must be for filter fans.

Enclosure air conditioners function in the same manner as a residential or automotive air conditioner, with refrigeration loop powered by a compressor. The refrigerant absorbs heat from the internal air at the evaporator coil and rejects it to the ambient air at the condenser coil. Unlike heat exchangers, they can provide cooling even if the ambient temperature is higher than the enclosure temperature. They can also be scaled to handle larger heat loads than any other cooling system.

Enclosure air conditioners are available for NEMA 12, NEMA 4 and NEMA 4X applications.

Air Conditioners & Heat Exchangers

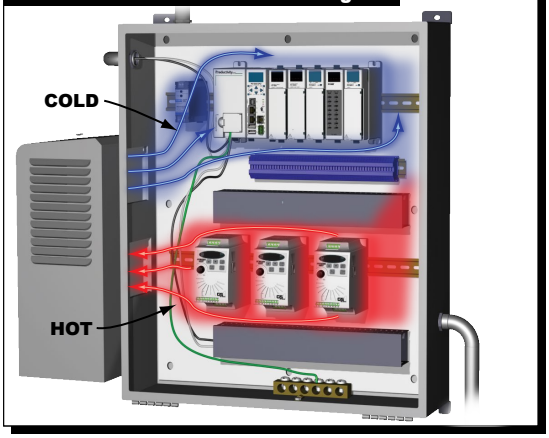

Vortex Coolers

Vortex coolers create a stream of extremely cold air from a supply of filtered compressed air. The cold air is injected into the enclosure, displacing warm air which is exhausted back through the vortex cooler. While not a closed-loop system, they can be used in the same harsh environments since the cold air injected into the enclosure is filtered air from a compressed air system, not ambient air. Vortex coolers can also be used where the ambient temperature is higher than the enclosure temperature.

Since vortex coolers prevent the ingress of ambient air or sprayed water and are made from corrosion-resistant materials, they can be used on NEMA 4X enclosures in harsh, wash-down, and/or corrosive environments.

Vortex coolers are commonly used in lieu of a small or medium enclosure air conditioner in applications where there isn't adequate space to mount an air conditioner, provided there is an adequate supply of compressed air.

Vortex Cooling

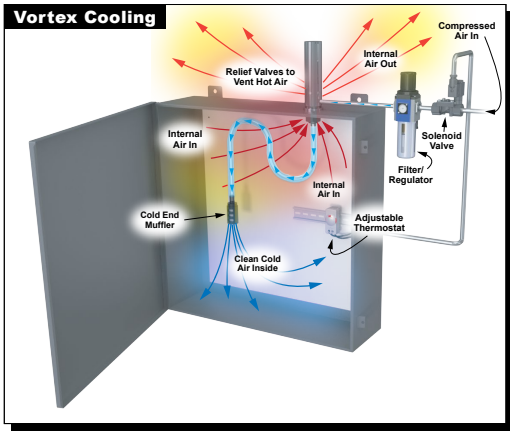

Thermoelectric Coolers

Another alternative to a conventional air conditioner is a thermoelectric cooler, which is sometimes referred to as a Peltier cooler. They function in a manner similar to an air conditioner or heat exchanger, with fans inside and outside the enclosure, but with a thermoelectric unit replacing the fluid-based refrigeration system.

The thermoelectric units consist of an array of semiconductors sandwiched between two ceramic plates. When a DC current is applied to the semiconductor array, heat is driven from one plate to the other, creating a cold side and a warm side. This is known as the Peltier Effect. Fans circulate air across each of the plates, allowing the cold plate to absorb heat from the enclosure and the warm plate to reject it to the ambient air.

Like vortex coolers, thermoelectric coolers can be used with NEMA 4X enclosures in harsh, wash-down, and corrosive environments, and where the ambient temperature exceeds the enclosure temperature.

Thermoelectric coolers are an alternative to air conditioners in small cooling capacity applications where there isn't adequate space for an air conditioner.

Thermoelectric Cooling

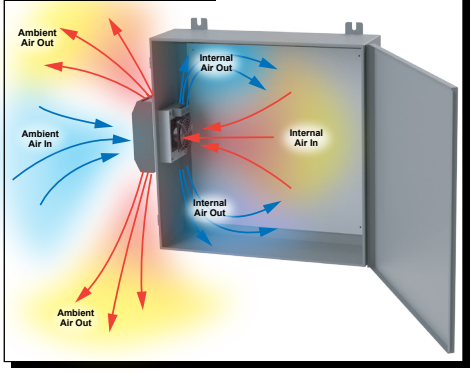

Selecting an Enclosure Cooling Device

Cooling Basics

To select the proper cooling device for your enclosure, you need to determine how much heat the device must remove from the enclosure to maintain the desired internal temperature, which is the sum of two component heat loads: **Internal Heat Load** and **Heat Transfer Load**.

Internal Heat Load (Q_i)

The sum of all heat generated by the components within the enclosure. This can be calculated by adding the maximum heat output for each device installed in the enclosure (the worst-case conditions for the enclosure). The maximum heat output is typically specified in watts in the manufacturer's documentation. If it is not, contact the manufacturer to request the heat output or for guidance on how to measure or calculate it.

Heat Transfer Load (Q_x)

The heat gained (positive heat transfer) or lost (negative heat transfer) through the enclosure exterior surface with the surrounding ambient air. This can be calculated with the following formula:

Q_x = kAΔT (BTU/h), where:

k = heat transfer coefficient (BTU/(h·ft²·°F))

The heat transfer coefficient is a measure of how easily an enclosure conducts heat from the internal air to the external air, which varies with the enclosure material. Suggested values for various enclosure materials are provided below:

Enclosure Material	*k, BTU/(h·ft²·°F)*
Painted carbon steel	0.97
Stainless steel	0.83
Aluminum	2.1
Polycarbonate, fiberglass, PVC, ABS	0.62

A = exposed enclosure surface area (ft²)

The total surface area of a rectangular enclosure is:

A = 2HW + 2HD + 2WD, where:

H = height

W = width

D = depth

But it's important to properly account for any surfaces that are against walls or floors, as those surfaces will absorb/reject heat from adjacent surfaces at a different rate (that is, have a different k value) than the exposed surfaces. Quantifying that difference is far beyond the scope of this document, but the q value for those surfaces will usually be less than the value for exposed surfaces. Therefore, the conservative design approach should be to ***exclude those surfaces when ΔT < 0 and use the total surface area when ΔT > 0.***

The equations for excluding those surfaces in several common situations are listed below.

Wall-mount (excludes back of the enclosure)	*A = HW + 2HD + 2WD*
Freestanding enclosure (excludes the bottom of the enclosure)	*A = 2HW + 2HD + WD*
Freestanding enclosure against a wall (excludes both the bottom and back)	*A = HW + 2HD + WD*
Freestanding enclosure in a corner (excludes the bottom, back, and one side)	*A = HW + HD + WD*

Using these formulas as written will produce answers in either in² or mm², depending on the enclosure. To convert to ft² use the appropriate conversion:

1 ft² = 144 in²

1 ft² = 92,900 mm²

Selecting an Enclosure Cooling Device

$\Delta T = T_A - T_E$, where T_A is maximum ambient air temperature (°F) and T_E is maximum allowable enclosure air temperature (°F)

Note that ΔT may be negative if the ambient temperature is less than the enclosure temperature. When this is the case, the heat transfer load will also be negative, meaning that the ambient air is providing some degree of cooling. Whereas a positive ΔT indicates that the ambient air is warming the enclosure.

A positive ΔT also indicates that neither a fan nor a heat exchanger is a viable cooling device for this application. Both devices exchange heat between the interior and exterior of the enclosure. Since heat will always move from the higher temperature material to the lower temperature, these devices will add heat to the enclosure which will raise the internal air temperature, not lower it.

The maximum allowable enclosure air temperature will typically be dictated by the maximum operating temperature of the components inside the enclosure. Be sure to choose the component value with the lowest maximum operating temperature.

Required Cooling Capacity (Q_r)

The required cooling capacity (Q_r) for an enclosure is simply the sum of the Internal Heat Load and the Heat Transfer Load. However, as presented these values cannot be simply added since one is typically given in watts and the other in BTU/h. Additionally, fan and heat exchanger sizing formulas require the total heat load in watts, while the cooling capacities of vortex coolers are generally expressed in BTU/h. However, the cooling capacities of air conditioners and thermoelectric coolers may be expressed in either unit, or sometimes both. Apply one of the following conversions to the heat loads to add them:

1 W = 3.41 BTU/h $\quad Q_r\ (BTU/h) = Q_i \times 3.41\ (BTU/h)/W + Q_x$

1 BTU/h = 0.293 W $\quad Q_r\ (W) = Q_i + Q_x \times 0.293\ W/(BTU/h)$

Vortex Cooler Selection

Once the required cooling capacity has been calculated, selection of a vortex cooler is simple – just select a cooler with a nominal cooling capacity greater than the calculated requirement.

Air Conditioner and Thermoelectric Cooler Selection

Selecting an air conditioner or thermoelectric cooler is more complex because their performance depends on both the ambient temperature and the enclosure temperature. Generally, more strenuous operating parameters (higher ambient temperature, lower enclosure air temperature) will reduce the unit's performance. For this reason, manufacturers publish curves that graphically describe the unit's cooling capacity over a range of conditions. Here's an example:

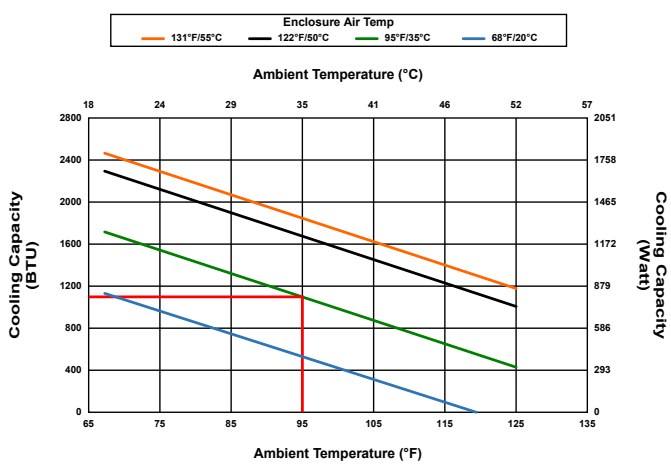

As indicated by the red lines, this air conditioner would be able to remove 1000 BTU/H when the ambient temperature is 95°F and enclosure air temperature is 95°F. If the ambient temperature was only 75°F, the cooling capacity of the unit would increase to approximately 1105 BTU/H as the lower ambient temperature increases the unit's condenser's ability to reject heat to the surrounding atmosphere. Conversely, at a 95°F ambient temperature and a 68°F enclosure air temperature, the unit's capacity would be reduced to approximately 945 BTU/H, as the lower enclosure air temperature would reduce the heat transfer rate between the internal enclosure air and the unit's evaporator coils.

To determine if an air conditioner or thermoelectric cooler meets application requirements, simply plot the two maximum temperatures used in the ΔT calculations and read the corresponding cooling capacity on the y-axis of the chart. If that value exceeds the required cooling capacity, the air conditioner will be adequate for the application. If not, select a larger capacity unit.

Selecting an Enclosure Cooling Device

The 95°F/95°F point is typically used as the nominal cooling capacity of the unit. But always keep in mind that any nominal capacity only represents one set of operating parameters. If those parameters to not match the actual application conditions, the actual performance of the air conditioner/thermoelectric cooler will be different.

> Never rely solely on a nominal cooling capacity when selecting an air conditioner or a thermoelectric cooler! The nominal capacity is solely intended to provide an approximation to get the user "in the ballpark" of the selection process.

In addition to the required cooling capacity, an air conditioner or thermoelectric cooler should also maintain the NEMA rating of the enclosure. Ideally, it should also operate on a voltage already available within the enclosure to avoid necessitating a transformer or power supply.

Air Conditioner Selection Example

A NEMA 12 Wiegmann N12302412 wall-mount enclosure (30 in high x 24 in wide x 12 in deep) contains a GS4-4060 AC drive (60 HP 460V) that has a maximum allowable operating temperature of 104°F and is inside a plant with a maximum ambient air temperature of 115°F.

The GS4-4060 specifications table indicates its maximum Watt Loss to be 1147 W.

Internal heat load:

$$Q_i = 1147\ W \times 3.413\ (BTU/h)/W = 3914\ BTU/h$$

Heat load transfer:

$$k = 0.97\ BTU/(h \cdot ft^2 \cdot °F)$$

$$\Delta T = 115°F - 104°F = 11°F$$ (Reminder: ΔT >0 means that fans or heat exchangers will not cool the enclosure!)

$$A = [2(30\ in \times 24\ in) + 2(30\ in \times 12\ in) + 2(24\ in \times 12\ in)]/144\ in^2/ft^2 = 19\ ft^2$$

$$Q_x = kA\Delta T = (0.97\ BTU/(h \cdot ft^2 \cdot °F))(19\ ft^2)(11°F) = 202\ BTU/h$$

Required cooling capacity:

$$Q_r = Q_i + Q_x = 3914\ BTU/h + 202\ BTU/h = 4116\ BTU/h$$

AutomationDirect offers several NEMA 12 460VAC models that meet or exceed 4605 BTU/h at 104°F. The curves for the appropriate sizes of some of these series are shown below.

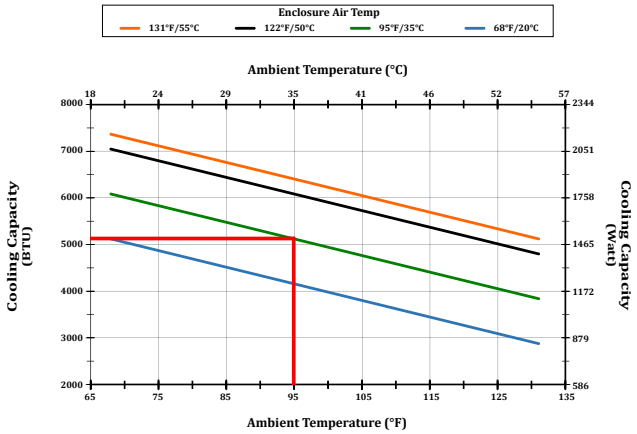

The NEMA 12 460VAC selection from this series is SCE-AC5100B460V.

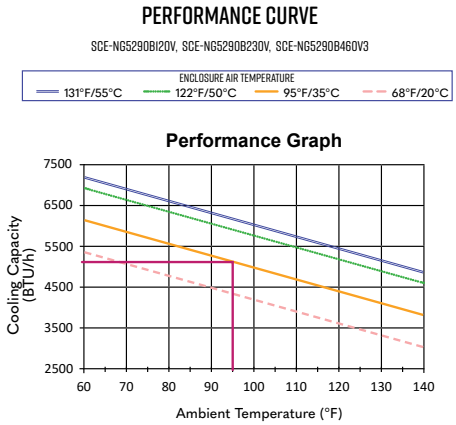

The NEMA 12 460VAC selection from this series is SCE-NG5290B460V3.

Selecting an Enclosure Cooling Device

Heat Exchanger Selection

Heat exchanger capacities also depend on the internal enclosure air temperature and the ambient temperature, but the dependency is a simple linear relationship between the capacity and ΔT. So rather than graphing the cooling capacity of the heat exchanger, it is simply expressed in terms of W/°C and compared to the value of $-Q_r/\Delta T$.

To convert ΔT from °F to °C, use the conversion 1°C = 1.8°F.

Note that this simplified conversion only works for temperature differences. It does not work for measured temperatures since 0°F ≠ 0°C. DO NOT apply this conversion directly to the ambient and enclosure air temperatures. Only apply it to ΔT.

Heat Exchanger Selection Example

A NEMA 12 Wiegmann N12302412 wall-mount enclosure (30 in high x 24 in wide x 12 in deep) contains a GS4-4010 AC drive (10 HP 460 volt) that has a maximum allowable operating temperature of 104°F and is in a plant that has a maximum ambient air temperature of 90°F.

The GS4-4010 specifications table indicates its maximum Watt Loss to be 292 watts.

Internal heat load:

$$Q_i = 292\ W$$

Heat load transfer:

$$k = 0.97\ BTU/(h \cdot ft2 \cdot °F)$$

$$\Delta T = 90°F - 104°F = -14°F$$ (Since ΔT <0, a heat exchanger is a potentially valid cooling device)

$$\Delta T = -14°F/(1.8°F/°C) = -7.8°C$$

$$A = [(30\ in \times 24\ in) + 2(30\ in \times 12\ in) + 2(24\ in \times 12\ in)]/144\ in^2/ft^2 = 14\ ft^2$$

$$Q_x = kA\Delta T = (0.97\ BTU/(h \cdot ft^2 \cdot °F))(14\ ft^2)(-14°F) = -190\ BTU/h \times 0.293\ W/(BTU/h) = -56\ W$$

Required cooling capacity:

$$Q_r = Q_i + Q_x = 292\ W - 56\ W = 236\ W$$

$$-Q_r/\Delta T = -236\ W/-7.8°C = 30\ W/°C$$

A Stratus heat exchanger with a capacity of at least 30 W/°C is needed, such as a TE30-030-17-04.

Selecting an Enclosure Cooling Device

Fan Selection

A fan cools the enclosure simply by displacing the hot air within the enclosure with cooler air from the outside. Combining the specific heat of air, the density of air, and various conversion factors into a single coefficient gives a simple equation for correlating a fan's required airflow rate to the enclosure's required cooling capacity:

$$F_r = -(3.17\ CFM\cdot°F/W)Q_r / \Delta T$$

Once the fan airflow requirement is determined, fan selection is simply a matter of finding a fan with an airflow greater than the required airflow. Most applications will require an accompanying grille and one or more filters which will restrict airflow to some degree. (Exceptions would be a NEMA 1 enclosure or a similar circumstance where an open vent can be used for exhaust/makeup air.) Therefore, the fan selection should almost always be made based on the "Airflow with Grille and Filters (CFM)" column of the specifications, not the fan's Free Airflow.

Fan Selection Example

A NEMA 12 Wiegmann N12302412 wall-mount enclosure (30 in high x 24 in wide x 12 in deep) contains a GS4-2025 AC drive (25 HP 230 volt) that has a maximum allowable operating temperature of 104°F and is in a plant that has a maximum ambient air temperature of 92°F.

The GS4-2025 specifications table indicates its maximum Watt Loss to be 733 watts.

Internal heat load:

$$Q_i = 733\ W$$

Heat load transfer:

$$k = 0.97\ BTU/(h\cdot ft^2\cdot°F)$$

$$\Delta T = 92°F - 104°F = -12°F \text{ (Since } \Delta T < 0\text{, a fan is a potentially valid cooling device)}$$

$$A = [(30\ in \times 24\ in) + 2(30\ in \times 12\ in) + 2(24\ in \times 12\ in)]/144\ in^2/ft^2 = 14\ ft^2$$

$$Q_x = kA\Delta T = (0.97\ BTU/(h\cdot ft^2\cdot°F))(12\ ft^2)(-12°F) = -163\ BTU/h \times 0.293\ W/(BTU/h) = -48\ W$$

Required cooling capacity:

$$Q_r = Q_i + Q_x = 733\ W - 48\ W = 685\ W$$

Required air flow:

$$F_r = -(3.17\ CFM\cdot°F/W)(685\ W)/-12°F = 181\ CFM$$

Possible 230VAC fan & grille combinations include:

- Stego 018840-40 exhaust fan with 118840-30 grille (187 CFM)
- Fandis FF20A230UE1 intake fan with FF20U grille (209 CFM)
- Stego 018740-30 intake fan with 118740-00 grille (220 CFM)
- Stego 018840-00 exhaust fan with 118840-30 grille (243 CFM)
- Fandis TP19U230B1 roof-mount exhaust fan with FF20U grille (297 CFM)

Filter Fan

STEGO INC.
SIMPLY INNOVATIVE. BETTER FOR SURE.

018000-02

Applications

Filter fans provide an optimum climate in enclosures. The interior temperature of enclosures is reduced by channeling cooler filtered outside air into the enclosure, thus expelling heated internal air. The resulting air flow prevents formation of localized heat pockets and protects electronic components from overheating.

Outdoor filter fans are used in outdoor enclosures where warm air must be dissipated. To clean and exchange the filter mat, you open the lockable door of the outdoor hood, eliminating the need to allow interior access to the enclosure. IP55 protection type is achieved due to the special design of the hood and the use of fine filter mats.

Features

- Easy filter change
- Outer door lock for outdoor models
- Impact resistant
- Weather/UV-resistant UL-f1
- Flammability Rating: UL 94V-0
- No-screw installation — except outdoor models
- Low noise
- 120VAC and 24VDC models available
- Service life — 50,000 hrs@77°F (25°C) + 65%RH
- Connection type - 12 to 69 CFM - 2 wires w/case clamps, AWG 14, length 4.0in [103mm]/136 to 373 CFM - 3 pole terminal, AWG 14, clamping torque 0.8 N·m
- Airflow direction easily switched by reversing the axial fan (except on models 018040-01and 018050-01
- Includes self-adhesive gasket pre-installed on frame
- Optional mounting screws for additional support
- G3 (coarse), G4 (medium) and M5 (fine) replacement filter mats available

Standards

- All models: IP54, VDE, EAC, UL 12 when using supplied filter (outdoor models IP55)
- UL recognized — file: E234324

Note: Using fine filter mat M5 reduces the air-flow. (No test data available for G3 filter mats. See Stego Air Volume and Pressure Data, later in this section.)

Part Number	Price	Drawing Link	Cutout Dimensions	Operating Voltage	Power Consumption	Current Draw	FreeAirflow	Air Flow with Grille and Filters	Max. Static Pressure	Sound Level	Min/Max Operating Temp.	Included Filter Rating	Average Arrestance
Filter Fans													
018000-01	$92.00	PDF	3.82 x 3.82 [97 x 97]	115 VAC	13W	160 mA	14 CFM	11 CFM	18Pa	31 dBA	14/158°F [-10/70°C]	G4 (medium)	94%
018000-02	$123.00	PDF		24 VDC	2.2W	60 mA	12 CFM	9.4 CFM	19Pa				
018010-01	$103.00	PDF	4.92 x 4.92 [125 x 125]	115 VAC	15W	180 mA	37 CFM	28 CFM	30Pa	40 dBA			
018010-02	$137.00	PDF		24 VDC	5W	210 mA	32 CFM	25 CFM	32Pa				
018020-01	$122.00	PDF	6.93 x 6.93 [176 x 176]	115 VAC	15W	180 mA	69 CFM	46 CFM	27Pa	39 dBA			
018020-02	$140.00	PDF		24 VDC	5W	210 mA	60 CFM	40 CFM	23Pa				
018030-01	$358.00	PDF	9.84 X 9.84 [250 X 250]	115 VAC	68W	800 mA	202 CFM	156 CFM		56 dBA			
018030-03	$373.00	PDF		24 VDC	20W	840 mA	176 CFM	135 CFM	27Pa	53 dBA			
018040-01	$211.00	PDF	6.93 X 6.93 [176 X 176]	115 VAC	39W	470 mA	136 CFM	84 CFM	60Pa	52 dBA	-13/140°F [-25/60°C]		
018050-01	$295.00	PDF	9.84 X 9.84 [250 X 250]		85W	780 mA	372 CFM	203 CFM	85Pa	65 dbA			
Outdoor Filter Fans (Rain Hoods)													
018210-02	$166.00	PDF	4.92 x 4.92 [125 x 125]	115 VAC	15W	180 mA	14 CFM	7.1 CFM	54Pa	40 dBA	14/158°F [-10/70°C]	G5 (fine)	98%
018210-04	$195.00	PDF		24 VDC	5W	210 mA	12 CFM	5.9 CFM	48Pa				

Notes: Performance data (current draw, power consumption, free airflow, airflow with grille and filters, sound level) for all 120VAC fans is based on 60Hz.
Free airflow and maximum static pressure are measured with fan and louvered housing only.
Airflow with grille and filters include entire system: complete fan assembly with filter and exhaust grille with filter.
Dimensions in inches [millimeters].

Filter Fan – Dimensions

Dimensions

018000-01
018000-02

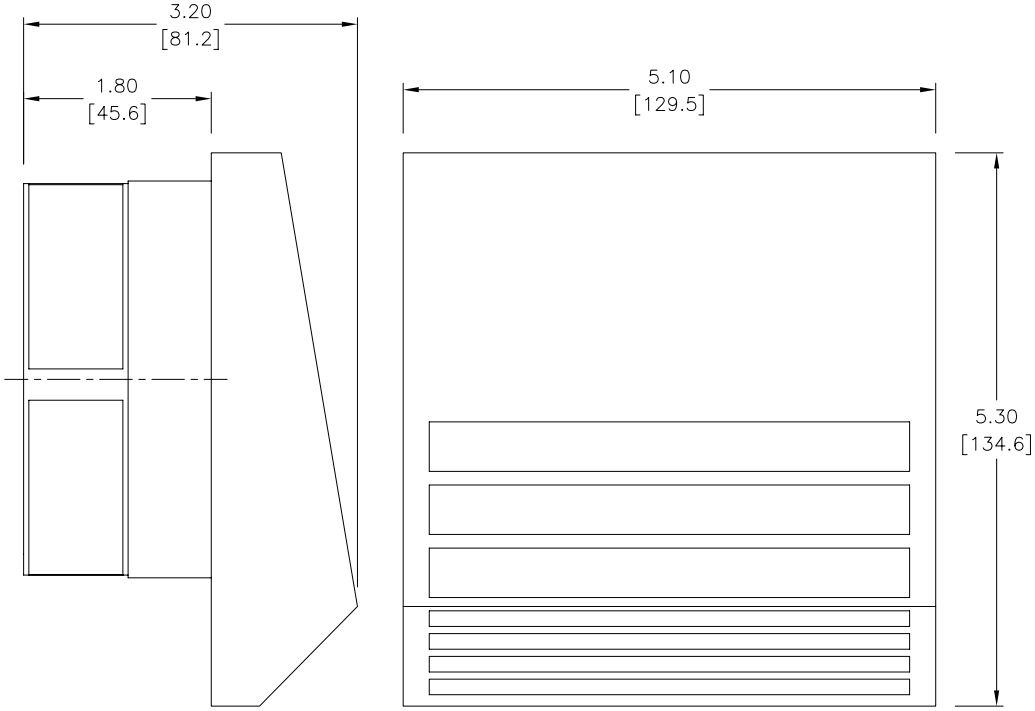

018010-01
018010-02

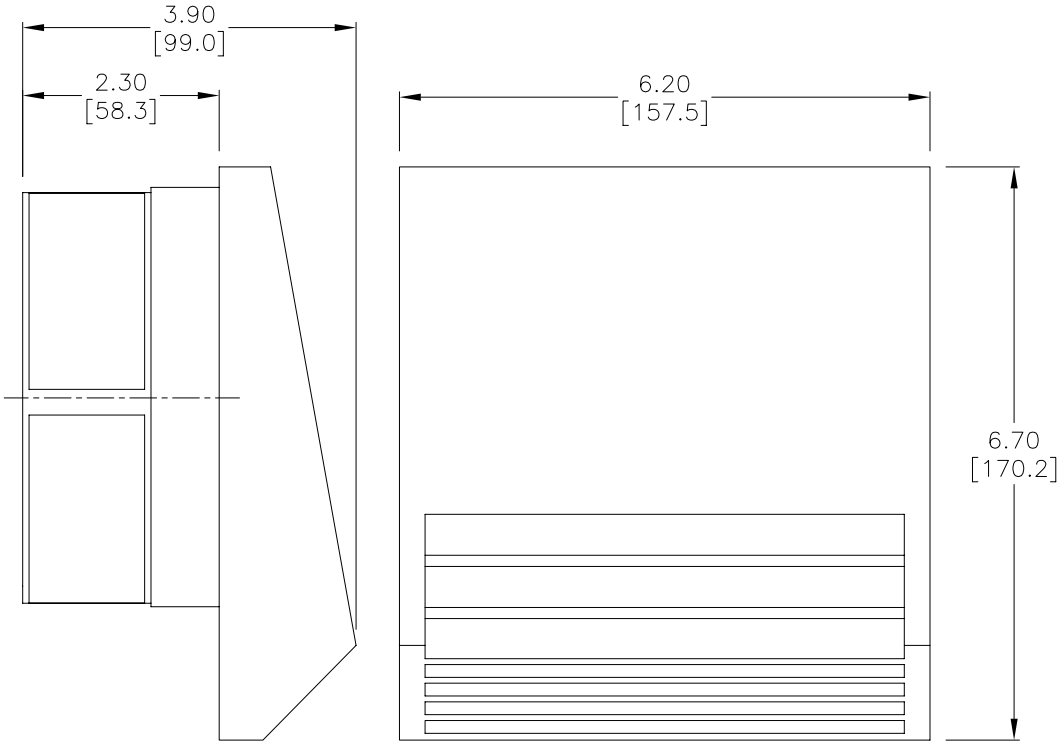

Filter Fan – Dimensions

Dimensions

018210-04
018210-02

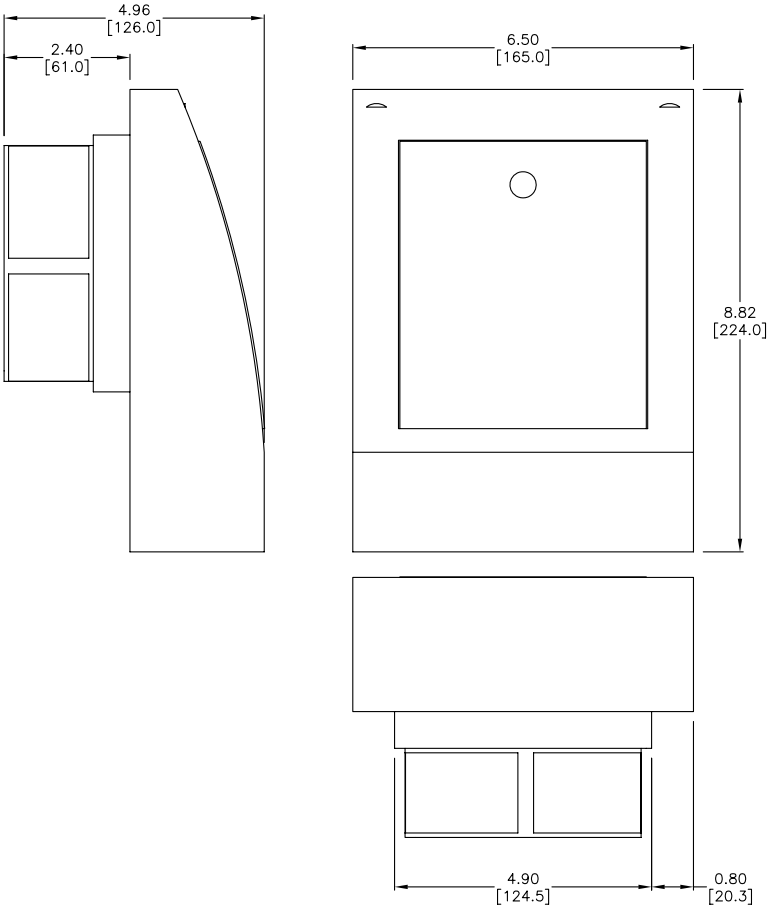

018020-01
018020-02

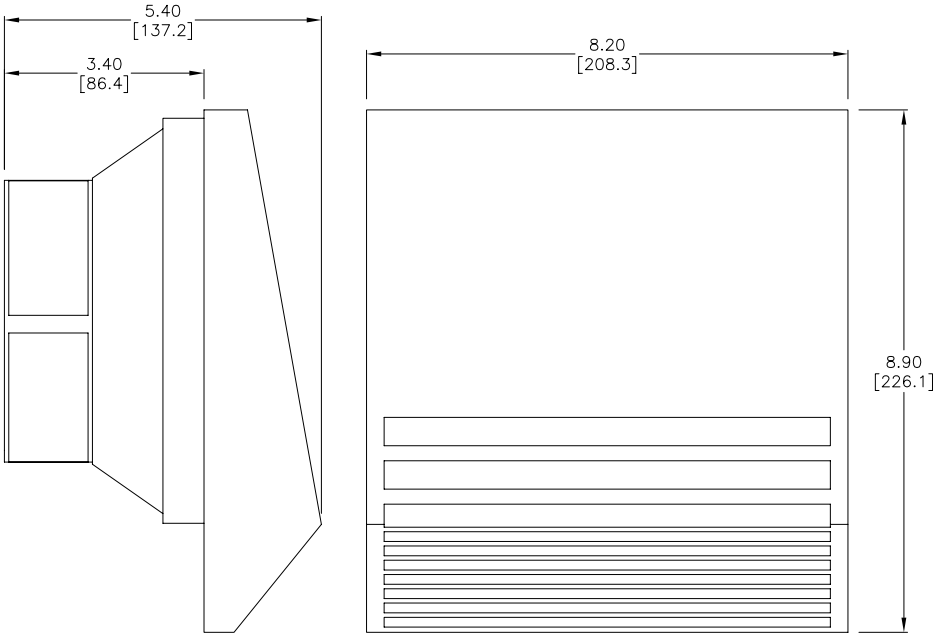

Filter Fan – Dimensions

Dimensions

018040-01

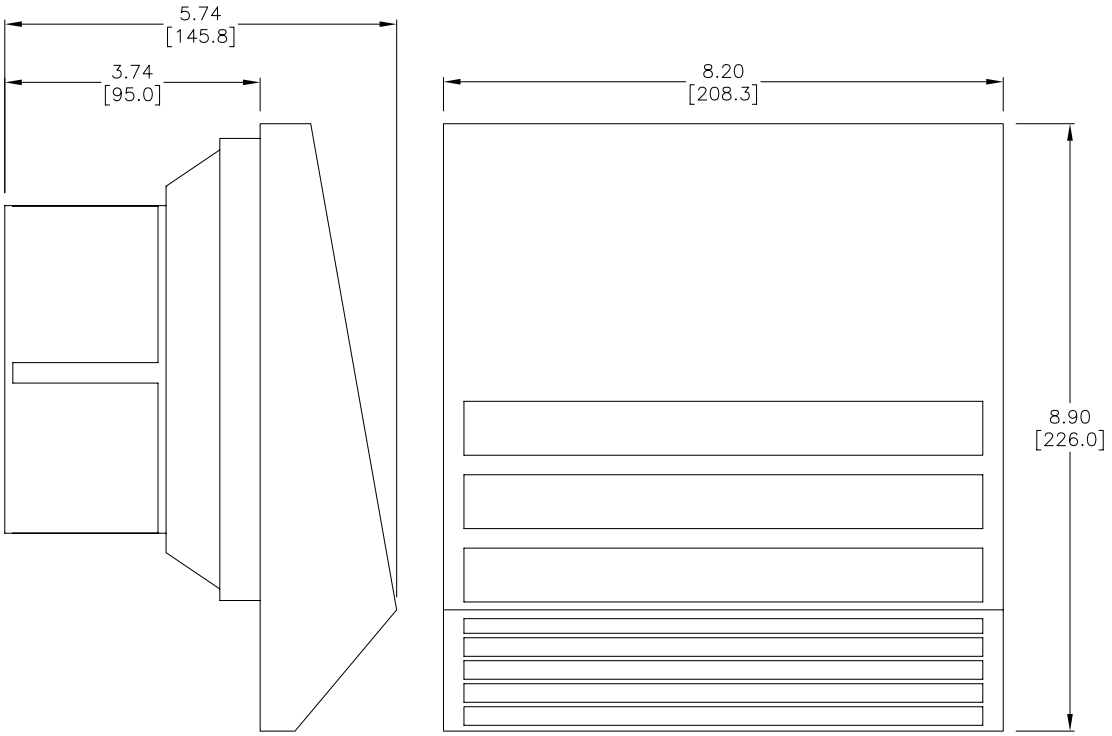

018030-01
018030-03

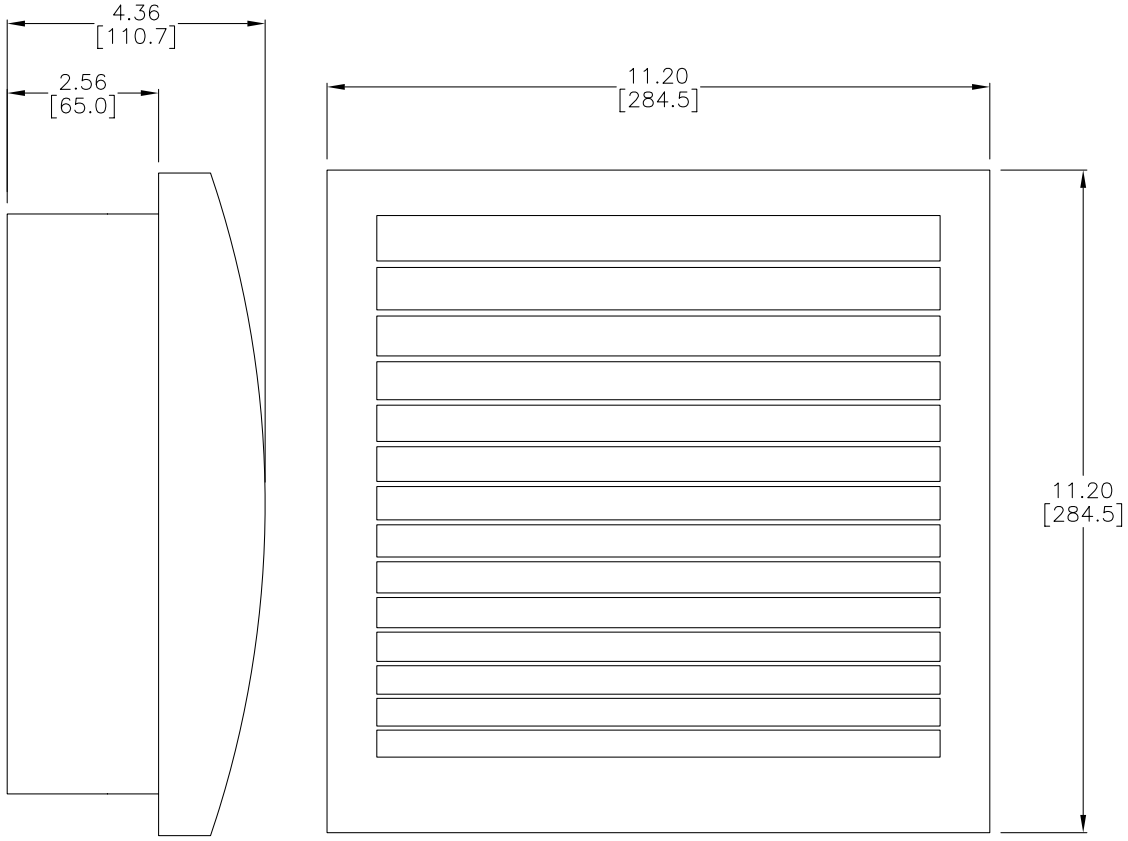

Filter Fan – Dimensions

Dimensions

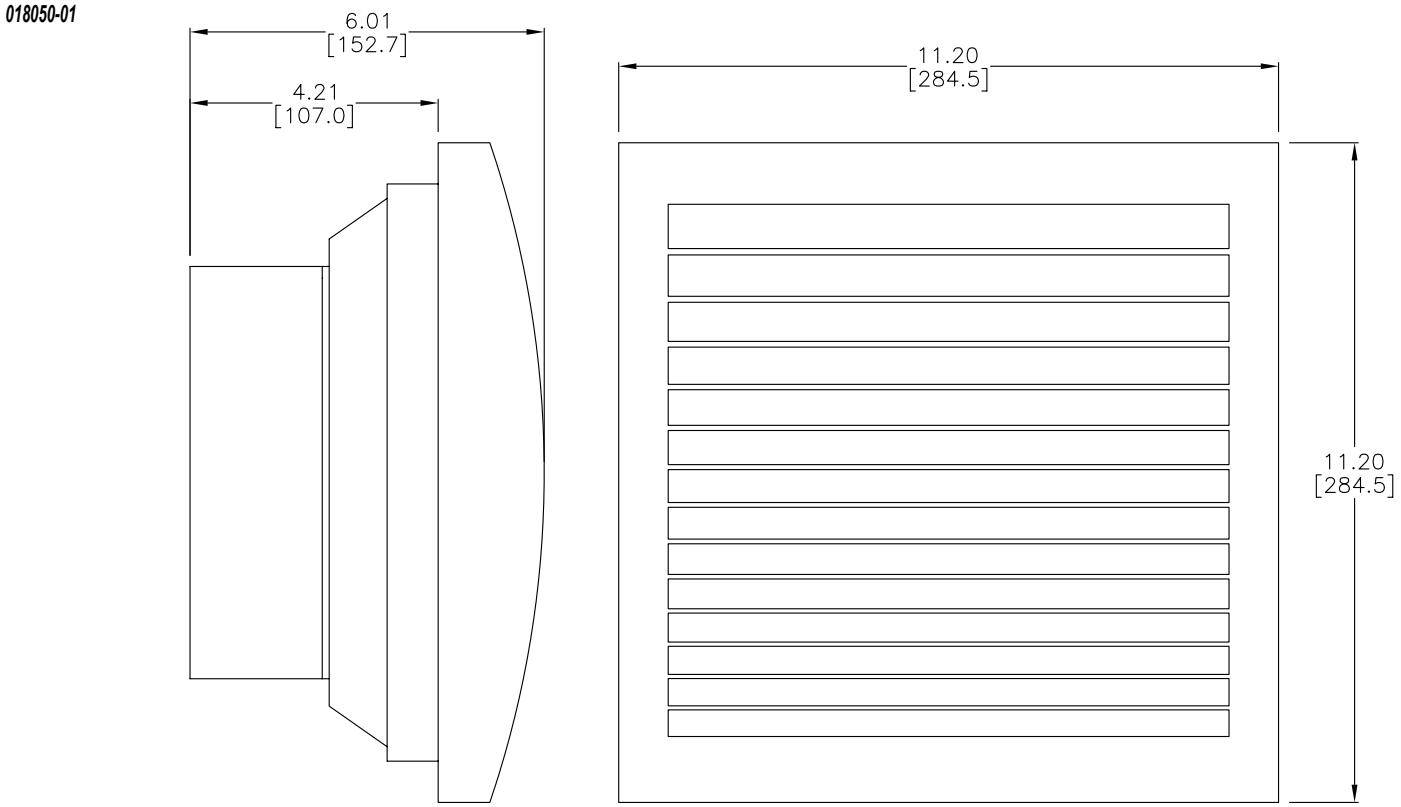

Exhaust Grilles With Filters

118000-00

Features

- No-screw installation
- G3 (coarse), G4 (medium) and M5 (fine) replacement filter mats available

Accessories

- Come with gaskets attached (adhesive-sided to stick on panel)

Part Number	Price	Drawing Link	Cutout Dimensions	Included Filter Rating	Average Arrestance
Exhaust Grilles					
118000-00	$21.00	PDF	3.82 x 3.82 [97 x 97]	G4 (medium)	94%
118010-00	$26.00	PDF	4.92 x 4.92 [125 x 125]		
118020-00	$31.00	PDF	6.93 x 6.93 [176 x 176]		
118030-00	$76.00	PDF	9.84 x 9.84 [250 x 250]		
Outdoor Exhaust Grilles					
118210-00	$121.00	PDF	4.92 x 4.92 [125 x 125]	G5 (fine)	98%

Note: Dimensions in inches (millimeters).

Dimensions

118000-00

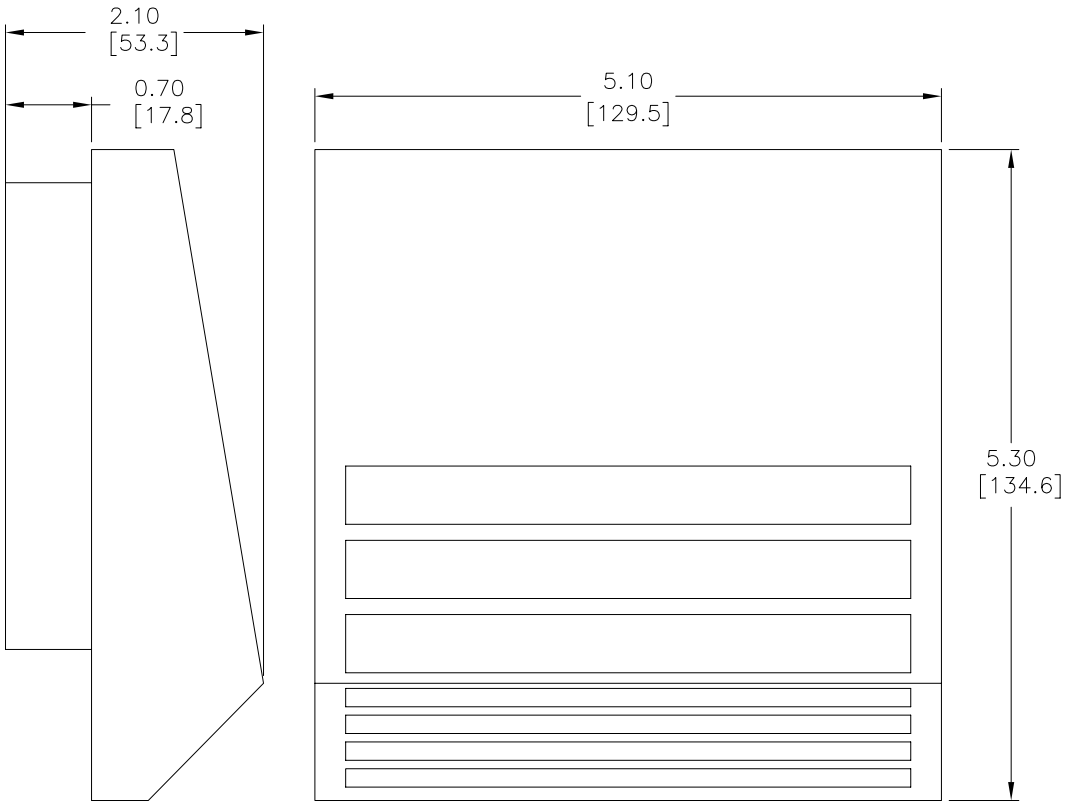

Filter Fan Exhaust Grille Dimensions

Dimensions

118010-00

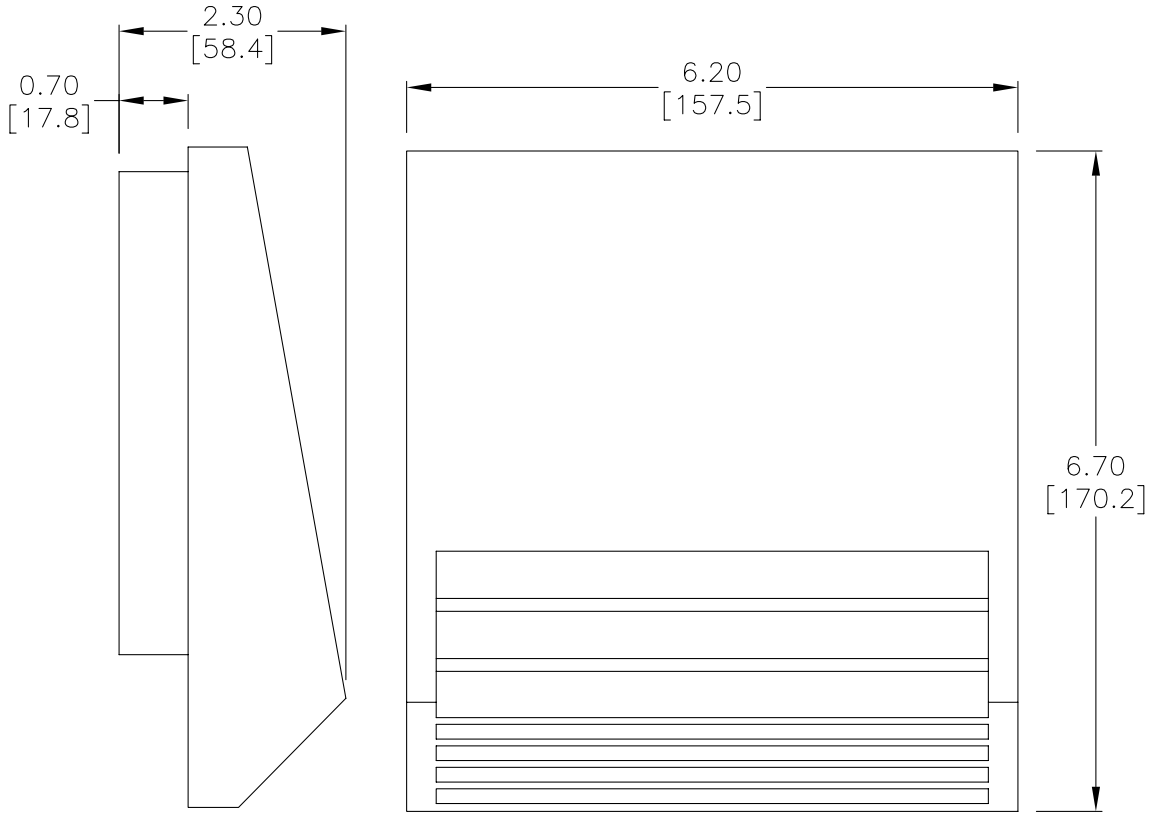

118020-00

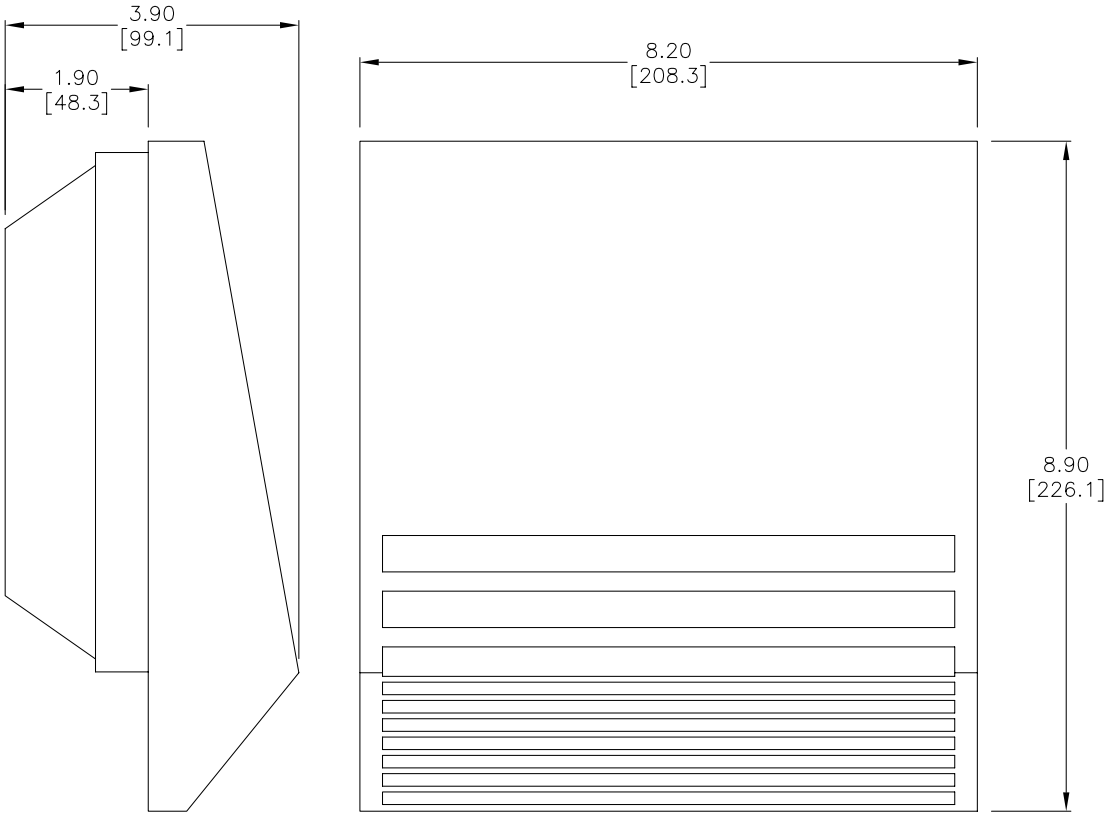

Filter Fan Exhaust Grille Dimensions

Dimensions

118030-00

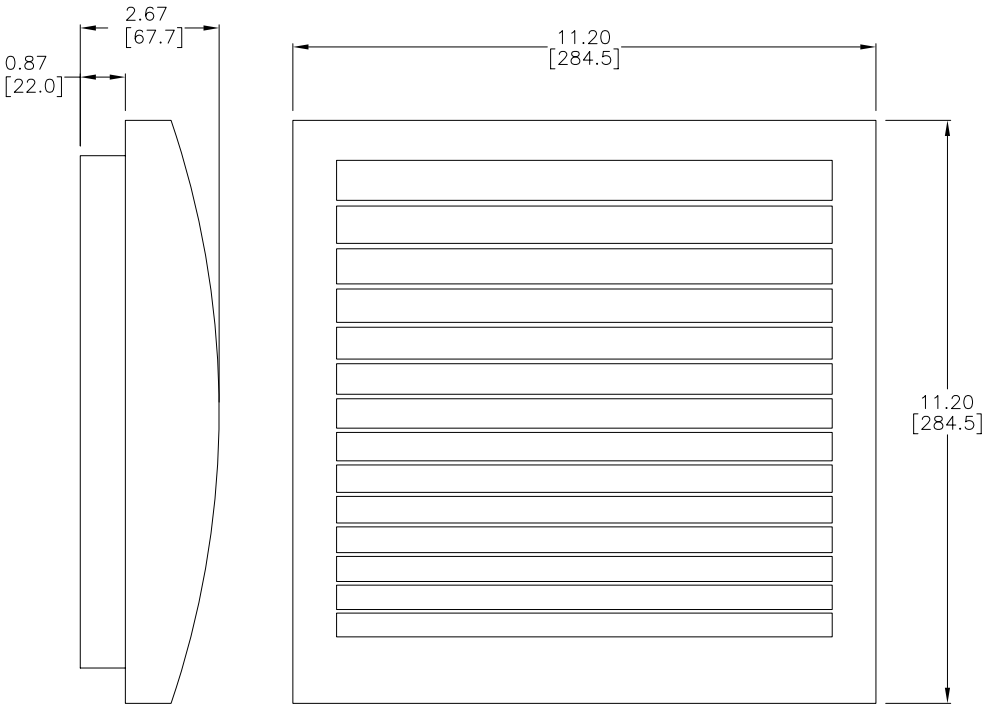

118210-00

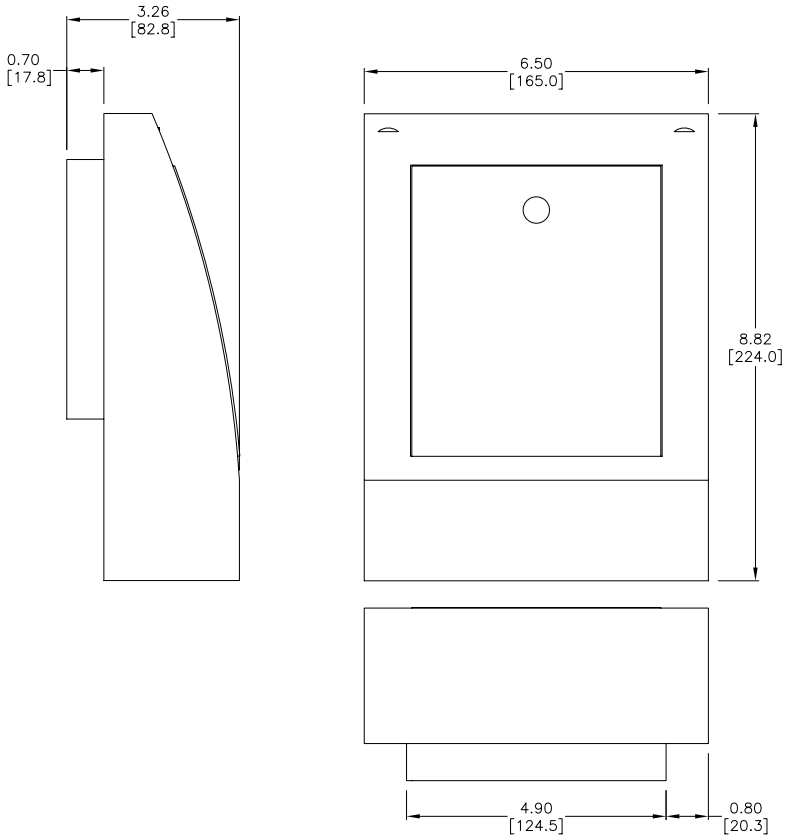

Filter Fan Replacement Filter Mats

086000-00

Filter Mats

- Synthetic fiber with progressive construction
- Temperature resistant to 212°F (100°C)
- Rating: G3 (coarse), G4 (coarse), and M5 (medium)
- Self-extinguishing class F1
- Moisture resistant to 100% RH
- Reusable; can be cleaned with mild soap or vacuum

Applications

- Replacement filter mats for Stego fans, grilles, and vents.

Features

- Filter media for enclosure fans
- Coarse or medium density

Replacement Filter Mats

Part Number	Price	Dimensions HxW in (mm)	Use With Fan Part Number	Use With Grille or Vent Part Number	Filter Rating	Average Arrestance (Filtering Level)	Filter Density g/m2	Pieces per Package
086130-01	$9.00	11.10 X 11.10 [282 X 282]	018600-02 018600-04 018610-00 018610-02	118600-00 018600-02 018600-04 018610-00 018610-02	G3 (coarse)	85%	350 g/m2	3
086330-00	$10.25	3.31 x 3.31 [84 x 84]	018700-30 018701-30 018702-30 018703-30 018709-30 018800-40 018809-40	118800-30		84%	200 g/m2	5
086340-00	$13.75	4.64 x 4.64 [118 x 118]	018010-01 018010-02 018210-02 018210-04 018710-30 018711-30 018712-30 018713-30 018719-30 018810-40 018819-40	118010-00 118210-00 118810-30				
086350-00	$18.00	6.61 x 6.61 [168 x 168]	018020-01 018020-02 018040-01 018720-30 018721-30 018722-30 018723-30 018729-30 018820-40 018829-40	118020-00 118820-30				
086360-00	$23.50	8.46 x 8.46 [215 x 215]	018730-30 018830-40 018839-40	118830-30				
086370-00	$31.00	11.14 x 11.14 [283 x 283]	018740-30 018749-30 018840-40 018849-40	118840-30				

Note: Dimensions in inches [millimeters].

Table continued on next page

Filter Fan Replacement Filter Mats

Replacement Filter Mats								
Part Number	***Price***	***Dimensions HxW in (mm)***	***Use With Fan Part Number***	***Use With Grille or Vent Part Number***	***Filter Rating***	***Average Arrestance (Filtering Level)***	***Filter Density g/m2***	***Pieces per Package***
086000-00	$7.50	3.50 x 3.50 [89 x 89]	018700-30 018701-30 018702-30 018703-30 018709-30 018800-40 018809-40	118800-30	G4 (coarse)	94%	350 g/m2	3
086010-00	$9.25	4.65 x 4.65 [118 x 118]	018000-01 018000-02	118000-00				
086020-00	$11.50	6.61 x 6.61 [168 x 168]	018010-01 018010-02 018210-02 018210-04 018710-30 018711-30 018712-30 018713-30 018719-30 018810-40 018819-40	118010-00 118210-00 118810-30				
086030-00	$8.75	3.50 x 3.50 [89 x 89]	018020-01 018020-02 018040-01 018720-30 018721-30 018722-30 018723-30 018729-30 018829-40 018829-40	118020-00 118820-30				
086040-00	$11.25	4.65 x 4.65 [118 x 118]	018730-30 018739-30 018830-40 018839-40	118830-30				
086050-00	$16.50	6.61 x 6.61 [168 x 168]	018030-01 018030-03 018050-01	118030-00				
086080-00	$28.50	9.72 x 9.72 [247 x 247]	018740-30 018749-30 018840-40 018849-40	118840-30				
086090-00	$35.00	9.72 x 9.72 [247 x 247]	018700-30 018701-30 018702-30 018703-30 018709-30 018800-40 018809-40	118800-30	M5 (medium))	98%	350 g/m2	3
086270-00	$8.75	3.31 x 3.31 [84 x 84]	018000-01 018000-02	118000-00	M5 (medium))	98%		
Note: Dimensions in inches [millimeters].								

Filter Fan Replacement Filter Mats

Replacement Filter Mats								
Part Number	***Price***	***Dimensions HxW in (mm)***	***Use With Fan Part Number***	***Use With Grille or Vent Part Number***	***Filter Rating***	***Average Arrestance (Filtering Level)***	***Filter Density g/m2***	***Pieces per Package***
086280-00	$16.00	8.46 x 8.46 [215 x 215]	018010-01 018010-02 018210-02 018210-04 018710-30 018711-30 018712-30 018713-30 018719-30 018810-40 018819-40	118010-00 118210-00 118810-30	M5 (medium))	98%	350 g/m2	3
086290-00	$22.00	11.14 x 11.14 [283 x 283]	018020-01 018020-02 018040-01 018720-30 018721-30 018722-30 018723-30 018729-30 018820-40 018829-40	118020-00 118820-30				
086300-00	$8.75	3.31 x 3.31 [84 x 84]	018740-30018730-30 018739-30 018830-40 018839-40	118840-30	M5 (medium))	98%	360 g/m2	3
086310-00	$16.00	8.46 x 8.46 [215 x 215]	018030-01 018030-03 018050-01	118030-00				
086320-00	$22.00	11.14 x 11.14 [283 x 283]	018740-30 018749-30 018840-40 018849-40	118840-30				
Note: Dimensions in inches [millimeters].								

Air Volume and Pressure Data for Upgraded Filter Mats

Airflow and Pressure Data						
Fan Part Number	Filter Mat Airflow (cfm)				Filter Mat Static Pressure (Pa)	
	G4 fan filter*	G4 fan filter and exhaust filter**	M5 fan filter free flow*	M5 fan filter with exhaust filter**	G4 fan filter free flow*	M5 fan filter*
018000-02	—	9	4	3	—	37
018000-01	—	11	5	4	—	35
018010-02	—	25	16	13	—	53
018010-01	—	28	19	15	—	50
018020-02	—	40	31	21	—	30
018020-01	—	46	36	24	—	35
018040-01	—	84	58	36	—	100
018030-03	—	135	47	36	—	46
018030-01	—	156	54	42	—	54
018050-01	—	203	145	83	—	140
018700-30	9.4	7.1	4.1	3.5	48	48
018800-00	14	7.7	14	4.1	48	48
018800-40	11	7.7	11	4.7	48	48
018710-30	28	25	14	12	76	76
018810-00	57	26	57	12	76	76
018810-40	33	24	33	12	76	76
018809-40	83	74	48	41	140	140
018720-30	155	74	155	40	140	140
018820-00	106	66	106	38	140	140
018820-40	147	130	70	62	132	132
018730-30	316	140	316	74	136	136
018830-00	183	121	183	68	132	132
018830-40	250	212	118	94	107	107
018740-30	428	218	428	109	117	117
018840-00	300	153	300	100	107	107

Notes: *Fan with filter and louver
****Fan with filter, louver, exhaust filter, and grille.**
Part numbers not listed in this table have no test data available.

Hose-Proof Hood for Stego Fans

Features

- Stainless steel hood
- Food-safe silicone seal
- Increase of protection class to UL Type 4X
- Easy to clean
- Filter mat change from outside
- Impact-resistant
- Optional security feature to restrict unauthorized access (M6x1 security screw included)
- Weather resistant
- Versatile
- Protective grid
- Mounting screws provided

Standards

- UL 4/4X when used with STEGO Filter Fan Plus and Filter Fans
- UL Recognized File No. E234324
- RoHS 2 compliant
- IP56

Applications

- Designed to increase the protection class and serve as a protective cover to filter fans, intake and exit filters
- Used for protection against water projected by a hose and extreme climatic influences if located oudoors in industrial applications with harsh environmental conditions
- Hood removes easily for cleaning and filter change without opening the enclosure

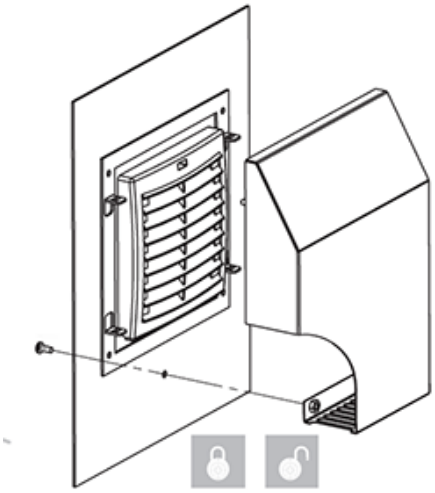

Hose-Proof Hood Locking Mechanism

Hose-Proof Hood for Stego Fans

Part Number	Price	Stego Filter Fan Plus FPI/FPO Cutout Size	Stego Filter Fan Cutout Size	Dimensions (H x W x D)	Max. Covered Area (X x Y)	Weight (lb)
086700-00	$156.00	3.62 x 3.62 [92 x 92]	3.82 x 3.82 [97 x 97]	8.42 x 7.67 x 1.88 [214 x 195 x 48]	5.27 x 5.63 [134 x 143]	1.76
086710-00	$189.00	4.88 x 4.88 [124 x 124]	4.92 x 4.92 [125 x 125]	11.00 x 8.92 x 2.39 [280 x 226 x 61]	6.39 x 6.75 [162 x 171]	2.64
086720-00	$225.00	6.93 x 6.93 [176 x 176]	6.93 x 6.93 [176 x 176]	14.01 x 11.44 x 2.68 [356 x 291 x 68]	9.19 x 9.19 [233 x 233]	4.40
086730-00	$282.00	8.78 x 8.78 [223 x 223]	9.84 x 9.84 [250 x 250]	16.19 x 14.5 x 3.07 [411 x 388 x 78]	11.69 x 11.31 [297 x 287]	6.17
086740-00	$354.00	11.46 x 11.46 in [2391 x 231 mm]	—	18.94 x 15.96 x 4.05 [481 x 405 x 103]	13.25 x 13.31 [337 x 338]	8.15

Notes: Dimensions in inches [millimeters].
None of the above models fit 018210-04 and 018210-02 outdoor filter fans.
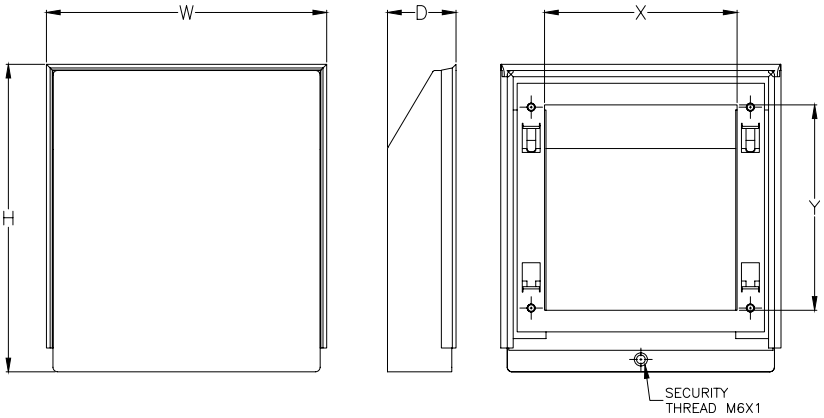
Dimensions