Modular Fuse Holders for Class J Fuses

CH30J1

CH30J2I

CH30J3

Description

- Choice of LED indicator or non-indicating fuse holder
- Comes in standard 1-, 2- and 3-Pole ganged assemblies where all fuses are extracted simultaneously
- Meets requirements of IEC 60529 for IP-20 finger safe rating
- 35mm DIN rail and chassis (6-32 UNC Pan Head recommended) mounting features
- Fuseholder wire ports dual wire rated from 18 to 3 AWG

Specifications

Construction: Thermoplastic, with tin-plated copper clip
UL Flammability: 94V-0

Voltage Ratings: 600 Volts AC/DC (or less)

Ampere Ratings: 1 - 60 Amps

Interrupting Rating: 200,000 RMS Symmetrical Amps

Minimum Indicating Voltage (neon lamp): 90 Volts

Nominal Operating Current (neon lamp): 34 mA (460 VAC)

Agency Approvals

- Listed UL 512, Guide IZLT, File E14853
- CSA Certified per C22.2 Nos. 39 Class 6225-01, File LR47235
- CE compliance for the European Union Low Voltage Directive

CH Series Modular Fuse Holders for Class J Fuses

Amp Rating	Part Number	Amps	Type	Poles	Maximum Wire Size	Pcs/Pkg	Weight (lbs.)	Price
30A	CH30J1	0.5 to 30	Easy ID window	1	18 -1 AWG Single 18 -3 AWG Dual 75°C	6	2.8	$237.00
	CH30J2		Easy ID window	2		3		$331.00
	CH30J3		Easy ID window	3		2		$327.00
	CH30J1I		Neon indicator	1		6		$275.00
	CH30J2I		Neon indicator	2		3		$377.00
	CH30J3I		Neon indicator	3		2		$359.00
60A	CH60J1	31 to 60	Easy ID window	1		6	3.4	$317.00
	CH60J2		Easy ID window	2		3		$371.00
	CH60J3		Easy ID window	3		2		$376.00
	CH60J1I		Neon indicator	1		6		$355.00
	CH60J2I		Neon indicator	2		3		$441.00
	CH60J3I		Neon indicator	3		2		$404.00

Dimensions

Dimension	CH30J in (mm)	CH60J in (mm)
A	1.28 (32.5)	1.58 (40.0)
B	2.56 (65.0)	3.16 (80.0)
C	3.84 (97.5)	4.72 (120.0)
D	4.59 (116.6)	4.88 (124.0)
E	2.83 (71.8)	3.31 (84.1)
F	3.56 (90.4)	3.85 (97.9)
G	1.28 (32.5)	1.58 (40.0)
H	0.18 (4.44)	0.18 (4.44)

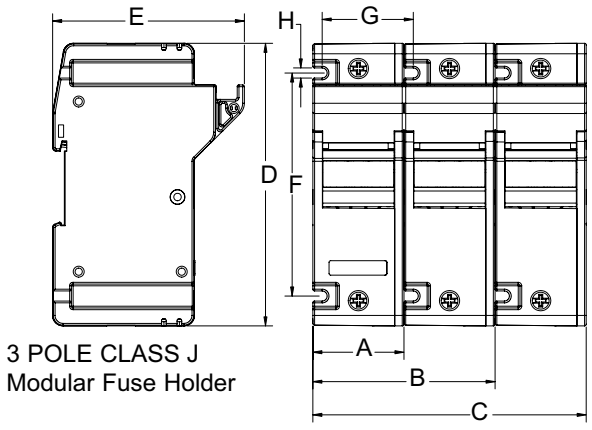

3 POLE CLASS J
Modular Fuse Holder