C-more Operator Panels Overview

Getting started

Installing the software and configuring the ***C-more*** panel is simple. You will need the following to successfully connect, configure and send a project to the panel:

- ***C-more*** HMI - 6in, 7in wide, 8in, 10in, 10in wide, 12in, 15in or EA9-RHMI
- ***C-more*** Programming Software, p/n EA9-PGMSW
- ***C-more*** programming cable, USB or Ethernet
- 12-24 VDC switching power supply or the optional ***C-more*** AC Power Adapter, p/n EA-AC
- Personal Computer - to run ***C-more*** programming software
- PLC communications cable (serial or Ethernet) to connect the ***C-more*** HMI to your controller

Part Number	Description	Price
EA9-T6CL-R	***C-more*** EA9 series touch screen HMI, 6in color TFT LCD, analog resistive, 320 x 240 pixel, QVGA, LED backlight, (1) serial, (2) USB ports and (1) memory card slot.	$718.00
EA9-T6CL	***C-more*** EA9 series touch screen HMI, 6in color TFT LCD, analog resistive, 320 x 240 pixel, QVGA, LED backlight, (3) serial, (1) Ethernet, (2) USB ports, (1) memory card slot and (1) audio line out.	$994.00
EA9-T7CL-R	***C-more*** EA9 series touch screen HMI, 7in color TFT LCD, analog resistive, widescreen, 800 x 480 pixel, WVGA, LED backlight, (1) serial, (1) Ethernet, (2) USB ports and (1) memory card slot.	$688.00
EA9-T7CL	***C-more*** EA9 series touch screen HMI, 7in color TFT LCD, analog resistive, widescreen, 800 x 480 pixel, WVGA, LED backlight, (3) serial, (1) Ethernet, (2) USB ports, (1) memory card slot and (1) audio line out.	$794.00
EA9-T8CL	***C-more*** EA9 series touch screen HMI, 8in color TFT LCD, analog resistive, 800 x 600 pixel, SVGA, LED backlight, (3) serial, (1) Ethernet, (2) USB ports, (1) memory card slot and (1) audio line out.	$1,383.00
EA9-T10CL	***C-more*** EA9 series touch screen HMI, 10in color TFT LCD, analog resistive, 800 x 600 pixel, SVGA, LED backlight, (3) serial, (1) Ethernet, (2) USB ports, (1) memory card slot and (1) audio line out.	$1,778.00
EA9-T10WCL	***C-more*** EA9 series touch screen HMI, 10in color TFT LCD, analog resistive, widescreen, 1024 x 600 pixel, WSVGA, LED backlight, (3) serial, (1) Ethernet, (2) USB ports, (1) memory card slot and (1) audio line out.	$986.00
EA9-T12CL	***C-more*** EA9 series touch screen HMI, 12in color TFT LCD, analog resistive, 800 x 600 pixel, SVGA, LED backlight, (3) serial, (1) Ethernet, (2) USB ports, (2) memory card slots, (1) HDMI video out and (1) audio line out.	$1,545.00
EA9-T15CL-R	***C-more*** EA9 series touch screen HMI, 15in color TFT LCD, analog resistive, 1024 x 768 pixel, XGA, LED backlight, (1) serial, (1) Ethernet, (2) USB ports and (2) memory card slots.	$1,830.00
EA9-T15CL	***C-more*** EA9 series touch screen HMI, 15in color TFT LCD, analog resistive, 1024 x 768 pixel, XGA, LED backlight, (3) serial, (1) Ethernet, (2) USB ports, (2) memory card slots, (1) HDMI video out and (1) audio line out.	$2,803.00
EA9-RHMI	***C-more*** EA9 series headless HMI, (2) serial, (1) Ethernet and (2) USB ports, (1) HDMI audio/video out and (1) memory card slot.	$521.00
EA9-PGMSW	***C-more*** Windows programming software, USB or free download. For use with ***C-more*** EA9 series touch panels. Requires USB or Ethernet connection to touch panel.	$13.00 on USB, or FREE download
USB-CBL-AB3	AutomationDirect programming cable, USB A to USB B, 3ft cable length. For use with ***C-more*** HMIs, Do-more and Productivity series CPUs and most USB devices.	$12.00
USB-CBL-AB6	AutomationDirect programming cable, USB A to USB B, 6ft cable length. For use with ***C-more*** HMIs, Do-more and Productivity series CPUs and most USB devices.	$16.00
USB-CBL-AB10	AutomationDirect programming cable, USB A to USB B, 10ft cable length. For use with ***C-more*** HMIs, Do-more and Productivity series CPUs and most USB devices.	$36.50
USB-CBL-AB15	AutomationDirect programming cable, USB A to USB B, 15ft cable length. For use with ***C-more*** HMIs, Do-more and Productivity series CPUs and most USB devices.	$42.50

C-more Selection Guide & Specifications

Specification \ Model	12" TFT color w/ full features	15" TFT color w/ base features	15" TFT color w/ full features
Part Number	EA9-T12CL	EA9-T15CL-R	EA9-T15CL
Price	$1,545.00	$1,830.00	$2,803.00
Display Actual Size and Type	12.1" TFT color	15.0" TFT color	
Display Viewing Area	9.69" x 7.26" [246.0 mm x 184.5 mm]	11.97" x 8.98" [304.1 mm x 228.0 mm]	
Weight	4.89 lb [2200g]	6.46 lb (2930g)	6.50 lb [2950g]
Screen Pixel	800 x 600 (SVGA)	1024 x 768 (XGA)	
Display Brightness	280 nits (typ)		
LCD Panel Dot Pitch	0.3075 mm x 0.3075 mm	0.297 mm x 0.297 mm	
Color Scale	65,536 colors		
Backlight Average Lifetime*	50,000 hours @ 25°C		
Touch Panel Type**	Four-wire analog resistive, single touch		
Project Memory	43MB		
Number of Screens	Up to 999 screens – limited by project memory		
Realtime Clock	Realtime clock built into panel, backed up for 30 days at 25°C		
Calendar – Month / Day / Year	Yes - monthly deviation 60sec (Reference)		
Serial Port 1	15-pin D-sub female – RS232C, RS-422/485		
Serial Port 2	3-wire terminal block – RS-485	N/A	3-wire terminal block – RS-485
Serial Port 3	RJ-12 modular jack – RS-232C	N/A	RJ-12 modular jack – RS-232C
USB Port – Type B	USB 2.0 High speed (480 Mbps) Type B – Download/Program – Max. cable length 15-feet		
USB Port – Type A	USB 2.0 High speed (480 Mbps) Type A – for USB device options – Max. cable length 15-feet – Bus Power – Less than 200mA at 5VDC		
Ethernet Port	10/100 Base-T, auto MDI/MDI-X		
Ethernet Port - Expansion Module	EA-ECOM	N/A	EA-ECOM
Audio Line Out	3.5 mm mini jack – requires amplifier and speaker(s)	N/A	3.5 mm mini jack – requires amplifier and speaker(s)
Mic In (Future)	3.5 mm mini jack	N/A	3.5 mm mini jack
SD Card Slot	2 slots support max 2GB (SD), max 32GB (SDHC)		
HDMI Video Out	HDMI Type A Port	N/A	HDMI Type A Port
HDMI Supported Resolution	800 x 600 (SVGA)	N/A	1024 x 768 (XGA)
Supply Power	10.2-26.4 VDC Class 2, Use Class2 and SELV (Safety Extra-Low Voltage) Circuit and Limited Energy Circuit (LEC), or use the AC/DC Power Adapter, EA-AC, to power the touch panel from a 100-240 VAC, 50/60 Hz power source. Reverse Polarity Protected		
Power Consumption	21.0 W 1.75 A @ 12VDC 0.88 A @ 24VDC	29.0 W 2.40 A @ 12VDC 1.20 A @ 24VDC	
Internal Fuse (non-replaceable)	6.3 A		
Altitude	Up to 2000m (6562ft)		
Operating Temperature	0 to 50°C (32 to 122°F) Maximum surrounding air temperature rating: 50°C (122°F) IEC 60068-2-14 (Test Nb, Thermal Shock)		
Storage Temperature	–20 to +60°C (–4 to +140°F) IEC 60068-2-1 (Test Ab, Cold) IEC 60068-2-2 (Test Bb, Dry Heat) IEC 60068-2-14 (Test Na, Thermal Shock)		
Humidity	5-95% RH (non-condensing)		
Environment	For use in Pollution Degree 2 environment, no corrosive gases permitted		
Noise Immunity	(EN61131-2), EN61000-4-2 (ESD), EN61000-4-3 (RFI), EN61000-4-4 (FTB), EN61000-4-5 (Serge), EN61000-4-6 (Conducted) EN61000-4-8 (Power frequency magnetic field immunity) (Local Test) RFI, (145MHz, 440Mhz 10W @ 10cm), Impulse 1000V @ 1µs pulse		
Withstand Voltage	1000VAC, 1min. (FG to Power supply)		
Insulation Resistance	> 10M ohm @ 500VDC (FG to Power supply)		
Vibration	IEC60068-2-6 (Test Fc)		
Shock	IEC60068-2-27 (Test Ea)		
Emission	EN55011 Class A (Radiated RF emission)		
Enclosure	NEMA 250 type 4/4X indoor use only UL50 type 4X indoor use only IP-65 indoor use only (When mounted correctly)		
Agency Approvals	UL508, E157382 CE (EN61131-2), RoHS (2011/65/EU) CUL Canadian C22.2		

NOTES: ****The backlight average lifetime is defined as the average usage time it takes before the brightness becomes 50% of the initial brightness. The lifetime of the backlight depends on the ambient temperature. The lifetime will decrease under low or high temperature usage.***
*****The touchscreen is designed to respond to a single touch. If it is touched at multiple points at the same time, an unexpected object may be activated.***

C-more 12" TFT Color Touch Panel - Full Model

EA9-T12CL

$1,545.00

C-more EA9 series touch screen interface panel, 12-inch color TFT (12.1 inch viewable screen), 64K colors, 800 x 600 pixel SVGA screen resolution, 800MHz CPU, 12-24 VDC powered, NEMA 4/4X, IP65 (when mounted correctly; for indoor use only), non-replaceable LED backlight. Includes (3) serial ports, USB 2.0 Type A and B ports and Ethernet port; supports (2) SD memory cards. Includes HDMI video out. Compatible with EA9-PGMSW programming software version 5.0 or later.

Features

- 12.1" diagonal color TFT (Thin Film Transistor) LCD display with 64K colors
- 800 x 600 pixel resolution
- 280 NITS display brightness
- 50,000 hour average backlight half-life
- Analog resistive (1024 X 1024) touch screen allowing unlimited touch areas
- USB port B (program/download) and USB port A (USB device options)
- Ethernet 10/100 Base-T port (program/download & PLC communication)
- Expansion Module Support
- Use EA-ECOM for second Ethernet Port
- Remote Internet access
- Serial PLC interface (RS-232/422/485)
- Two built-in SD memory card slots
- 12–24 VDC powered, 110VAC power adapter (optional)
- Audio Line Out, stereo - requires amplifier and speaker(s)
- HDMI video out
- 43MB project memory
- Data logging
- 0 to 50°C [32 to 122°F] operating temperature range
- NEMA 4/4X, IP65 compliant when mounted correctly, indoor use only
- Slim design saves panel space
- UL, cUL & CE agency approvals
- 2-year warranty from date of purchase

Function	*Available*
Ethernet	Yes
USB	Yes
SD Card	Yes
Audio Out	Yes
HDMI Video Out	Yes
Expansion Module	Yes

Dimensions

Units: inches [mm]

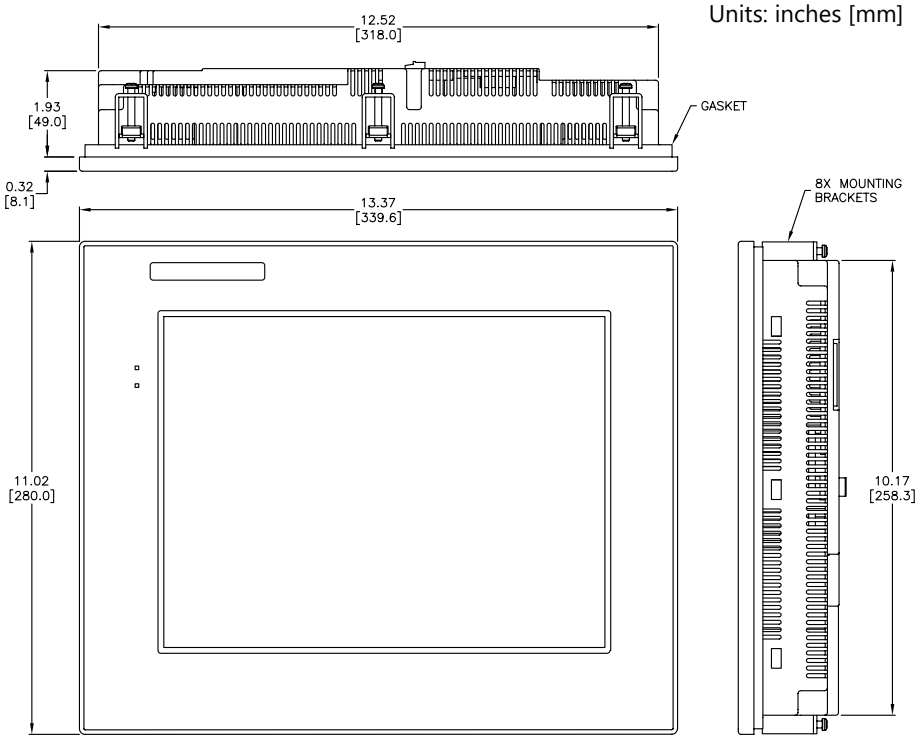

See our website www.AutomationDirect.com for complete engineering drawings.

Mounting Cutout

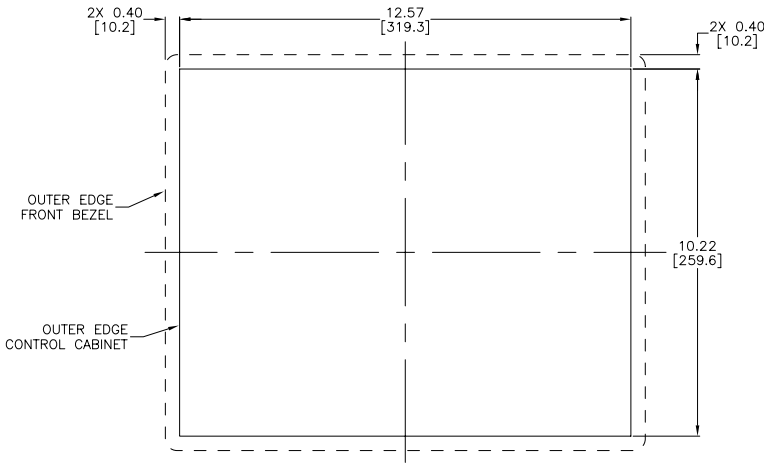

C-more Communication Ports

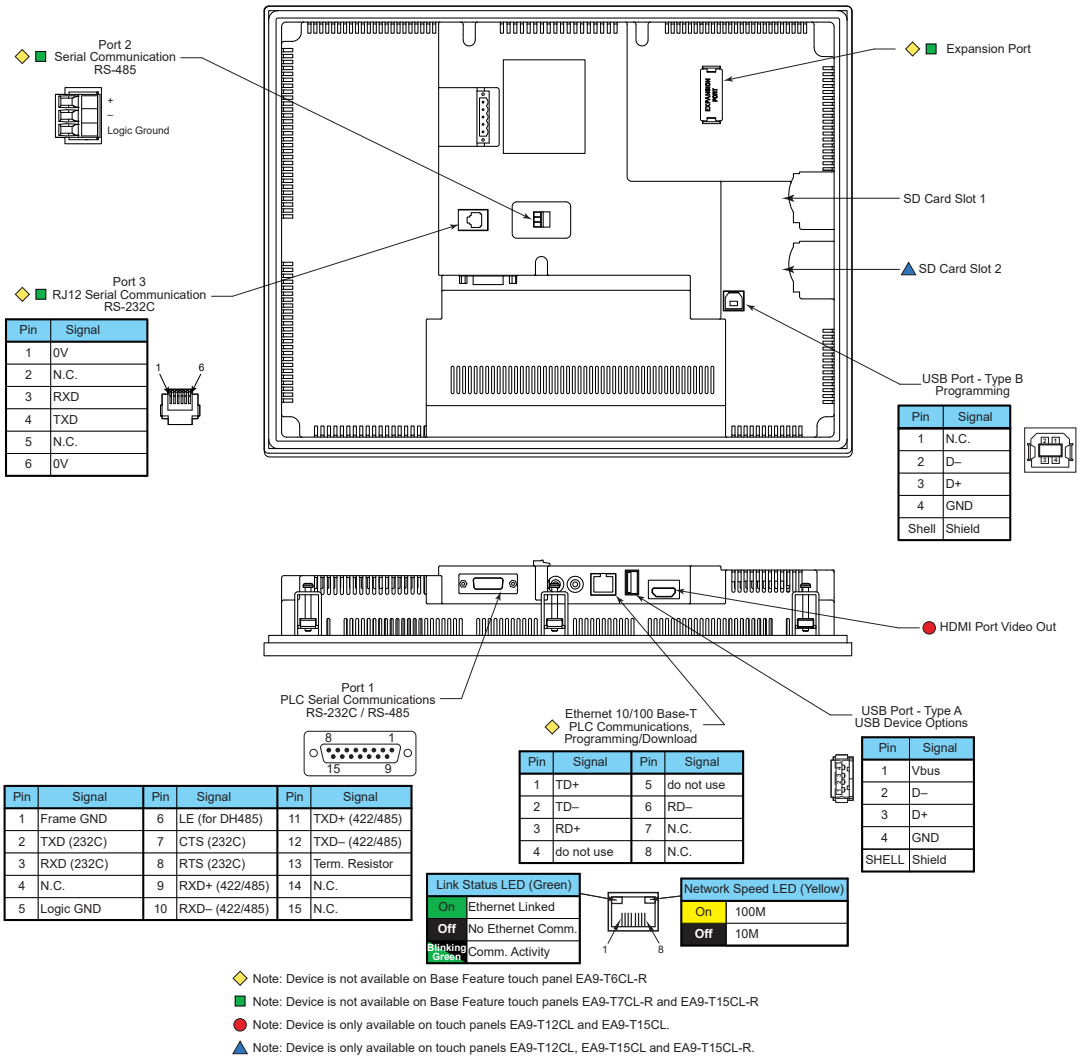

Pin	Signal
1	0V
2	N.C.
3	RXD
4	TXD
5	N.C.
6	0V

Pin	Signal
1	N.C.
2	D–
3	D+
4	GND
Shell	Shield

Pin	Signal	Pin	Signal	Pin	Signal
1	Frame GND	6	LE (for DH485)	11	TXD+ (422/485)
2	TXD (232C)	7	CTS (232C)	12	TXD– (422/485)
3	RXD (232C)	8	RTS (232C)	13	Term. Resistor
4	N.C.	9	RXD+ (422/485)	14	N.C.
5	Logic GND	10	RXD– (422/485)	15	N.C.

Pin	Signal	Pin	Signal
1	TD+	5	do not use
2	TD–	6	RD–
3	RD+	7	N.C.
4	do not use	8	N.C.

Pin	Signal
1	Vbus
2	D–
3	D+
4	GND
SHELL	Shield

◇ Note: Device is not available on Base Feature touch panel EA9-T6CL-R

■ Note: Device is not available on Base Feature touch panels EA9-T7CL-R and EA9-T15CL-R

● Note: Device is only available on touch panels EA9-T12CL and EA9-T15CL.

▲ Note: Device is only available on touch panels EA9-T12CL, EA9-T15CL and EA9-T15CL-R.

Ethernet Port

The Ethernet port has several uses:

- Download program to panel
- Communicate to PLCs/PCs
- Send e-mail
- Access FTP server
- Act as a Web server
- Remote Internet access

The Ethernet port has an RJ-45 8-wire modular connector with green and yellow LEDs.

- The yellow LED indicates network speed – off for a 10 Mbps connection and illuminated for a 100 Mbps connection.
- The green LED indicates link status and illuminates when a link is established.

Note: EA6-T6CL-R does not include an Ethernet port, and does not have these capabilities.

Expansion Port

The expansion port supports the EA-ECOM module to provide a second Ethernet Port for all full featured models.

USB Port B

Program ***C-more*** via the USB programming port. It's fast and easy, with no baud rate settings, parity, or stop bits to worry about. We stock standard USB cables for your convenience. USB Port B can be used to upload or download projects to and from a PC.

USB Port A

The Universal Serial Bus (USB) Port A is a standard feature on all models and can be used to connect various USB HID (Human Input Device) devices to the panel, such as the following:

- USB flash drives (USB-FLASH)
- USB keyboards
- USB barcode scanners
- USB card scanners

C-more can log data to the USB flash drive as well as load projects to the panel from the pen drive. You can also back up project files and panel firmware.

Sound Interface (Audio Line Out)

When attached to an amplifier and speaker(s), ***C-more*** can play warning sounds or pre-recorded messages such as: "conveyor is jammed". ***C-more*** supports WAV type files. The output is stereo.

Serial Port

Port 1 - Connect to your serial controller network via Port 1. Port 1 is a 15-pin port that supports RS-232 or RS-422/485.

Port 2 - Connect your RS-485 network via Port 2. Port 2 is provided with a 3-wire removable terminal block.

Port 3 - Connect to your RS-232C device via Port 3. Port 3 is an RJ12 connection.

HDMI Video Out

EA9-T12CL and EA9-T15CL include an HDMI Type A port to provide video output to a projector or remote monitor.

C-more Communication Protocols & Cables

Compatibility Table

PLC Family	Model		Protocols
Allen-Bradley	MicroLogix 1000, 1100, 1200, 1400, 1500, SLC 5-/01/02/03		DH485/AIC/AIC+
	MicroLogix 1000, 1100, 1200, 1400 and 1500		DF1 Half Duplex; DF1 Full Duplex
	SLC 5-/03/04/05		
	ControlLogix™, CompactLogix™, FlexLogix™		
	PLC-5		DF1 Full Duplex
	ControlLogix, CompactLogix, FlexLogix - Tag Based		DF1 Half Duplex; DF1 Full Duplex
	ControlLogix, CompactLogix, FlexLogix - Generic I/O Messaging		EtherNet/IP Server
	ControlLogix, CompactLogix, FlexLogix - Tag Based		EtherNet/IP Client
	Micrologix 1100, 1400 & SLC5/05, all via native Ethernet port		
	MicroLogix 1000, 1100, 1200, 1400,1500 & SLC 5-03/04/05, all via ENI Adapter		
	Micro 800 series		Modbus RTU
			Modbus TCP
	Micro 800 series - Tag Based		DF1 Full Duplex
			EtherNet/IP Client
Modbus RTU	Modbus RTU devices		Modbus RTU
Modbus TCP/IP	Modbus TCP/IP devices		Modbus TCP/IP
GE	90/30, 90/70, Micro 90, VersaMax Micro		SNPX
	90/30, Rx3i		SRTP Ethernet
Mitsubishi	FX Series		FX Direct
	Q02, Q02H, Q06H, Q12H, Q25H		Q CPU
	Q, QnA Serial		QnA Serial
	Q, QnA Ethernet		QnA Ethernet
Omron	C200 Adapter, C500		Host Link
	CJ1/CS1 Serial, CJ1/CS1 Ethernet		FINS
Modicon	984 CPU, Quantum 113 CPU, AEG Modicon Micro Series 110 CPU: 311-xx, 411-xx, 512-xx, 612-xx		Modbus RTU
Siemens	S7-200 CPU, RS-485 Serial		PPI
	S7-200 CPU, S7-300 CPU, S7-400, S7-1200 CPU, S7-1500; Ethernet		Ethernet ISO over TCP
Productivity Series	all		Productivity Serial
			Productivity Ethernet
Do-more	all		Do-more Serial
			Do-more Ethernet
CLICK	all		Modbus (CLICK addressing)
			Modbus TCP (CLICK addressing)
Direct LOGIC	DL05/DL06	all	K-Sequence
			DirectNET
			Modbus (Koyo addressing)
		H0-ECOM/H0-ECOM100	Direct LOGIC Ethernet
	DL105	all	K-Sequence
	DL205	D2-230	K-Sequence
		D2-240	K-Sequence
			DirectNET
		D2-250/D2-250-1/D2-260/ D2-262	K-Sequence
			DirectNET
			Modbus (Koyo addressing)
		D2-240/D2-250-1/D2-260 using D2-DCM	DirectNET
			Modbus (Koyo addressing)
		H2-ECOM/H2-ECOM100	Direct LOGIC Ethernet
	DL305	D3-330/330P (Requires the use of a Data Communications Unit)	DirectNET
		D3-340	DirectNET
		D3-350	K-Sequence
			DirectNET
			Modbus (Koyo addressing)
		D3-350 using D3-DCM	DirectNET
			Modbus (Koyo addressing)
	DL405	D4-430	K-Sequence
			DirectNET
		D4-440	K-Sequence
			DirectNET
		D4-450/D4-454	K-Sequence
			DirectNET
			Modbus (Koyo addressing)
		All with D4-DCM	DirectNET
			Modbus (Koyo addressing)
		H4-ECOM/H4-ECOM100	Direct LOGIC Ethernet
	H2-WinPLC (Think & Do) Live V5.2 or later and Studio any version		Think & Do Modbus RTU (serial port)
	H2-WinPLC (Think & Do) Live V5.5.1 or later and Studio V7.2.1 or later		Think & Do Modbus TCP/IP (Ethernet port)

Cable Description	Cable Part Number	Price
AutomationDirect communication cable, 15-pin male D-sub to 6-pin RJ12, shielded, 9.8ft/3m cable length. For use with ***C-more*** or ***C-more*** Micro panel and AutomationDirect PLCs with RJ12 ports.	***EA-2CBL***	$31.00
AutomationDirect communication cable, 15-pin male D-sub to 15-pin D-sub HD15 male, shielded, 3m/9.8ft cable length. For use with ***C-more*** or ***C-more*** Micro panel and a DL06, D2-250(-1), D2-260 or D2-262 (bottom port) CPU.	***EA-2CBL-1***	$31.50
AutomationDirect communication cable, 15-pin male D-sub to 4-pin RJ11, shielded, 3m/9.8ft cable length. For use with ***C-more*** or ***C-more*** Micro panel and a D3-340 CPU top or bottom port.	***EA-3CBL***	$31.00
AutomationDirect communication cable, 15-pin male D-sub to 15-pin male D-sub, shielded, 3m/9.8ft cable length. For use with ***C-more*** or ***C-more*** Micro panel and a DL405 (top port) CPU.	***EA-4CBL-1***	$31.00
AutomationDirect communication cable, 15-pin male D-sub to 25-pin male D-sub, shielded, 3m/9.8ft cable length. For use with ***C-more*** or ***C-more*** Micro panel and a D2-DCM, D3-232-DCU, D3-350 (bottom port) or DL405 (bottom port) CPU.	***EA-4CBL-2***	$32.00
AutomationDirect communication cable, 15-pin male D-sub to 8-pin male mini DIN, shielded, 3m/9.8ft cable length. For use with ***C-more*** or ***C-more*** Micro panel and an Allen-Bradley Micrologix CPU.	***EA-MLOGIX-CBL***	$47.50
AutomationDirect communication cable, 15-pin male D-sub to 9-pin female D-sub, shielded, 3m/9.8ft cable length. For use with ***C-more*** or ***C-more*** Micro panel and an Allen-Bradley SLC 5/03, 5/04 or 5/05 CPU with DF-1 port.	***EA-SLC-232-CBL***	$31.00
AutomationDirect communication cable, 15-pin male D-sub to 25-pin male D-sub, 3m/9.8ft cable length. For use with ***C-more*** or ***C-more*** Micro panel and an Allen-Bradley PLC-5 CPU with a DF1 port.	***EA-PLC5-232-CBL***	$31.00
AutomationDirect communication cable, 15-pin male D-sub to 6-pin RJ45, shielded, 3m/9.8ft cable length. For use with ***C-more*** or ***C-more*** Micro panel and an Allen-Bradley SLC 5/01, 5/02 or 5/03 CPU with a DH485 port cable.	***EA-DH485-CBL***	$30.50
AutomationDirect communication cable, 15-pin male D-sub to 15-pin male D-sub, shielded, 3m/9.8ft cable length. For use with ***C-more*** or ***C-more*** Micro and GE Fanuc Series 90/30 or 90/70 serial port.	***EA-90-30-CBL***	$31.00
AutomationDirect communication cable, 15-pin male D-sub to 25-pin male D-sub, 3m/9.8ft cable length. For use with ***C-more*** or ***C-more*** Micro panel and a Mitsubishi FX Series CPU.	***EA-MITSU-CBL***	$31.00
AutomationDirect communication cable, 15-pin male D-sub to 8-pin male mini DIN, shielded, 3m/9.8ft cable length. For use with ***C-more*** or ***C-more*** Micro panel and a Mitsubishi FX Series CPU.	***EA-MITSU-CBL-1***	$31.00
AutomationDirect communication cable, 15-pin male D-sub to 25-pin male D-sub, shielded, 3m/9.8ft cable length. For use with ***C-more*** or ***C-more*** Micro panel and an Omron C200 or C500 CPU.	***EA-OMRON-CBL***	$31.00

Example Cables:

EA-2CBL

EA-2CBL-1

C-more Computer Programming Connections

Using the ***C-more*** Programming Software EA9-PGMSW for project development, the HMI can be connected to a PC (personal computer) in one of several ways:

- Connect a USB Programming Cable such as (USB-CBL-AB15) from a USB port type A on the PC to the USB type B programming port on the ***C-more*** HMI. The USB connection is for direct connection only and does not support USB hubs.
- Connect the ***C-more*** HMI to a PC with a Cat5 Ethernet cable via an Ethernet switch. Multiple ***C-more*** HMIs can be programmed in this configuration.

Following are the minimum system requirements for running ***C-more*** Programming Software, p/n EA9-PGMSW, on a PC:

- USB or Ethernet connection to HMI (cables sold separately).
- Windows operating system - see automationdirect.com for specific operating system requirements.

NOTE: Regarding Ethernet access to a C-more HMI.
If you intend to take advantage of the methods of remote access to the HMI, including the web server, PC remote access, FTP, iPhone or iPad app, you need to consider the security exposure in order to minimize the risks to your process and your C-more HMI.

Security measures may include password protection, changing the ports exposed on your network, including a VPN in your network, and other methods. Security should always be carefully evaluated for each installation.

USB Programming Cable

Part No. USB-CBL-ABxx

USB Programming Cables		
Part Number	***Length***	***Price***
USB-CBL-AB3	3 feet	$12.00
USB-CBL-AB6	6 feet	$16.00
USB-CBL-AB10	10 feet	$36.50
USB-CBL-AB15	15 feet	$42.50

Stride® Ethernet Switch

USB Connectivity

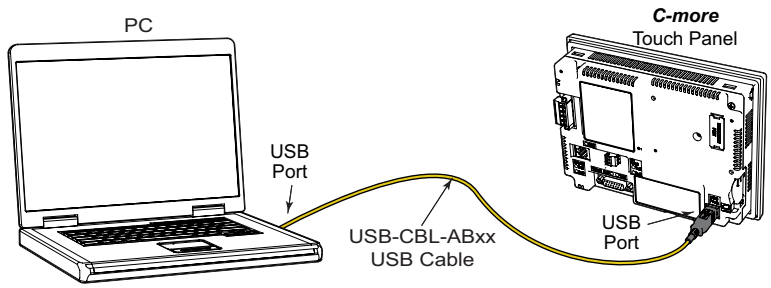

Ethernet Connectivity via a Hub or Switch

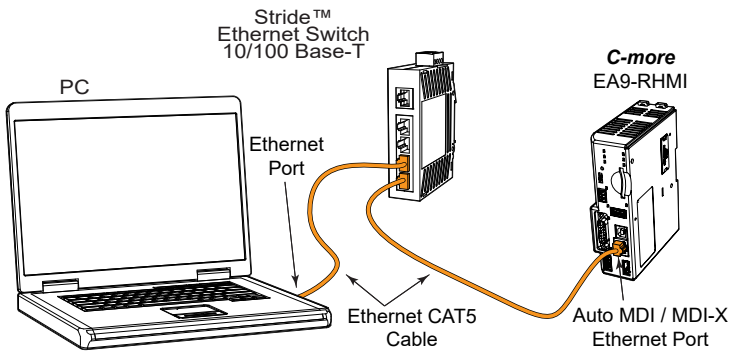

Ethernet Direct Connection

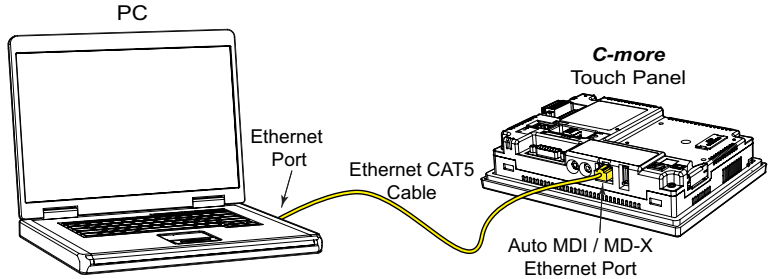

C-more Accessories

Accessories

C-more touch panels can be enhanced with the accessories below:

Part Number	Description	Price
EA-AC	***C-more*** AC/DC power adapter, 24 VDC, 1.5A. For use with ***C-more*** EA7 and EA9 series touch panels.	$98.00
EA-6-COV2	***C-more*** screen protector, non-glare, 6in. Package of 3. For use with ***C-more*** and ***C-more*** Micro 6in HMIs.	$49.50
EA-7-COV2	***C-more*** screen protector, non-glare, 7in. Package of 3. For use with ***C-more*** 7in HMIs.	$51.00
EA-8-COV2	***C-more*** screen protector, non-glare, 8in. Package of 3. For use with ***C-more*** and ***C-more*** Micro 8in HMIs.	$53.00
EA-10-COV2	***C-more*** Micro screen protector, non-glare, 10in. Package of 3. For use with ***C-more*** EA9-T10CL and ***C-more*** Micro EA3-T10CL HMIs.	$59.00
EA-10W-COV2	***C-more*** screen protector, non-glare, 10in. Package of 3. For use with ***C-more*** EA9-T10WCL widescreen HMI.	$59.00
EA-12-COV2	***C-more*** screen protector, non-glare, 12in. Package of 3. For use with ***C-more*** 12in HMIs.	$61.00
EA-15-COV2	***C-more*** screen protector, non-glare, 15in. Package of 3. For use with ***C-more*** 15in HMIs.	$72.00
EA-ECOM	***C-more*** communication expansion module, (1) RJ45 10/100 Mbps Ethernet port. For use with ***C-more*** Micro EA3 series 6in, 8in and 10in panels and all ***C-more*** HMIs except CM5 series and -R models.	$73.00
EA-COMCON-3	***C-more*** DSUB port adapter, 15-pin male to 6-pole RS-422/485 terminal block, right angle cable entry. For use with ***C-more*** Micro EA1 series 4in and 6in HMIs, ***C-more*** Micro EA3 series 3in, 4in, and 6in HMIs, ***C-more*** EA9 6in and 7in HMIs and ***C-more*** CM5 series 4in HMI.	$55.00
EA-COMCON-3A	***C-more*** Micro DSUB port adapter, 15-pin male to 6-pole RS-422/485 terminal block, straight cable entry. For use with ***C-more*** Micro EA1 3in with EA1-MG-SP1, EA3 8in and 10in HMIs, ***C-more*** EA9 8in, 10in, 12in and 15in and CM5 7in, 10in, 12in, 15in and 22in HMIs.	$30.50
EA-SD-CARD	***C-more*** industrial memory card, 2GB SD. For use with all products with SD memory card slot.	$130.00
USB-FLASH	SanDisk USB Flash drive, 32GB.	$25.50

Accessory Locations

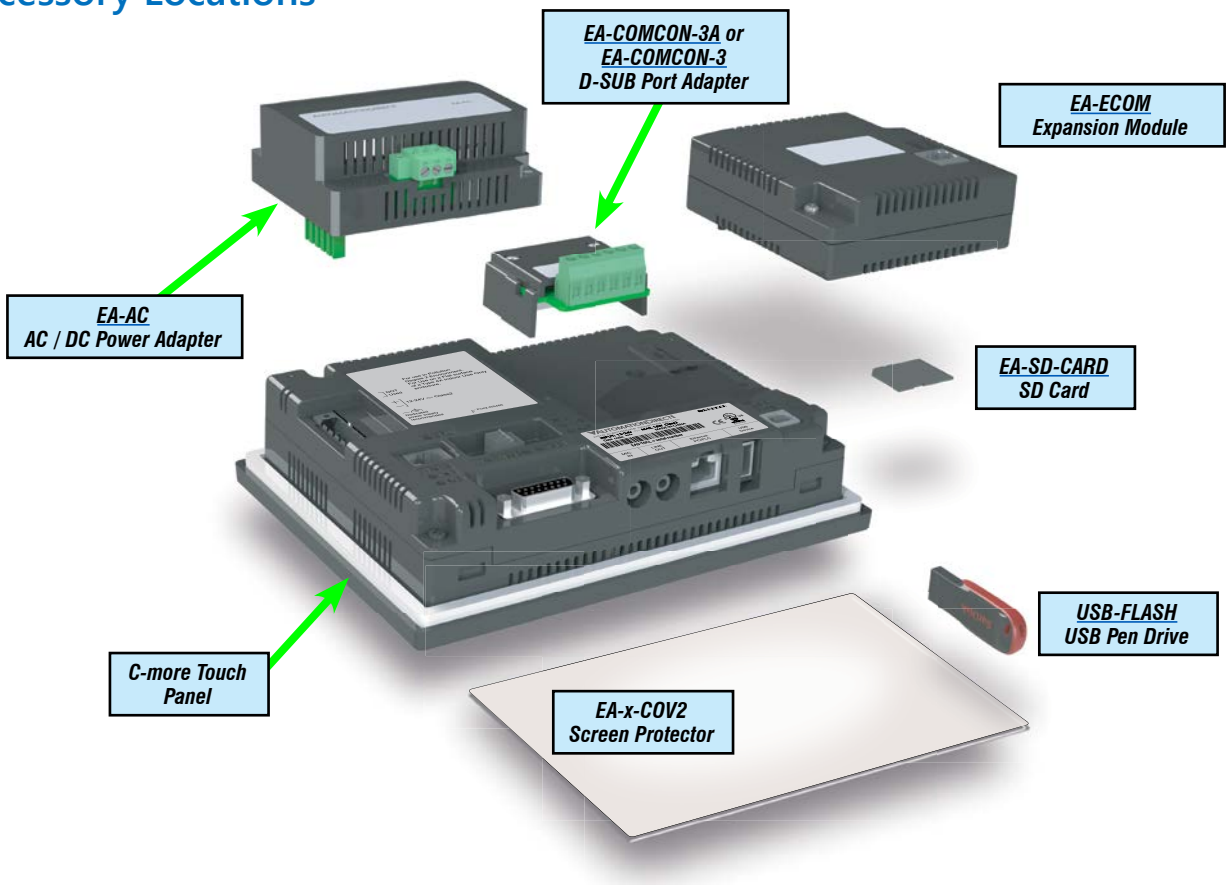

C-more Accessories

AC/DC Power Adapter

The optional ***C-more*** AC/DC Power Adapter can be used to power the ***C-more*** touch panels from a 100-240 VAC, 50/60 Hertz, voltage source. The adapter provides 24VDC @ 1.5 A to the touch panel's DC power connector and can be conveniently secured to the touch panel with two captive screws. The adapter provides a power loss signal to the touch panel that causes the touch panel to stop writing data to SD memory devices providing a controlled shutdown for increased data logging reliability. EA-AC is not compatible with EA9-RHMI.

Part No. EA-AC $98.00

Overall Panel Depth w/ EA-AC Installed

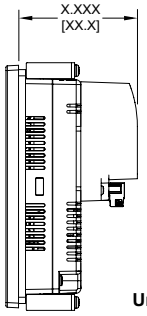

EA9-T6CL-R = 2.99 [75.9]
EA9-T6CL = 2.99 [75.9]
EA9-T7CL-R = 2.99 [75.9]
EA9-T7CL = 2.99 [75.9]
EA9-T8CL = 3.51 [89.2]
EA9-T10CL = 3.51 [89.2]
EA9-T10WCL = 3.51 [89.2]
EA9-T12CL = 3.35 [85.1]
EA9-T15CL-R = 3.35 [85.1]
EA9-T15CL = 3.35 [85.1]

Units: inches[mm]

Dimensions

Units: inches [mm]

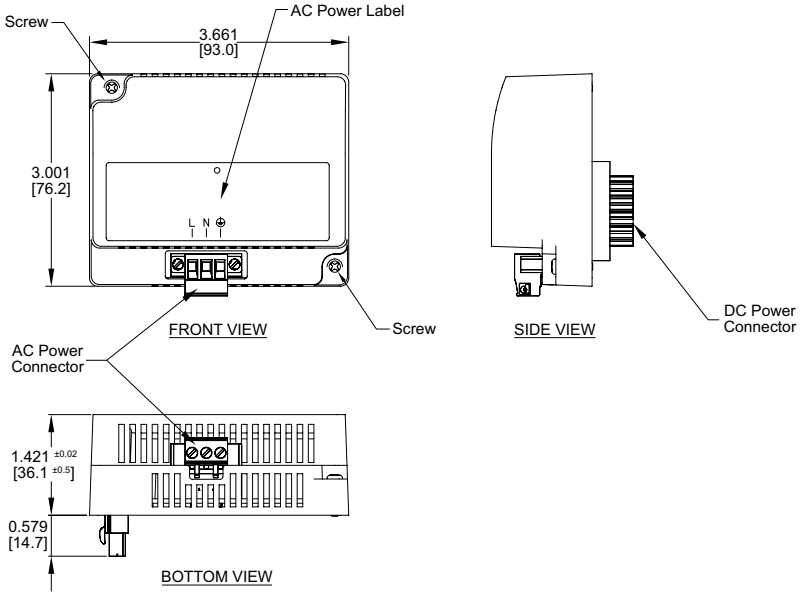

AC/DC Power Adapter Specifications			
Part Number	EA-AC	***Short Circuit Protection***	85VAC: 2.6 A, 100VAC: 2.8 A, 264VAC: 3.9 A
Input Voltage & Frequency	100-240 VAC +10% -15%; 50/60 Hertz	***Static Electricity Discharge Resistance***	Compliant with IEC61000-4-2, Contact: 4 kV, Air: 8 kV
Wire	24-14 AWG, 60 / 75°C Copper. Tighten to 72 oz-in (0.5 Nm)	***Agency Approvals***	UL508 - UL Recognized for use with ***C-more*** panels, cUL, CE, EMC EN61132-2
Permissible Momentary Power Failure	Within 40ms	***Environment***	For use in pollution degree 2 environment
Input Power	68VA or less	***Grounding***	Ground resistance: less than 100 ohm
Operating Temperature Range	0°C to 50°C [32 to 122°F] Maximum surrounding temperature rating, 50°C	***Dimensions - inches [mm]***	3.00" (H) x 3.66" (W) x 1.42" (D) [76.2 mm x 93.0 mm x 36.1 mm] (Excluding DC Power Connector.)
Storage Temperature Range	-20 to 60°C [-4 to 140°F]	***Weight***	6.13 oz. [175 g]
Operating & Storage Humidity	10-85% RH (non-condensing)	***Cooling Method***	Natural convection
Noise Immunity	1000VAC p-p (Pulse width 1 µs, rise time: 1 ns), with proper ground connection on AC terminal block.	***Removable AC Power Connector (included)***	EA-AC-CON or DECA Switchlab MC101-508-03G Secured with (2) captive M2.5 screws, torque to 70 oz-in [0.5 Nm]
Hi-Pot	1000VAC, 1 minute, with proper ground connection on AC terminal block.	***Output Voltage and Ripple***	21.6 - 26.4 VDC, Ripple < 100 mV p-p
Insulation Resistance	500VDC, 10 M ohm or above, with proper ground connection on AC terminal block.	***Output Current***	Maximum 1.5 A
Vibration	Compliant with IEC61131-2	***Inrush Current***	For 100VAC: 15A, 3ms or less For 240VAC: 20A, 3ms or less
Shock	Pulse shape: Sine half wave, Peak acceleration: 147 m/s² (15 G), X, Y, Z: 3 directions, 2 times each	***Mounting to Touch Panel***	Secure with (2) spring loaded captive M3-20 screws, torque to 50 oz-in [0.35 Nm]
Thermal Protection	140°C [284°F], with autorecovery	***Recommended External Fuse***	3.0A (ADC p/n: MDL3)

C-more Accessories

SD Card

EA-SD-CARD

$130.00

SD memory card for non-volatile storage, 2GB industrial grade, 70° C maximum operating temperature makes it suitable for data logging in industrial applications. Recommended for ***C-more*** EA9 series. The EA-SD-CARD utilizes SLC technology so it is the fastest option for writing and storing data. If logged data is saved to external memory, AutomationDirect recommends using an EA-SD-CARD. EA-SD-CARD may be used with all products with an SD card slot.

SLC Flash memory utilized by EA-SD-CARD has the advantage of being the most accurate flash memory type when reading and writing data. SLC Flash has the longest lifespan of flash types and can operate in a broader temperature range than other types.

EA-SD-CARD with SLC Flash memory is recommended for industrial workloads that require heavy read / write cycles.

EA-SD-CARD Specifications	
Operating Temperature	0 to 70°C (32 to 158°F)
Humidity	20 to 85% (non-condensing)
Capacity	2GB
Speed Modes	High-Speed Normal-Speed
Interface	SD Memory Card Specification Ver. 3.0
Speed Class	Class 6

USB Flash Drive

USB-FLASH

$25.50

USB flash drive for non-volatile storage, 32GB. Recommended for the ***C-more*** EA9 series touch panels.

C-more Accessories

D-SUB 15-pin to Terminal Block Adapter - Right Angle

The EA-COMCON-3 adapter plugs into the 15-pin serial port on the rear of a panel to allow wire terminal connections for an RS-422/RS-485 communication cable. Compatible with all ***C-more*** EA7 series panels, EA9-T6CL(-R) and EA9-T7CL(-R) panels, CM5-T4W and ***C-more*** Micro 4" and 6" panels. EA-COMCON-3 is UL Recognized

Part No.
EA-COMCON-3

$55.00

Dimensions

Units: inches [mm]

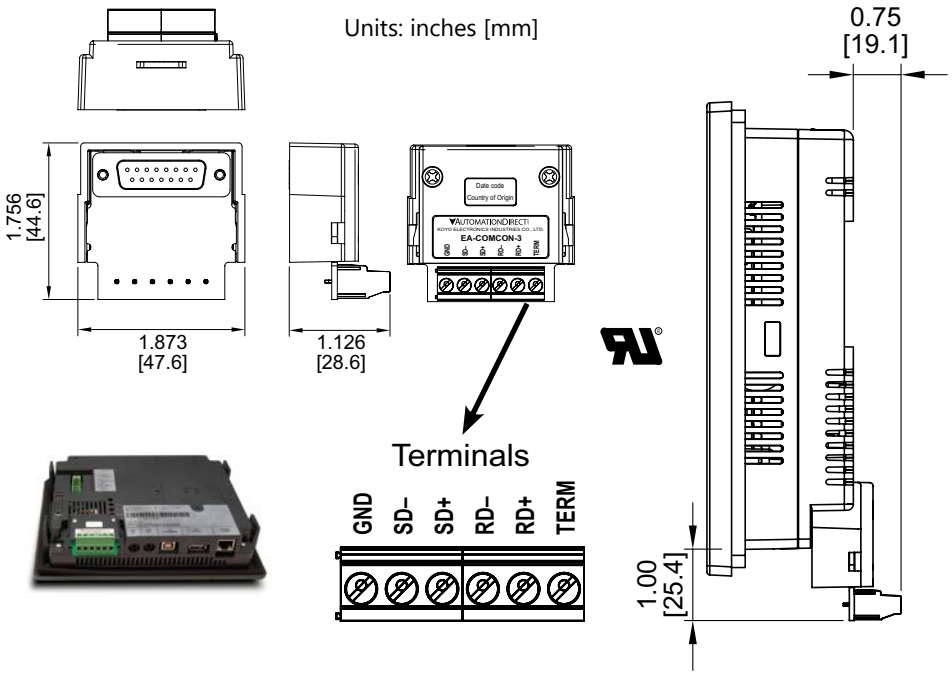

D-SUB 15-pin to Terminal Block Adapter - Straight Through

The EA-COMCON-3A adapter plugs into the 15-pin serial port on the rear of a panel to allow wire terminal connections for an RS-422/RS-485 communication cable. Compatible with ***C-more*** EA9 series panels, EA9-RHMI, CM5-T7W, CM5-T10W, CM5-T12W, CM5-T15W, CM5-T22W, ***C-more*** Micro EA3-T8CL and EA3-T10CL panels and EA1-S3x with EA1-MG-SP1. Not compatible with EA9-T6CL(-R) and EA9-T7CL(-R) panels. The EA-COMCON-3A is not UL recognized or listed.

Part No.
EA-COMCON-3A

$30.50

Dimensions

Units: inches [mm]

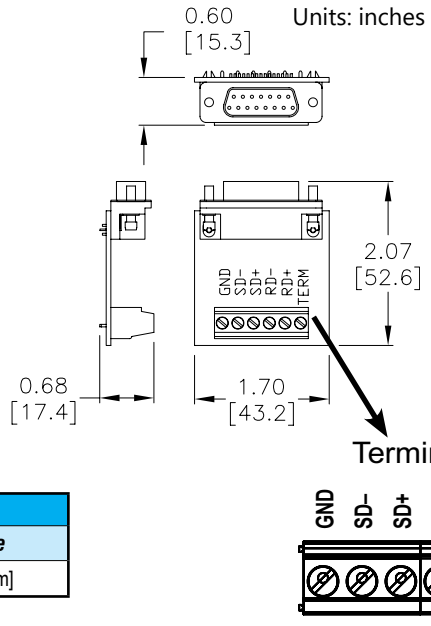

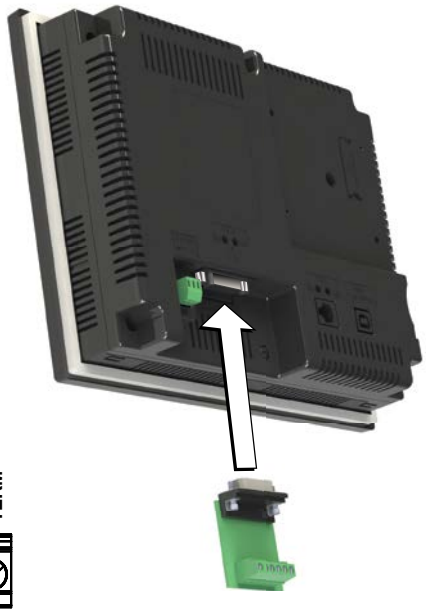

EA-COMCON-3(A) Wiring Specs	
Wire Size	***Screw Torque***
14-24 AWG	4.4 lb-in [0.5 Nm]

C-more Accessories

Non-glare Screen Covers (in packages of 3)

The non-glare screen covers are protective overlays used to protect the touch screen while helping to reduce the glare from external light sources.

Part Numbers: EA-6-COV2, EA-7-COV2, EA-8-COV2, EA-10-COV2, EA-10W-COV2, EA-12-COV2 and EA-15-COV2

EA-6-COV2	$49.50
EA-7-COV2	$51.00
EA-8-COV2	$53.00
EA-10-COV2	$59.00
EA-10W-COV2	$59.00
EA-12-COV2	$61.00
EA-15-COV2	$72.00

Dimensions

Units: inches [mm]

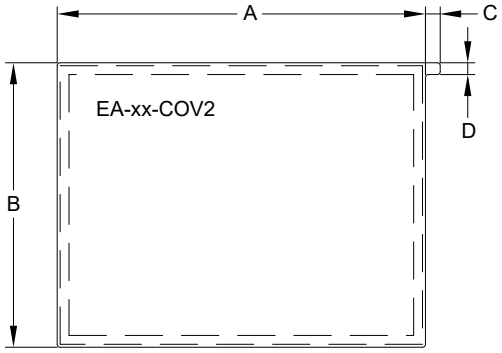

Non-glare Screen Covers Dimensions - inches [mm]				
Part Number	A	B	C	D
EA-6-COV2	4.91 [124.8]	3.80 [96.4]	0.197 [5.0]	0.157 [4.0]
EA-7-COV2	6.40 [162.6]	4.00 [101.5]		
EA-8-COV2	7.32 [185.8]	5.44 [138.2]		
EA-10-COV2	8.91 [226.2]	6.61 [168.0]		
EA-10W-COV2	9.23 [234.5]	5.38 [136.7]		
EA-12-COV2	10.10 [256.5]	7.64 [194.1]		
EA-15-COV2	12.56 [319.1]	9.37 [238.1]		

Installation

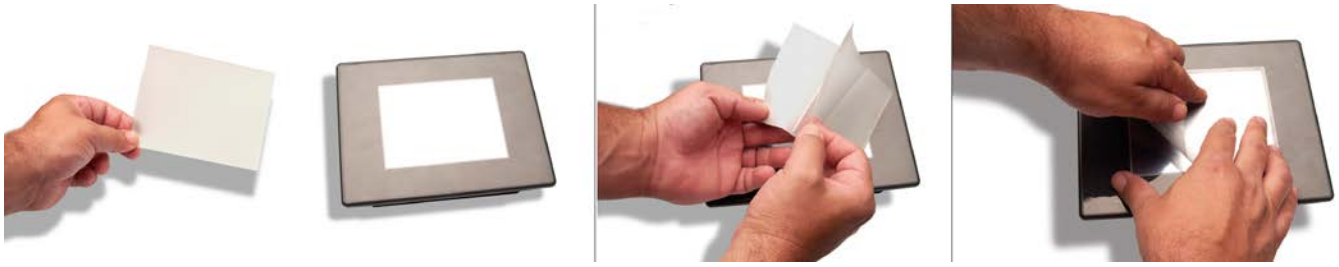

NOTE: The Protective Cover ships with a thin protective sheet on the face of the cover that needs to be carefully removed. If your panel is not clear, the protective sheet may not have been removed.

Communication Expansion Module

EA-ECOM Ethernet Communication Module

The EA-ECOM communication module is compatible with EA3 series ***C-more*** Micro 6-inch, 8-inch and 10-inch panels and most ***C-more*** panels. It adds an Ethernet (RJ45) port for programming and PLC communications at 10/100 Mbps. ***C-more*** Micro Software and firmware version 4.0 or later is required. ***C-more*** Software and firmware version 6.50 or later is required.

Part No. EA-ECOM $73.00

Ethernet Communication Interface Specifications	
Standard Specification	Conforms to IEEE802.3
Communication Speed	10/100 Base-T (Automatic Negotiation)
Cable Specification	Category 5
Auto MDI / MDI-X	Yes
Connector Type	RJ45

Communication Drivers	
C-more	***C-more Micro***
Supports all ***C-more*** Ethernet drivers	AutomationDirect Productivity Series Ethernet
	AutomationDirect Do-more / BRX Ethernet
	AutomationDirect CLICK Ethernet
	AutomationDirect ECOM Ethernet
	Modbus TCP/IP
	Allen-Bradley EtherNet/IP (Client) SLC5/05
	Allen-Bradley EtherNet/IP (Client) ENI Adapter
	Allen-Bradley EtherNet/IP (Client) MicroLogix 1100/1400
	Allen-Bradley EtherNet/IP (Client) control/CompactLogix (SLC Mapping only)

Dimensions

Units: inches [mm]

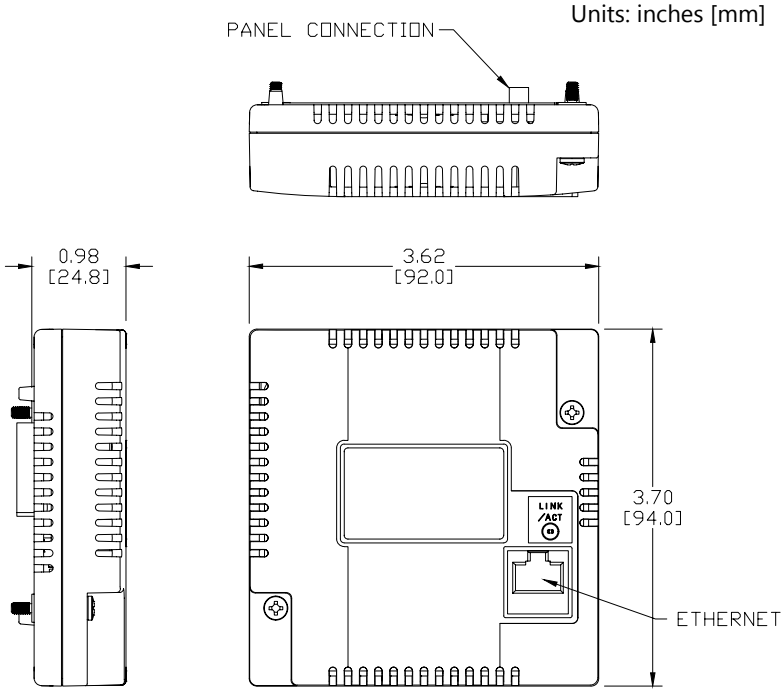

Link Status LED (Green)	
On	Ethernet Linked
Off	No Ethernet Comm.
Blinking Green	Comm. Activity

EA-ECOM Specifications	
Part Number	***EA-ECOM***
Operating Temperature	0 to 50 °C (32 to 122 °F) Maximum surrounding air temperature rating: 50 °C
Storage Temperature	–20 to +60 °C (–4 to +140 °F)
Humidity	5–95% RH (non-condensing)
Environmental Air	For use in pollution degree 2 environment
Vibration	IEC60068-2-6 (Test Fc), 5-9 Hz: 3.5 mm amplitude, 9-150 Hz: 1.0G, sweeping, at a rate of 1 octave/min. (±10%), 10 sweep cycles per axis on each of 3 mutually perpendicular axes
Shock	IEC60068-2-27 (Test Ea), 15 G peak, 11ms duration, three shocks in each direction per axis, on 3 mutually perpendicular axes (total of 18 shocks)
Noise Immunity	NEMA ICS3-304 RFI, (145 MHz, 440 MHz 10 W @ 10 cm) Impulse 1000 V @ 1 µs pulse
Emission	EN55011 Class A (Radiated RF emission)
Enclosure (panel door installation)	NEMA 250 type 4/4X indoor use only UL50 type 4X indoor use only IP-65 indoor use only (When mounted correctly)
Agency Approvals	CE (EN61131-2), UL508, CUL Canadian C22.2 To obtain the most current agency approval information, see the Agency Approval Checklist section on the specific part number's web page
Mounting Torque	50 oz·in [0.35 N·m]
Weight	0.23 lb [105g]

C-more Replacement Parts

These replacement parts can be used to replace damaged, worn or lost ***C-more*** components.

Replacement parts at a glance:

Part Number	Price		Description
EA9-BRK	$36.00		***C-more*** panel mounting brackets, replacement. Package of 8. For use with ***C-more*** EA9 series touch panels.
EA9-LBL	$32.00		***C-more*** blank label insert, replacement. Package of 10. For use with ***C-more*** EA9 series HMI front bezel.
EA9-3TB	$12.50		***C-more*** pluggable terminal block, replacement, 3-pole. Package of 2. For use with 3-wire RS485 communications port on ***C-more*** EA9 series panels.
C0-4TB	$10.00		CLICK terminal blocks, replacement, 4-pole. Package of 2. For use with CLICK PLCs, ***C-more*** CM5 series HMIs and ***C-more*** EA9-RHMI.
EA-DC-CON	$19.00		***C-more*** DC 5-terminal power connector, replacement. For use with ***C-more*** EA7 and EA9 series touch panels.
EA-AC-CON	$10.00		***C-more*** AC 3-terminal power connector, replacement. For use with ***C-more*** AC adapter (p/n EA-AC).
EA9-15-GSK	$34.00	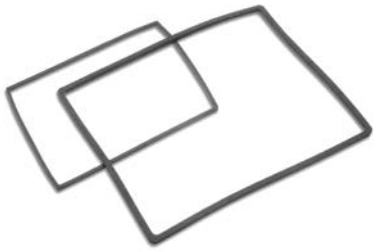	***C-more*** panel mounting gasket, replacement. For use with ***C-more*** EA9 series 15in HMIs.
EA9-12-GSK	$27.50		***C-more*** panel mounting gasket, replacement. For use with ***C-more*** EA9-T12CL 12in touch panel.
EA9-10W-GSK	$26.50		***C-more*** panel mounting gasket, replacement. For use with ***C-more*** EA9-T10WCL 10in HMI.
EA9-10-GSK	$26.50		***C-more*** panel mounting gasket, replacement. For use with ***C-more*** EA9-T10CL 10in HMI.
EA9-8-GSK	$23.00		***C-more*** panel mounting gasket, replacement. For use with ***C-more*** EA9-T8CL 8in touch panel.
EA9-6-GSK	$21.00		***C-more*** panel mounting gasket, replacement. For use with ***C-more*** EA9 series 6in and 7in touch panels.