Accessories

Plug p/n 284200-00

Plug p/n 284040-00

Applications

Pressure differentials in enclosures with a high degree of protection are a result of internal and external temperature changes. In the case of negative pressure or partial vacuum, dust and humidity can enter the enclosure through the door seal. When the air inside the enclosure cools down, condensation may occur because the humidity cannot escape the enclosure.

These plugs allow for controlled pressure compensation due to temperature variations. Even with a slight overpressure, a waterproof membrane inside the plug allows the humidity to escape whilst blocking water and dirt from entering the enclosure.

Features

- Nickel plated aluminum or plastic
- Easy installation
- High reliability
- Allows for controlled pressure compensation

Pressure Compensation Plugs

Part Number	Price	Size	Material	Thread Size	IP Rating	Drawing Links
284040-00	$25.50	17mm	Nickel plated aluminum	M12 x 1.5	IP67	PDF
284200-00	$12.00	70mm	Plastic	M40 x 1.5	IP66 IPX9K	PDF

Enclosure Heating and Heater Selection

Why Heat an Enclosure?

Today's miniaturization of enclosure components results in high packing densities, which in turn results in higher temperatures within the enclosure. These high temperatures are harmful to electronic components. In response, cooling systems have become standard in many applications. However, just as critical and widely underestimated, are failures caused by the formation of moisture.

Under certain climatic conditions, moisture can build up not only in outdoor or poorly insulated enclosures, but also in highly protected and well-sealed enclosures.

Moisture and Failure

Moisture, especially when combined with aggressive gases and dust, causes atmospheric corrosion and can result in the failure of components such as circuit breakers, busbars, relays, integrated circuit boards and transformers. The greatest danger lies in conditions where electronic equipment is exposed to relatively high air humidity or extreme variations in temperature, such as day-and-night operation or outdoor installation. Failure of components in such cases is usually caused by changing contact resistances, flashovers, creepage currents or reduced insulation properties.

Eliminate Moisture

Moisture and corrosion will remain low if relative air humidity stays below 60%. However, relative humidity above 65% will significantly increase moisture and corrosion problems. This can be prevented by keeping the environment inside an enclosure at a temperature as little as 9°F (5°C) higher than that of the ambient air. Constant temperatures are a necessity to guarantee optimal operating conditions. Continuous temperature changes not only create condensation but they reduce the life expectancy of electronic components significantly. Electronic components can be protected by cooling during the day and heating at night.

Thermal Management

Modern enclosure heaters are designed to protect against condensation. They heat the air inside enclosures, preventing water vapor from condensing on components while providing the greatest possible air circulation and low energy consumption.

Other heating element technology improvements include:

- Longer operating life
- Greater energy efficiencies
- Quick wiring options
- Easier mounting
- Fan heaters should be considered for larger enclosures to ensure that the entire enclosure is heated uniformly

Heater Location

Ideally, most heaters will perform optimally when mounted near the bottom of an enclosure and used in conjunction with a control device, thermostat, and/or hygrostat. The control device may be a separate device, or it may be integral to the heater. With the controller located in an area of the cabinet that is representative of the average temperature or humidity requirement, the heater should then be placed in a position near the bottom of the enclosure. If a separate control device is used, the heater should not be located directly beneath the controller to ensure that the controller is not influenced by direct heat from the heater.

Heater Calculation

Follow Steps 1-5 to determine the heating requirement of an enclosure (US units - left column, metric - right)

STEP 1: Determine the Surface Area (A) of your enclosure which is exposed to open air.

Enclosure Dimensions:

height =_____feet _____meters

width =_____feet _____meters

depth =_____feet _____meters

Choose Mounting Option from next page, and calculate the surface area as indicated

A = _____ ft2 or _____ m2

STEP 2: Choose the Heat Transmission Coefficient (k) for your enclosure's material of construction.

painted steel = 0.511 W/(ft2K) 5.5 W/(m2K)

stainless steel = 0.344 W/(ft2K) 3.7 W/(m2K)

aluminum = 1.115 W/(ft2K) 12 W/(m2K)

plastic or insulatedstainless = 0.325 W/(ft2K) 3.5 W/(m2K)

k = _____W/(ft2K) or _____ W/(m2K)

STEP 3: Determine the Temperature Differential (ΔT).

A. Desired enclosure interior temp. = ___oF ___oC

B. Lowest ambient (outside) temp. = ___oF ___oC

Subtract B from A = Temp. diff. (ΔT) = ___oF ___oC

For these calculations, ΔT must be in° Kelvin (K). Therefore, divide ΔT (oF) by 1.8. ΔT = _____ K

STEP 4: Determine Heating Power (PV), if any (generated from existing components, i.e. transformer).

PV = _____ W or _____ W

STEP 5: Calculate the Required Heating Power (PH) for your enclosure based on the above values.

If enclosure is located inside:

PH = (A x k x ΔT) - PV = _____ W

If enclosure is located outside:

PH = 2 x (A x k x ΔT) - PV = _____ W

Enclosure Mounting Types and Surface Area Calculations

1. Free-Standing

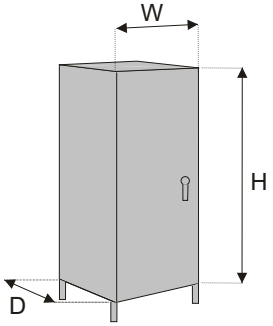

Area (A) =1.8ft³ [0.05m³] (H x W) + 1.8 (H x D) +1.8ft³ [0.05m³] (W x D)

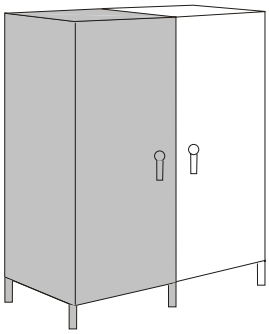

Area (A) =1.8ft³ [0.05m³] (H x W) + 1.4 (H x D) +1.8ft³ [0.05m³] (W x D)

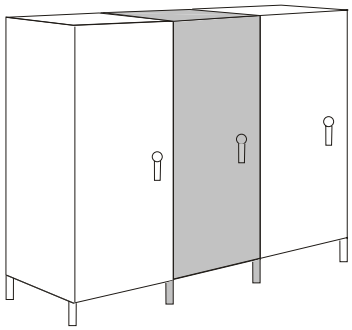

Area (A) =1.8ft³ [0.05m³] (H x W) + (H x D) +1.8ft³ [0.05m³] (W x D)

2. Wall-Mounted

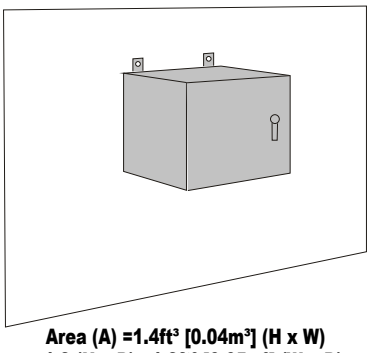

Area (A) =1.4ft³ [0.04m³] (H x W) + 1.8 (H x D) +1.8ft³ [0.05m³] (W x D)

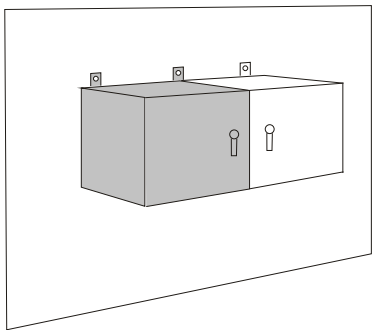

Area (A) =1.4ft³ [0.04m³] (H x W) + 1.4 (H x D) +1.8ft³ [0.05m³] (W x D)

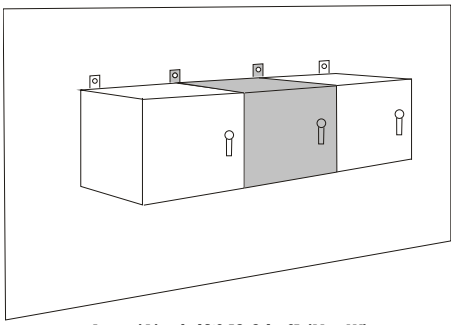

Area (A) =1.4ft³ [0.04m³] (H x W) + (H x D) +1.8ft³ [0.05m³] (W x D)

3. Ground

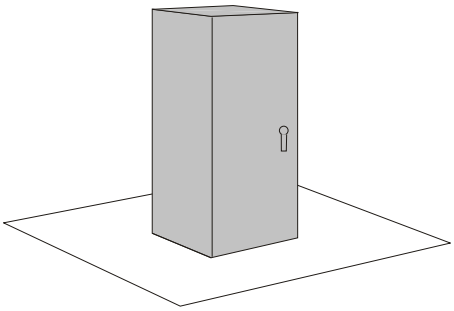

Area (A) =1.8ft³ [0.05m³] (H x W) + 1.8 (H x D) +1.4ft³ [0.04m³] (W x D)

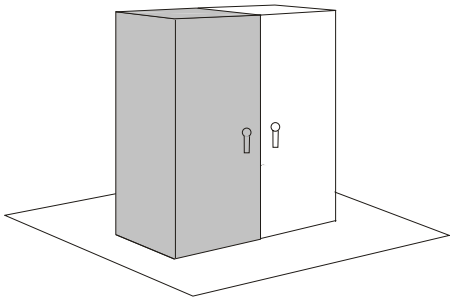

Area (A) =1.8ft³ [0.05m³] (H x W) + 1.4 (H x D) +1.4ft³ [0.04m³] (W x D)

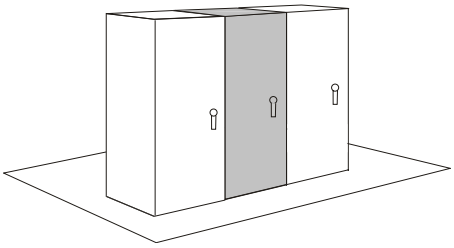

Area (A) =1.8ft³ [0.05m³] (H x W) + (H x D) +1.4ft³ [0.04m³] (W x D)

4. Ground and Wall

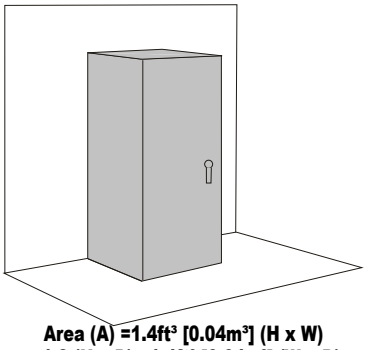

Area (A) =1.4ft³ [0.04m³] (H x W) + 1.8 (H x D) +1.4ft³ [0.04m³] (W x D)

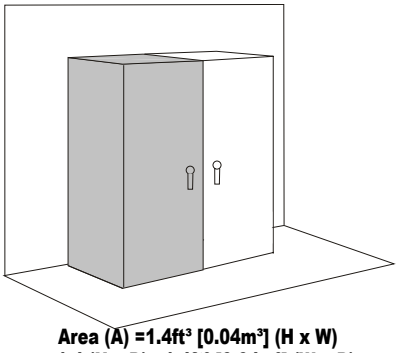

Area (A) =1.4ft³ [0.04m³] (H x W) + 1.4 (H x D) +1.4ft³ [0.04m³] (W x D)

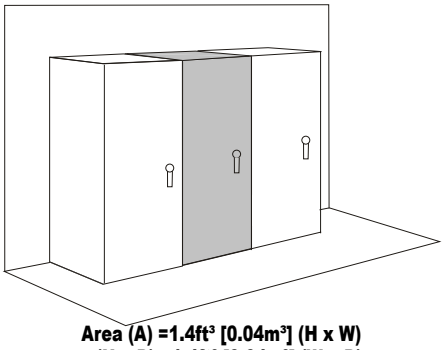

Area (A) =1.4ft³ [0.04m³] (H x W) + (H x D) +1.4ft³ [0.04m³] (W x D)