CWC Series Miniature Contactors

Overview

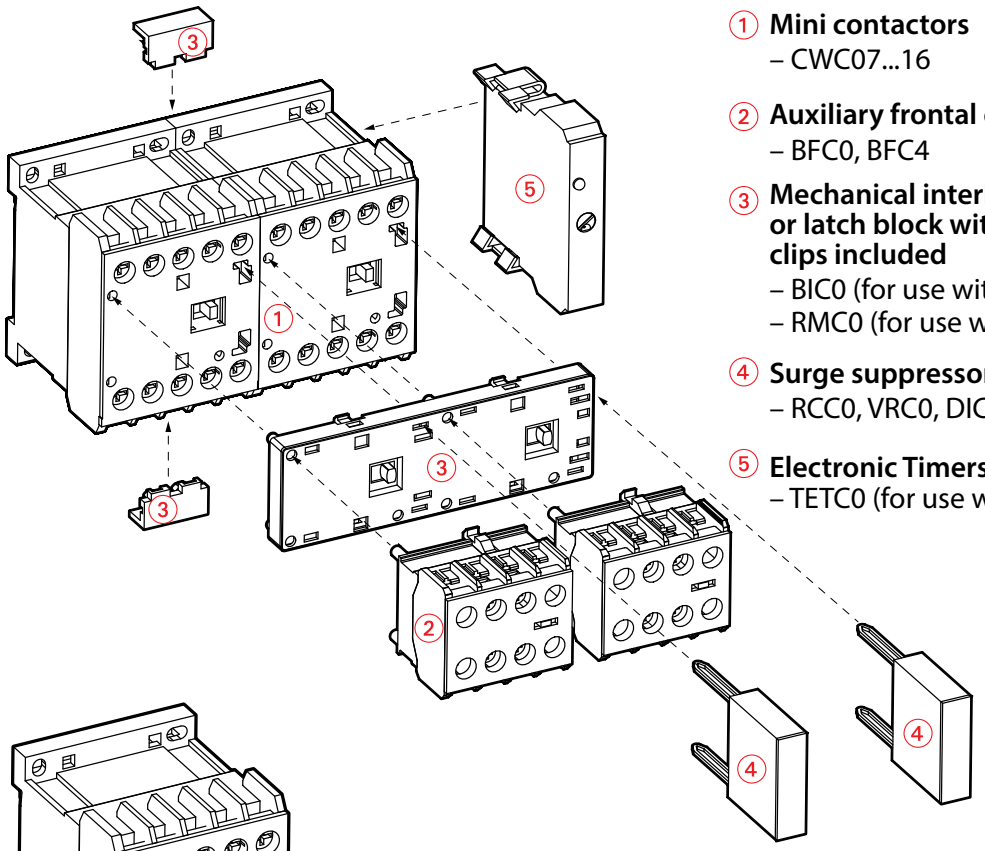

① **Mini contactors**
– CWC07...16

② **Auxiliary frontal contact block**
– BFC0, BFC4

③ **Mechanical interlock block or latch block with connecting clips included**
– BIC0 (for use with CWC07...16)
– RMC0 (for use with CWC07...16)

④ **Surge suppressor blocks**
– RCC0, VRC0, DIC0

⑤ **Electronic Timers**
– TETC0 (for use with CWC07...25)

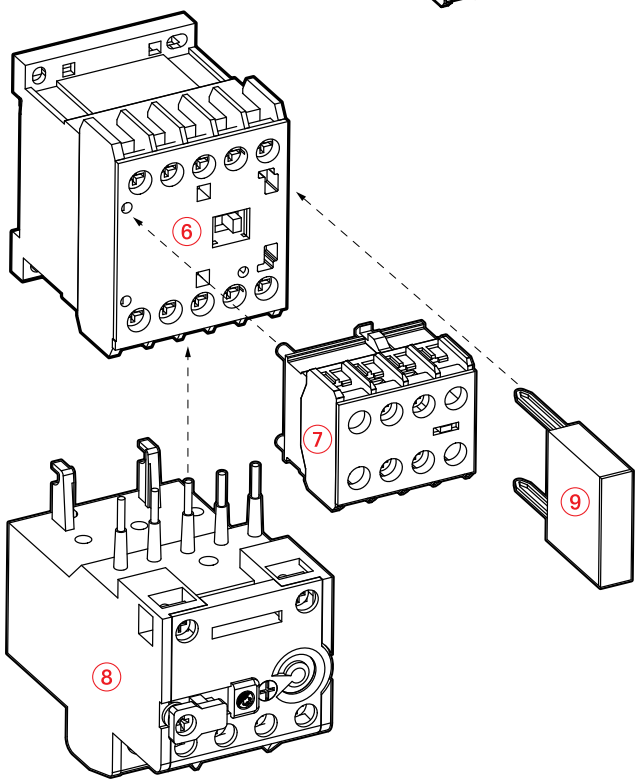

⑥ **Mini contactor**
– CWC025

⑦ **Auxiliary frontal contact block**
– BFC025

⑧ **Overload relay**
– RW17-2D (for use with CWC025)
– RW17-1D (for use with CWC07...16)

⑨ **Surge suppressor blocks**
– RCC0, VRC0