PRODUCT INFORMATION PACKET

Model No: 5KCR48TN8062
Catalog No: C194
General Purpose Motor, 3 HP, 1 Ph, 60 Hz, 115/230 V, 145T Frame, DP

Regal and LEESON are trademarks of Regal Rexnord Corporation or one of its affiliated companies.
©2025 Regal Rexnord Corporation, All Rights Reserved. MC017097E

Nameplate Specifications

Phase	1	Output HP	3 Hp
Output KW	2.2 kW	Voltage	115/230 V
Speed	3450 rpm	Service Factor	1.15
Frame	145T	Enclosure	Drip Proof
Thermal Protection	No Protection	Ambient Temperature	40 °C
Frequency	60 Hz	Current	29.4/14.7 A
Power Factor	0	Duty	Continuous
Insulation Class	B	KVA Code	J
Drive End Bearing Size	6205	Opp Drive End Bearing Size	6203
UL	Recognized	CSA	Y
CE	N		

Technical Specifications

Electrical Type	Capacitor Start Capacitor Run	Starting Method	Across The Line
Poles	2	Rotation	Counterclockwise/Clockwise
Motor Orientation	Any	Drive End Bearing	Ball
Opp Drive End Bearing	Ball	Frame Material	Rolled Steel
Shaft Type	NEMA 145T	Shaft Diameter	0.875 in
Outline Drawing	52A109637P2	Connection Drawing	52A105381BC

This is an uncontrolled document once printed or downloaded and is subject to change without notice. Date Created:11/13/2025

Uncontrolled Copy

52A109637

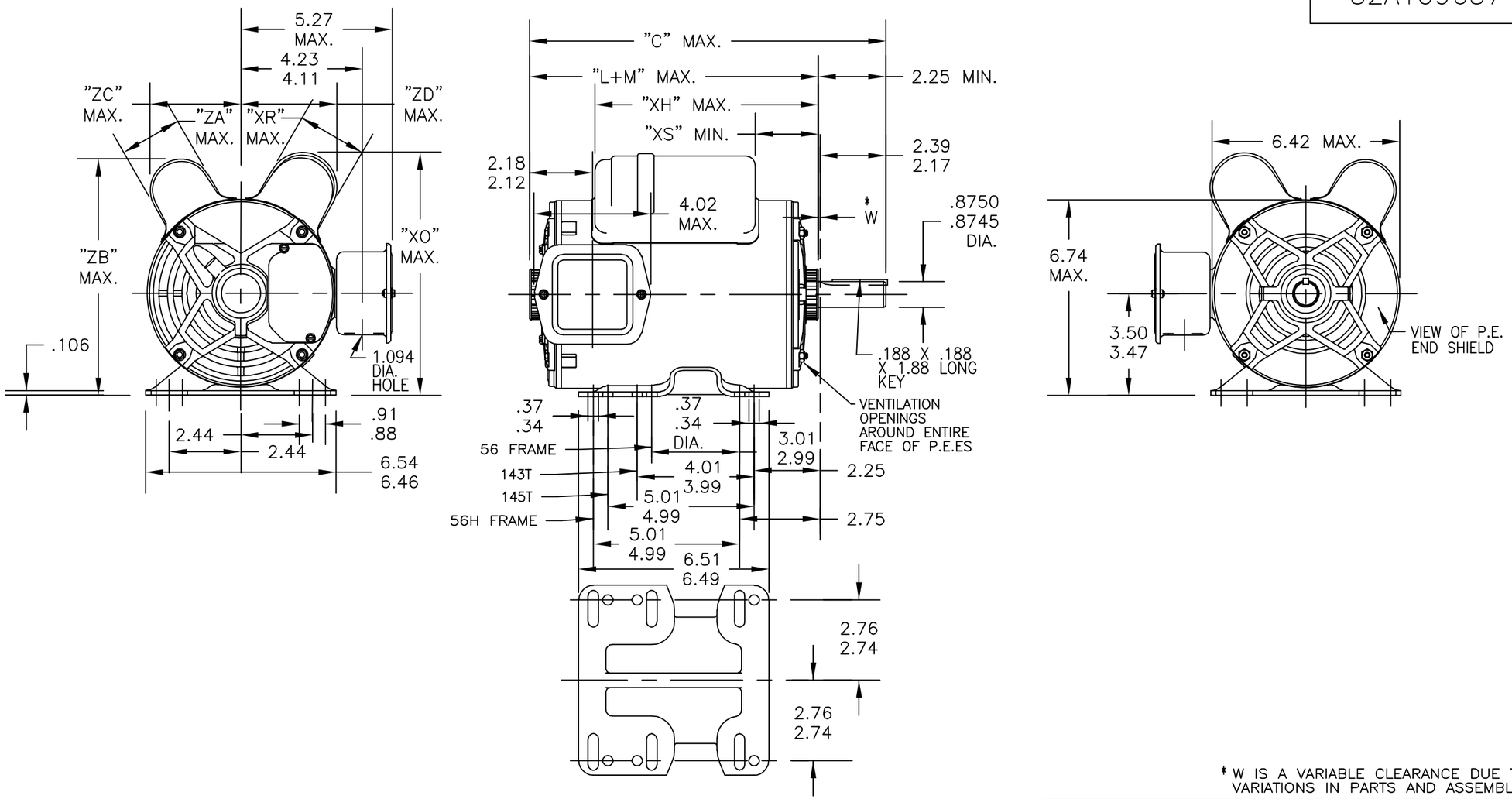

* W IS A VARIABLE CLEARANCE DUE TO VARIATIONS IN PARTS AND ASSEMBLY

ALL DIMENSIONS ARE IN INCHES

P	TYPE	RBC SIZE	NEMA FR.	"C"	"L+M"	"XH"	"XO"	"XR"	"XS"	"ZA"	"ZB"	"ZC"	"ZD"	MIN. SHELL
2	KCR	48	143T 145T	13.13	10.76	7.76	7.81	1.60	2.01	2.40	8.40	3.38	2.86	8.43
1	KCR	49	143T 145T	14.33	11.96	8.30	8.78	2.72	2.61	2.10	8.16	3.14	3.43	9.63

NO.	REVISION	BY & DATE	CHK
4	REDRAWN IN DRAFT SIGHT NO CHANGES	GR 10/16/12	PKG
3	CHG TO RBC FORMAT PER IS05-1777	SD 03/22/06	
2	REV. O.E. E.S. PER TI95-22196.	MDP10/20/95	

TOLERANCES UNLESS SPECIFIED

DEC.	INCHES
.X	±0.1
.XX	±0.02
.XXX	±0.005
.XXXX	±0.0005
ANG	±1.0

REGAL BELOIT — REGAL-BELOIT CORPORATION

TITLE: OUTLINE
DP- WELDED BASE

MAT'L.
FINISH
CAD FILE 52A109637
RFP
DIST

DRAWN M.D.P 06/22/94
CHK
APPD M.D.P 06/22/94
SCALE 1=1
REF
FMF
PREV

SIZE A | DRAWING NO. 52A109637 | REV. 4

THIS DRAWING IN DESIGN AND DETAIL IS OUR PROPERTY AND MUST NOT BE USED EXCEPT IN CONNECTION WITH OUR WORK ALL RIGHTS OF DESIGN AND INVENTION ARE RESERVED
THIS IS AN ELECTRONICALLY GENERATED DOCUMENT – DO NOT SCALE THIS PRINT

NAME:50101263 9 OBJECT:52A105381BC DATE:04-Jan-06 07:46:28

SHEET 1 | REV 3 | DRAWING NO. 52A105381BC | SIZE

THIRD ANGLE PROJECTION

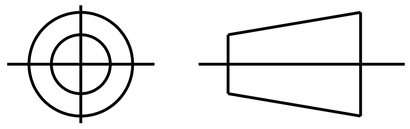

REVISIONS

REV.	DESCRIPTION	DATE	APPROVED
3	UPDATED FORMAT	01/04/06	MAM

CCW/CW ROTATION - DUAL VOLTAGE
TYPE KCR

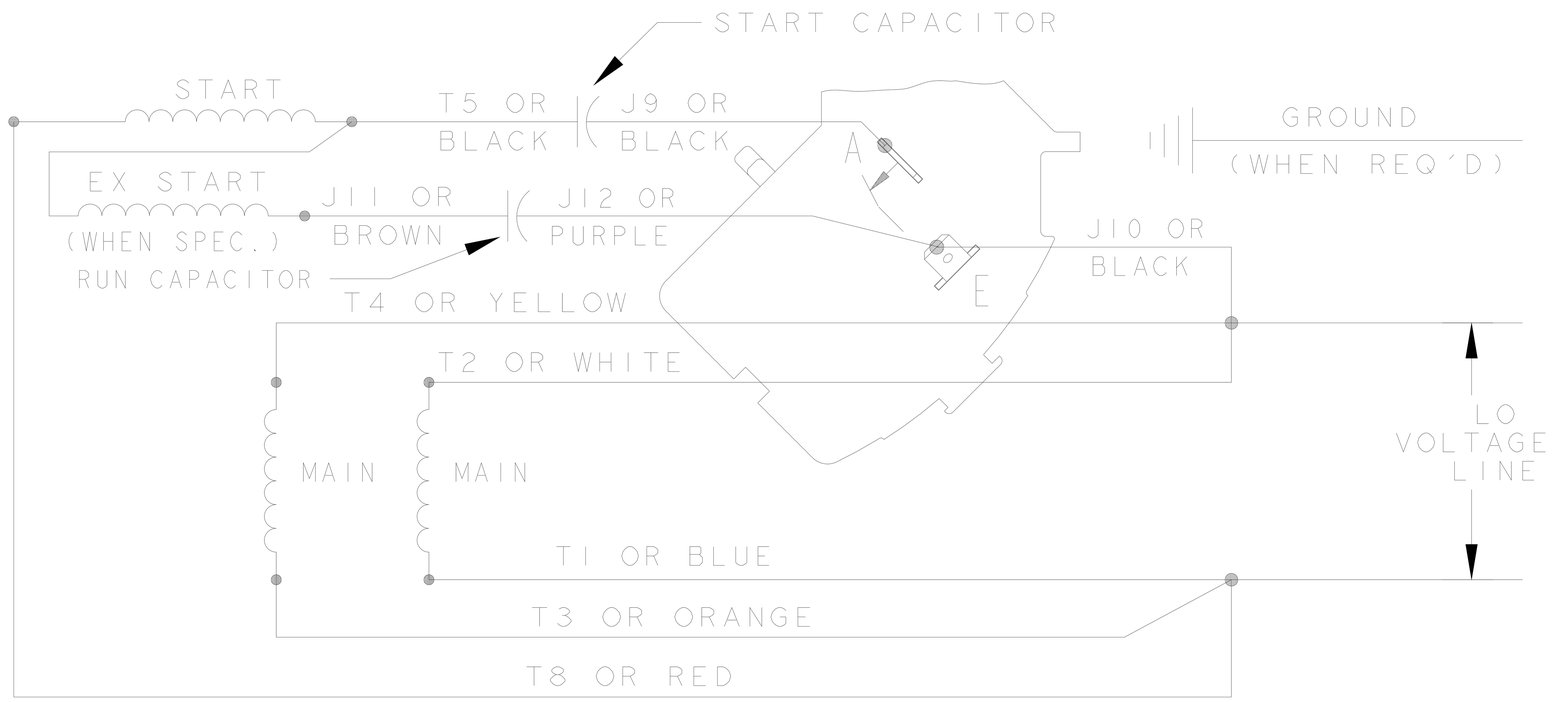

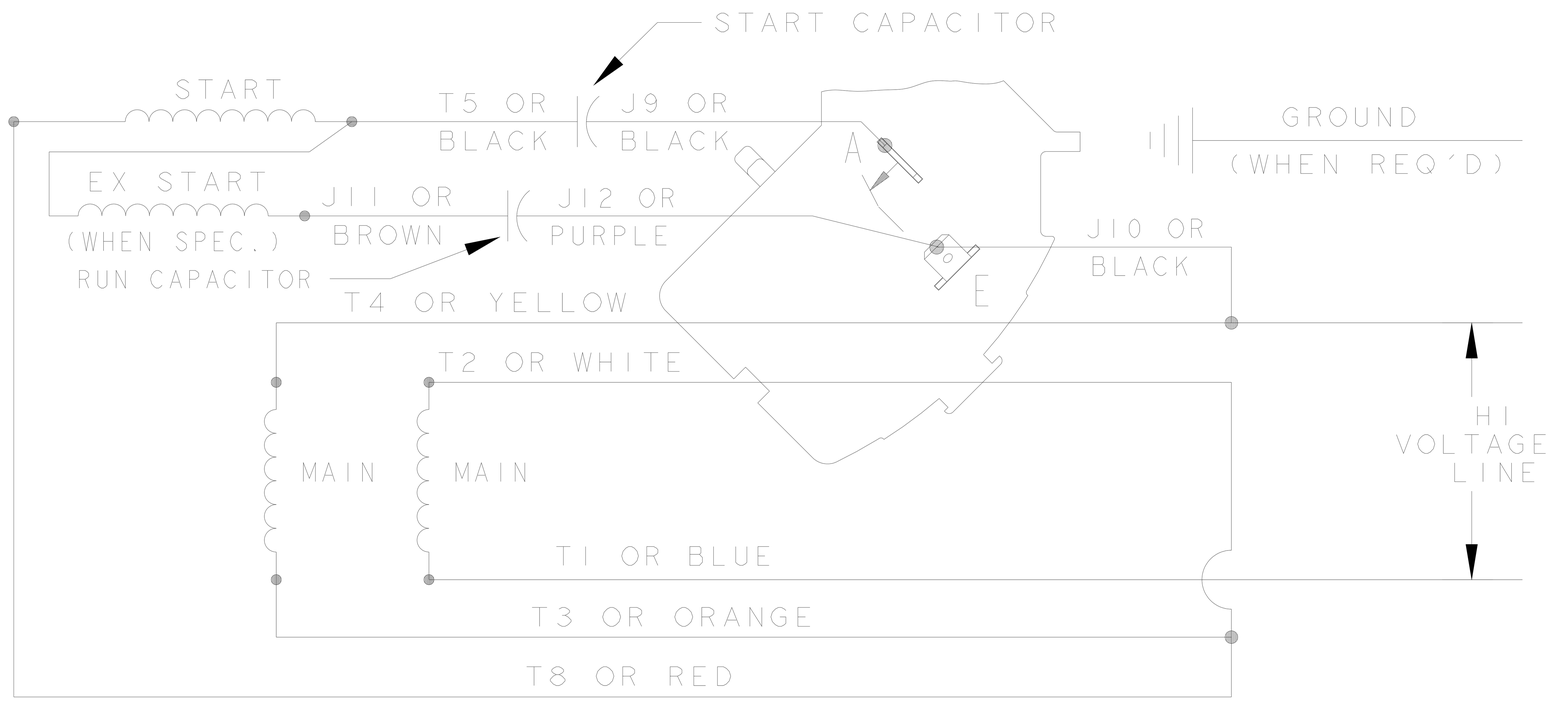

NOTE#1 - TO REVERSE ROTATION, INTERCHANGE T8 RED AND J10 BLACK LEADS.
NOTE#2 - WHEN MORE THAN ONE CAPACITOR IS USED, CONNECT IN PARALLEL.

SWITCH (H) - 115D958AA

REF. DIAG. - 119A9324

CONNECTION LABEL - 52X332917

SIGNATURES		DATE
MODEL	M.D.PAPE	05/09/90
DETAIL	.	.
CHECKED	.	.
ENGRG	.	.
MFG	.	.
QUALITY	.	.
ISSUED	M.D.P.	05/09/90

SOLID MODEL: 52A105381BC

FOR ADDITIONAL INFO REFER TO:
APPLIED PRACTICES .
DIMENSIONS ARE IN INCHES
MATERIAL .

REGAL BELOIT

REGAL-BELOIT CORPORATION

TITLE CONNECTION DIAGRAM

FMF: 5KCR39QN9822G

SIZE A | DRAWING 52A105381BC | REV 3

SCALE: 1.000 | REF. No: . | SHEET 1 OF 1