Specialty Modules Specifications

Chapter 4

In This Chapter...

Specialty Modules Overview **4–2**

P1-02HSC High-Speed Isolated Sinking/Sourcing Input **4–3**

Wiring Diagrams 4–5

Wiring Example for Koyo Totem Pole Output Encoder 4–7

Module Configuration 4–8

P1-04PWM Module **4–9**

Wiring Diagrams 4–11

Module Configuration 4–12

High-Speed Module Tester Utility **4–13**

Specialty Modules Overview

Two specialty I/O modules are available for use with the Productivity® 1000 system, the P1-02HSC High-Speed Input Module and the P1-04PWM Pulse Width Modulation module.

Each I/O module is identified as either an "Input" or "Output"module on its front panel using the color coding scheme listed below. The specifications and wiring diagrams, along with configuration and signal information, are in this chapter.

The P1-02HSC High-Speed Counter module provides two independent single-ended 5-24 V inputs that accept up to 100kHz of pulse/direction and quadrature signals. Additionally, two 5-24 VDC general purpose high-speed inputs are included for use with the Productivity® 1000 system.

The P1-04PWM pulse Width Modulation module provides four channels of sinking or sourcing 0–20 kHz, 0–100% duty cycle outputs.

Use the hardware configuration tool in the Productivity Suite programming software to set up the specialty I/O modules. See the Productivity Suite software help file for in-depth configuration and programming concepts.

For applications that require specialized motion control, consider including a PS-AMC module.

High-Speed Input Modules

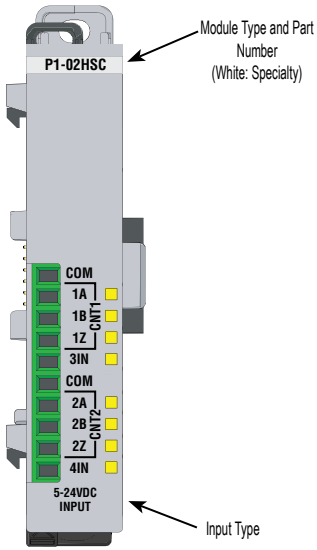

Pulse Width Modulation

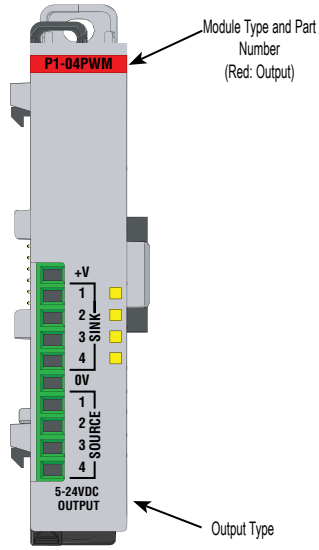

Productivity1000 Specialty I/O Modules			
Part Number	Number of Channels	Description	See Page
P1-02HSC	2	High-Speed Input (Current)	4–3
P1-04PWM	4	Pulse-Width Modulation Input (Voltage)	4–9

P1-02HSC High-Speed Isolated Sinking/Sourcing Input

The P1-02HSC High-Speed Counter Module provides two independent single-ended 5–24 VDC inputs that accept up to 100kHz of pulse/direction and quadrature signals. Additionally, two 5–24 VDC general-purpose high-speed inputs are included for use with the Productivity® 1000 System.

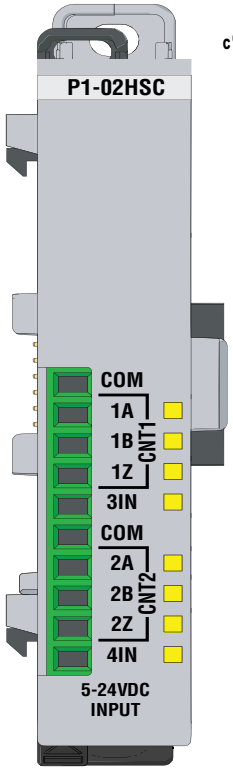

Terminal Block sold separately.

Input Specifications

Inputs per Module	Single ended Counter Inputs (6pts: 1A, 1B, 1Z, 2A, 2B, 2Z) General-purpose Inputs (3IN, 4IN)
Input Voltage Range	5–24 VDC
Operating Voltage Range	4.25–27.6 VDC
Input Current	1.5 mA typical @ 4.25 VDC 11mA maximum @ 27.6 VDC
Input Impedance	2.5 kΩ
Minimum ON Current	1mA
Maximum OFF Current	0.4 mA
Minimum ON Voltage	4.5 VDC
Maximum OFF Voltage	2.2 VDC
OFF to ON, ON to OFF Response	2µs
Maximum Input Frequency	100kHz
Module Range	Target position range ±2.147 billion (32-bit signed integer)
Status Indicators Logic Side	8 points
Commons	2 (4 points/common)

** Meets EMC and Safety requirements. See the D.O.C. for details.*

NOTE: *For complete system limits, please refer to the "Hardware and Communication Limits" table in the Productivity Suite online "Help" file "Hardware Configuration", topic P050.*

We recommend using pre-wired ZIPLink cables and connection modules. See Chapter 5. If you wish to hand-wire your module, removable terminal blocks are sold separately. Order part number P1-10RTB or P1-10RTB-1

P1-02HSC High-Speed Isolated Sinking/Sourcing Input (continued)

General Specifications	
Operating Temperature	0ºC–60ºC (32ºF–140ºF)
I/O Points Used	None, mapped directly to tags in CPU
Storage Temperature	-20ºC–70ºC (-4ºF–158ºF)
Humidity	5 to 95% (non-condensing)
Environmental Air	No corrosive gases permitted
Vibration	IEC 60068-2-6 (Test Fc)
Shock	IEC 60068-2-27 (Test Ea)
Field to Logic Side Isolation	1800VAC applied for 1s
Insulation Resistance	>10MΩ @ 500VDC
Heat Dissipation	1300mW
Field Wiring	Use ZIPLink wiring system. See “Wiring Options” in Chapter 5.
Terminal Type (sold separately)	10-position Removable Terminal Block
Weight	54g (2oz)
Agency Approvals	UL 61010-1 and UL 61010-2-201 File E139594, Canada and USA CE (EN 61131-2 EMC, EN 61010-1 and EN 61010-2-201 Safety)**

**Note: For complete system limits, please refer to the “Hardware and Communication Limits” table in the Productivity Suite Help File, “Hardware Configuration” topic (P050).*
***Meets EMC and Safety Requirements. See the D.O.C. for details.*

Removable Terminal Block Specifications		
Part Number	P1-10RTB	P1-10RTB-1
Number of positions	10 screw terminals	10 spring clamp terminals
Wire Range	30–16 AWG (0.051–1.31 mm²) Solid/stranded conductor 3/64 in. (1.2 mm) insulation max. 1/4 in (6– 7 mm) strip length	28–16 AWG (0.081–1.31 mm²) Solid/stranded conductor 3/64 in (1.2 mm) insulation max. 19/64 in (7–8 mm) strip length
Conductors	USE COPPER CONDUCTORS, 75ºC or equivalent.	
Screw Driver	0.1 in (2.5 mm) maximum*	
Screw Size	M2	N/A
Screw Torque	2.5 lb·in (0.28 N·m)	N/A

** Recommended screw driver P/N: TW-SD-MSL-1.*

P1-02HSC High-Speed Isolated Sinking/Sourcing Input (continued)

Wiring Diagrams

High Speed General Purpose Inputs

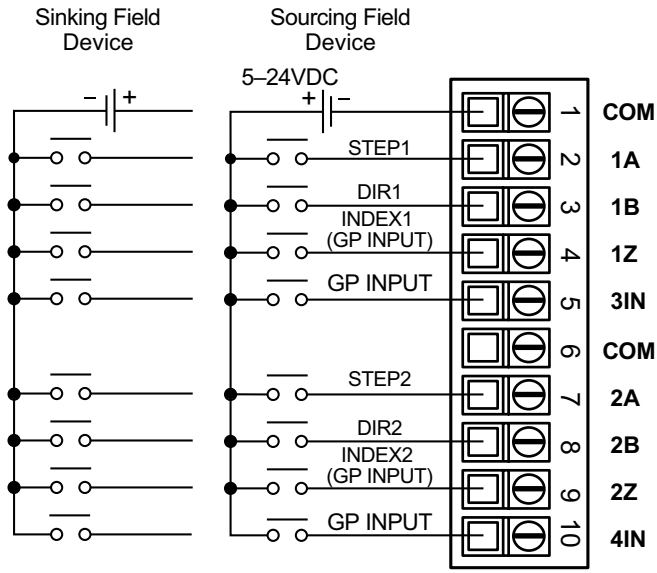

Equivalent Input Circuit

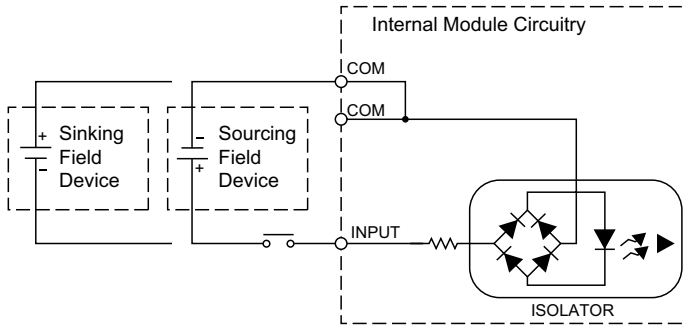

P1-02HSC High-Speed Isolated Sinking/Sourcing Input (continued)

Wiring Example for Koyo Open Collector Output Encoder

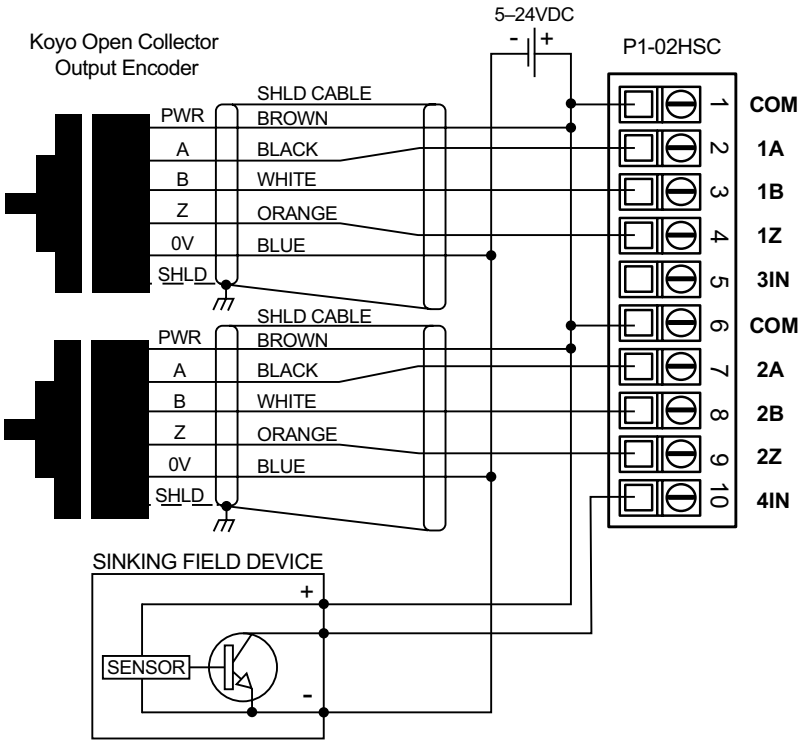

Line Driver Output Encoders Not Reccommended for P1-02HSC

P1-02HSC High-Speed Isolated Sinking/Sourcing Input (continued)

Wiring Example for Koyo Totem Pole Output Encoder

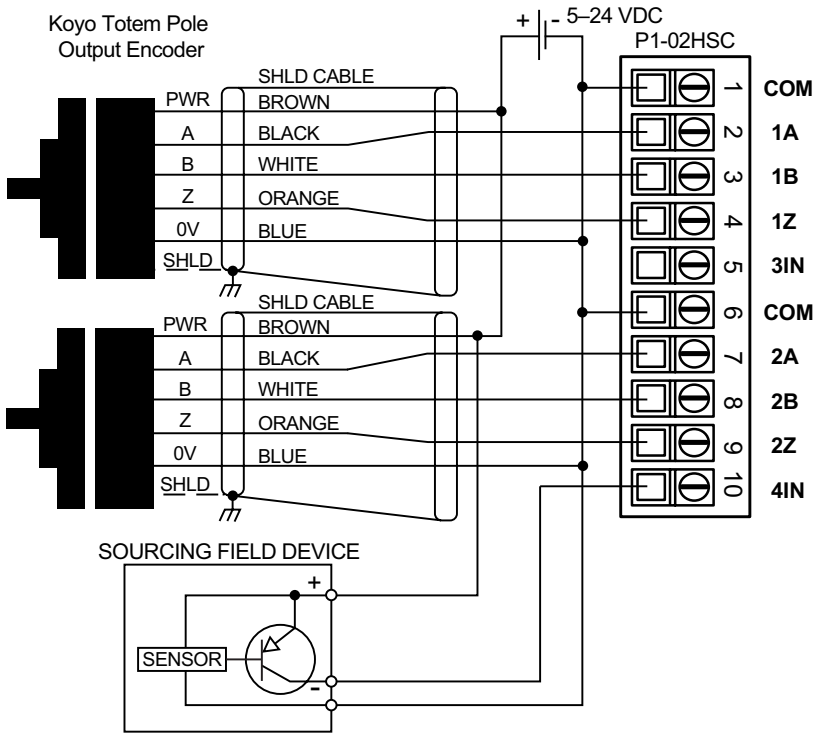

P1-02HSC High-Speed Isolated Sinking/ Sourcing Input (continued)

Module Configuration

Using the Hardware Configuration tool in the Productivity Suite programming software, drag and drop the P1-02HSC module into the base configuration.

If desired, assign a *User Tagname* to each output point channel selected. A *Stop Mode Value* may also be assigned.

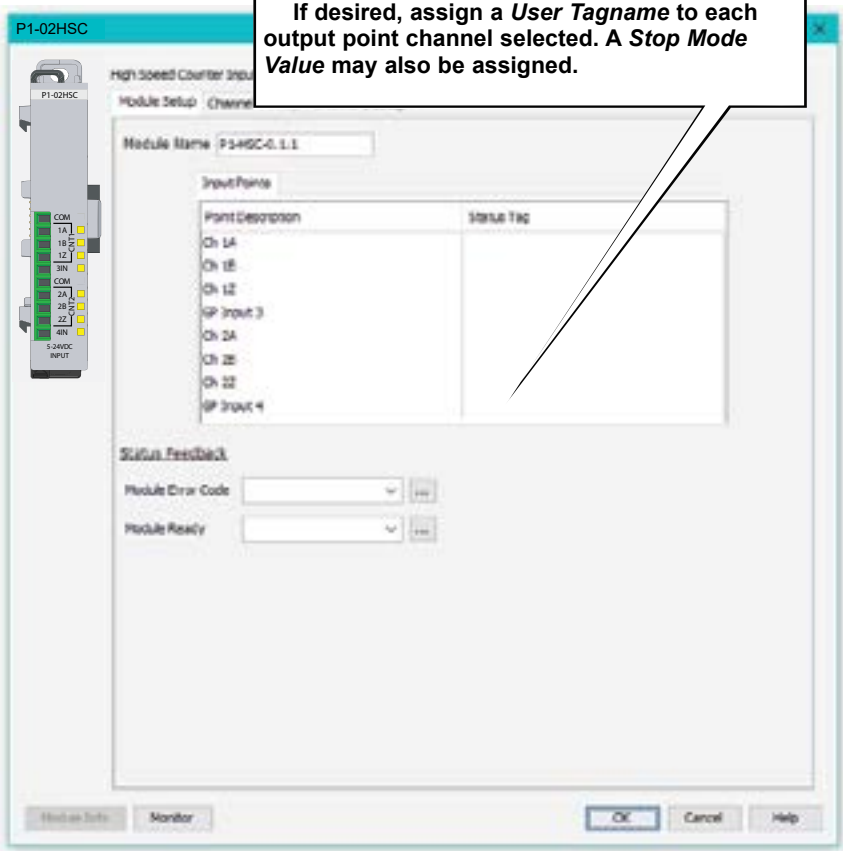

P1-04PWM Module

The P1-04PWM pulse width modulation module provides four channels of sinking or sourcing 0–20 kHz, 0–100% duty cycle outputs for use with the Productivity® 1000 system.

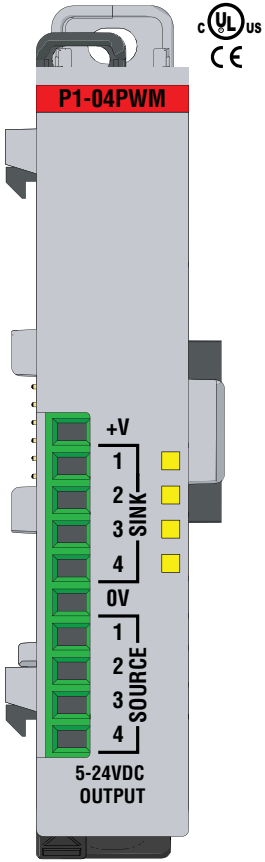

Terminal Block sold separately.

Output Specifications

Outputs per Module	4 PWM outputs	
Output Type	Open drain N-CH MOSFET (sinking)	Open drain P-CH MOSFET (sourcing)
Rated Voltage	5–24 V	
Operating Voltage Range	4.75–28.8 VDC	
Maximum Output Current Only Sinking Load Only Sourcing Load Both Sinking and Sourcing Loads	 200mA 0mA 100mA	 0mA 200mA 100mA
Minimum Load Current	5mA @ 5V	
Maximum Leakage Current	0.1 mA @ 28.8	
On Voltage Drop	0.8 VDC @ 200mA	1.2 V @ 200mA
Maximum Inrush Current	500mA for 50ms	
Maximum Frequency Inaccuracy	0.5% of range	
Maximum Duty Cycle Inaccuracy	0.6% of range below 10kHz 1.2% of range 10–20 kHz	
Maximum Load Resistance for Stated Accuracy	1kΩ	
Accuracy vs. Temperature	±50PPM max.	
Start/Stop PWM Response	0.5 ms	
PWM Frequency	0–20 kHz	
PWM Duty Cycle	0–100% below 10kHz 5–95% 10–20 kHz	
Status Indicators	Logic Side 4 points	
Commons	1 non-isolated	
Maximum Applicable Fuses	1A	
External Power Supply Required	5–24 VDC @ 40mA, Class 2	

Power Specifications

Maximum Voltage	28.8 V
Minimum Voltage	4.75 V
Current Consumption Excluding Outputs	40mA
Maximum Current Consumption Total for 4 sink or 4 source Outputs	800mA

We recommend using pre-wired ZIPLink cables and connection modules. See Chapter 5.
If you wish to hand-wire your module, removable terminal blocks are sold separately. Order part number P1-10RTB or P1-10RTB-1

Warranty: Thirty-day money-back guarantee.
Two-year limited replacement.
(See www.productivity1000.com for details.)

P1-04PWM Module Overview (continued)

General Specifications	
Operating Temperature	0ºC–60ºC (32ºF–140ºF)
Storage Temperature	-20ºC–70ºC (-4ºF–158ºF)
Humidity	5 to 95% (non-condensing)
Environmental Air	No corrosive gases permitted
Vibration	IEC 60068-2-6 (Test Fc)
Shock	IEC 60068-2-27 (Test Ea)
Field to Logic Side Isolation	1800VAC applied for 1s
Insulation Resistance	>10MΩ @ 500VDC
Heat Dissipation	1400mW
Enclosure Type	Open equipment
Module Location	Any I/O location in a Productivity®1000 system
Field Wiring	Removable terminal block (sold separately). Use ***ZIP***Link wiring system. See “Wiring Options” in Chapter 5.
Terminal Type (Sold Separately)	10-position removable terminal block
Weight	56g (2oz)
Agency Approvals	UL 61010-1 and UL 61010-2-201 File E139594, Canada and USA CE (EN 61131-2 EMC, EN 61010-1 and EN 61010-2-201 Safety)*

** See CE Declaration of Conformance for details.*

Removable Terminal Block Specifications		
Part Number	P1-10RTB	P1-10RTB-1
Number of positions	10 screw terminals	10 spring clamp terminals
Wire Range	30–16 AWG (0.051–1.31 mm²) Solid/stranded conductor 3/64 in. (1.2 mm) insulation max. 1/4 in (6– 7 mm) strip length	28–16 AWG (0.081–1.31 mm²) Solid/stranded conductor 3/64 in (1.2 mm) insulation max. 19/64 in (7–8 mm) strip length
Conductors	USE COPPER CONDUCTORS, 75ºC or equivalent.	
Screw Driver	0.1 in (2.5 mm) maximum*	
Screw Size	M2	N/A
Screw Torque	2.5 lb·in (0.28 N·m)	N/A

** Recommended screw driver P/N: TW-SD-MSL-1.*

P1-04PWM Module Overview (continued)

Wiring Diagrams

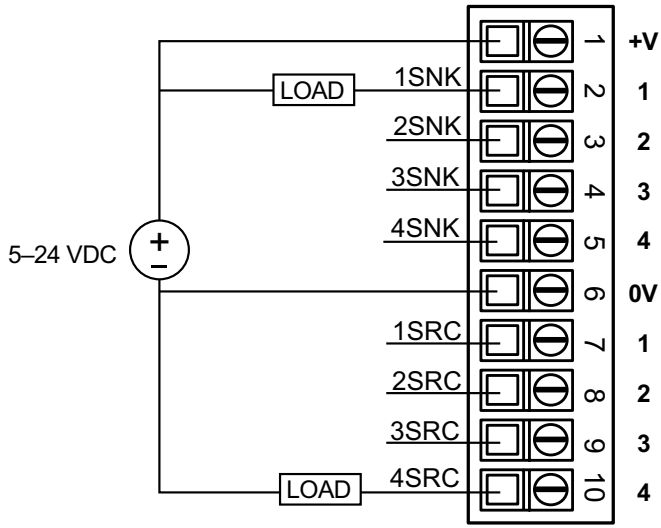

NOTE: *Both channels (sinking/sourcing) output the same frequency and duty cycle that is assigned to the tag in Hardware Configuration window.*

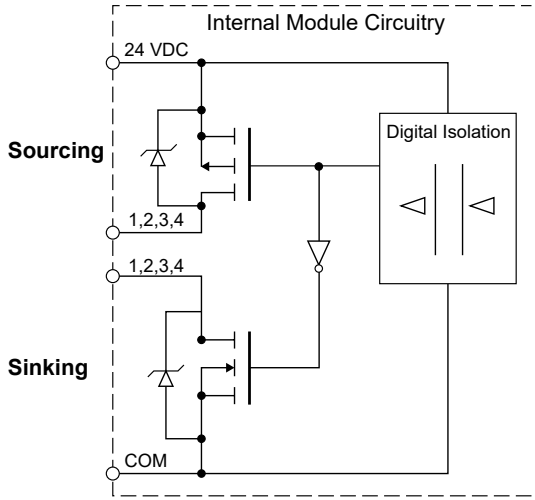

P1-04PWM Module Overview (continued)

Module Configuration

Using the Hardware Configuration tool in the Productivity Suite programming software, drag and drop the P1-04PWM module into the base configuration.

If desired, assign a *User Tagname* to each output point channel selected. A *Stop Mode Value* may also be assigned.

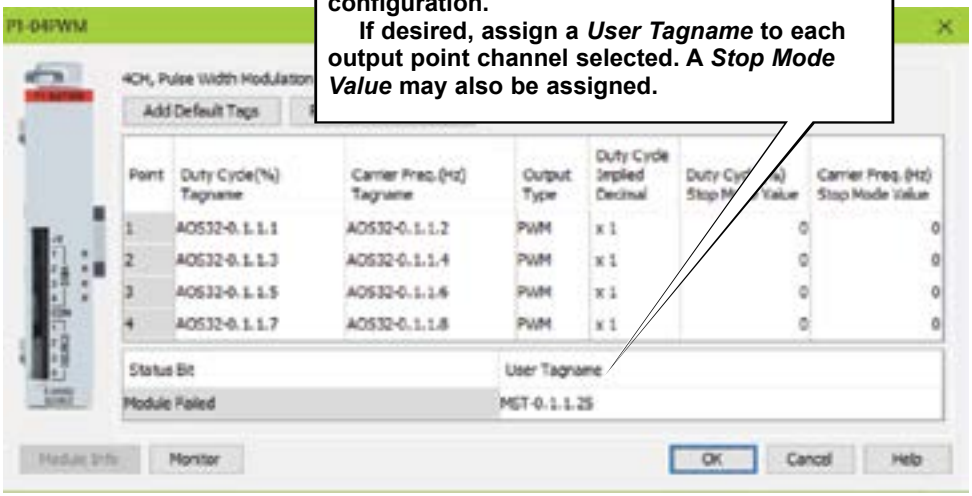

High-Speed Module Tester Utility

The High-Speed Module Tester software utility allows a user to test the PS-AMC module's inputs and outputs. It is highly recommended that you simulate your PS-AMC functions before attempting to control the module from your CPU program. This software utility, seen below, can be useful with debugging, confirming field wiring and verifying external device operation.

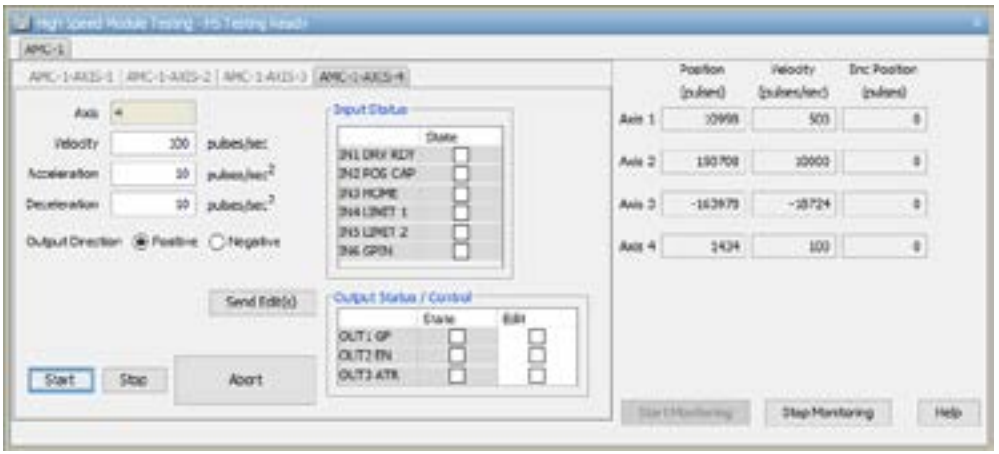

Refer to the Productivity Suite Help file for more information on the High-Speed Module Tester Utility.