L7P Serial Communication

Foreword

The LS Electric L7P drive supports serial RS422/485 communication on the two RJ45 connectors on the face of the drive. AutomationDirect has tested serial communication with the L7P drive successfully up to 57,600 bps.

AutomationDirect provides sample PLC code for communication to L7P drives. Go to the AutomationDirect.com item page of any L7P drive and click on the Sample Programs link under **Support Resources** for example code written with Click, BRX, and Productivity PLCs.

Wiring

The L7P documentation references RS-422 (2 wires for transmit; 2 wires for receive). RS-422 is nearly identical to RS-485 except RS-485 only uses 2 wires total. All AutomationDirect PLCs with RS-485 capability can talk to the L7P by tying the + Transmit and + Receive wires together and tying the - Transmit and - Receive wires together as shown below:

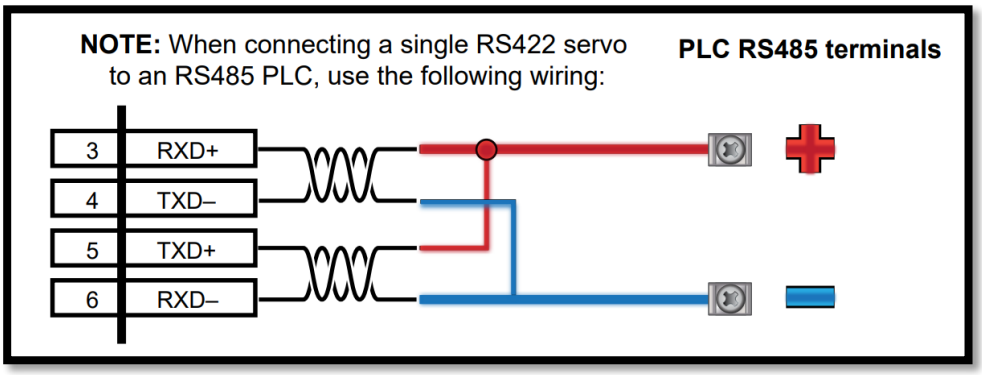

Pins 3, 4, 5, and 6 are on the L7P RJ45 connector labeled "IN". Strip back one side of an ethernet/RJ45 cable to connect the servo "IN" port to a PLC's RS485 terminals. Or use a **ZL-RTB-RJ45** RJ45 breakout board.

For multiple drives, use a standard ethernet cable to connect the "OUT" RJ45 connector of the first drive to the "IN" connector of the next drive. Connect multiple drives the same way with normal ethernet patch cables. On the last drive in the system, set DIP switch #2 (located below the 7-segment LEDs) to ON to incorporate a 120Ω terminating resistor. Additionally, it is important to make sure grounding/common is connected between drives and controller to avoid a floating differential voltage that may affect the communication.

Pin Number	Pin Function
1	Not Used
2	Not Used
3	RXD+
4	TXD-
5	TXD+
6	RXD-
7	Not Used *
8	Not Used *

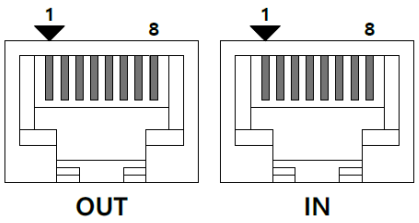

Pin arrangement viewed from the front side of the drive

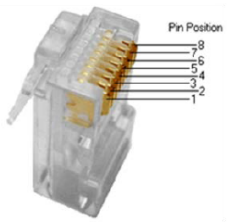

Pin arrangement viewed from the connector

* There is 5V present on Pins 7 and 8 on the "IN" connector. Do not connect anything to pins 7 and 8 (except ethernet patch cables that connect to another drive).

Next, set the Node ID (Modbus Address) with the rotary DIP switch and DIP switch #3 (both located below the 7-segment LEDs). DIP switch #3 adds a value of 16 to the Rotary DIP switch's Node ID value when switch #3 is ON.

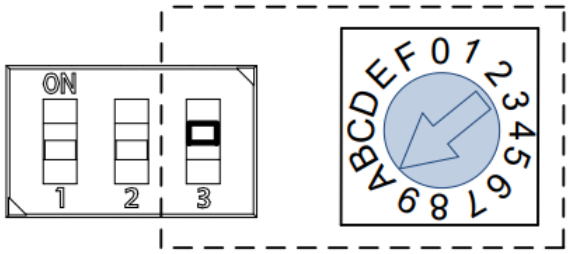

Desired Node Address	Rotary Dial Position	DIP Switch #3 Position	Desired Node Address	Rotary Dial Position	DIP Switch #3 Position
0	0	OFF	16	0	ON
1	1	OFF	17	1	ON
2	2	OFF	18	2	ON
3	3	OFF	19	3	ON
4	4	OFF	20	4	ON
5	5	OFF	21	5	ON
6	6	OFF	22	6	ON
7	7	OFF	23	7	ON
8	8	OFF	24	8	ON
9	9	OFF	25	9	ON
10	A	OFF	26	A	ON
11	B	OFF	27	B	ON
12	C	OFF	28	C	ON
13	D	OFF	29	D	ON
14	E	OFF	30	E	ON
15	F	OFF	31	F	ON

Settings

Configure the following settings in the PLC and drive.

- Protocol: Modbus RTU
- Parity: None (these are not adjustable in the L7P)
- Data bits: 8
- Stop bits: 1

Decimal Address	Hex Address	Parameter Number	Description	Settings
8196	**0x2004**	**0x2003**	Node ID	This address is Read Only. Value is set with DIP switches (see above). The DIP switch values are only read at power-up.
12290	0x3002	0x3002	Baud Rate Select	0: 9600 2: 38400 1: 19200 3: 57600

NOTE: The Hex Address (Modbus address) and the Parameter Number (shown in the User Manual and in the Object Dictionary in Drive CM) for **Node ID** are slightly different.

In Drive CM's Object Dictionary, **Node ID** is found under the "Basic" tab and **Baud Rate Select** is found under the "Index" tab.

EEPROM

Address 0x2416 **Individual Parameter Save** is 0 by default. You can save parameters individually to the EEPROM by temporarily setting this parameter to 1. If this parameter is used, **ensure that this parameter is reset to 0 to prevent continuous writing to the EEPROM**. The EEPROM can only be written to a limited number of times. This limitation is 4 million writes, but if you accidentally leave this bit ON and your PLC writes to the EEPROM every 50ms, that limit could be reached within a couple of months.

Decimal Address	Hex Address	Parameter Number	Description	Settings
9238	**0x2416**	**0x240E**	Individual Parameter Save	1 – 99 (must be set different than the PLC ID)

NOTE: The Hex Address (Modbus address) and the Parameter Number (shown in the User Manual and in the Object Dictionary in Drive CM) are slightly different.

Status Parameters

Use the following parameters to monitor drive status with serial Modbus.

Decimal Address	Hex Address	Parameter Number	Description	Settings
24576	0x6000	N/A	Current Alarm in Hexadecimal	**This address is not documented in the User Manual.** See Section 14.2 in the User Manual for available **Alarm** Codes and descriptions.
9755	**0x261B**	**0x2614**	Current Warning in Hexadecimal	See Section 14.3 for available Warning Codes and descriptions.

NOTE: The Hex Address (Modbus address) and the Parameter Number (shown in the User Manual and in the Object Dictionary in Drive CM) for **Current Warning** are slightly different.

Controlling the Drive with Modbus

There are two methods of Modbus control. The more flexible method is described below in this document. For a description of the more limited "Procedure Function", please see Chapter 12 of the L7C User Manual.

NOTE: if using "Procedure Function" in Chapter 12, the **Argument** (0x2701) must be populated ***before*** the **Command Code** (0x2700). They cannot be sent in the same message. This is not explained in the User Manual.

Command and Control – Initiate Indexing over comms

This section will show how to use serial communication to enable the drive and initiate indexing. Other control modes (Velocity, Torque) would use similar functionality.

To use the L7C's internal indexer, you must perform these procedures:

A) Configure the control mode [use Drive CM*]
B) Configure the inputs for comms use [use Drive CM*]
C) Choose the method of index selection [use Drive CM*]
D) Populate the index parameters [use Drive CM*]
E) Save Settings and Reboot the Drive [use Drive CM*]
F) Enable the drive
G) Trigger the START signal

*These functions can be written over Modbus, but using Drive CM is very convenient and quick.

Procedure	Description
A	**Configure the Control Mode** Use Drive CM's Object Dictionary to set **Control Mode** (0x3000) to **0: Indexing Position Mode**. This parameter is under the "Index" tab. Make sure you press "Enter" after entering a value of 0.  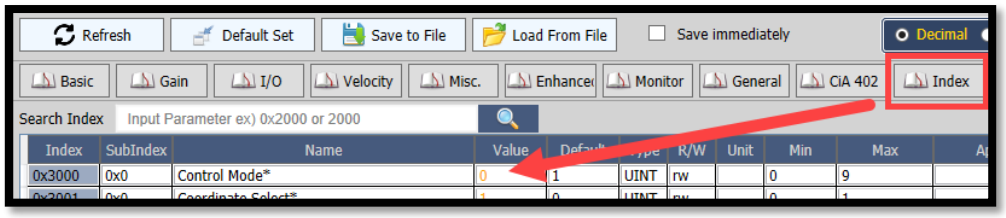
B	**Configure the Inputs for Comms Use** Use Drive CM to set the Digital Inputs that will be controlled via comms to "Not Assigned". Make sure that **SV_ON**, **START**, **ISEL0**, **ISEL1**, **ISEL2**, **ISEL3**, **ISEL4**, and **ISEL5** are not defined as physical digital inputs. This will allow these functions to be controlled by Modbus.  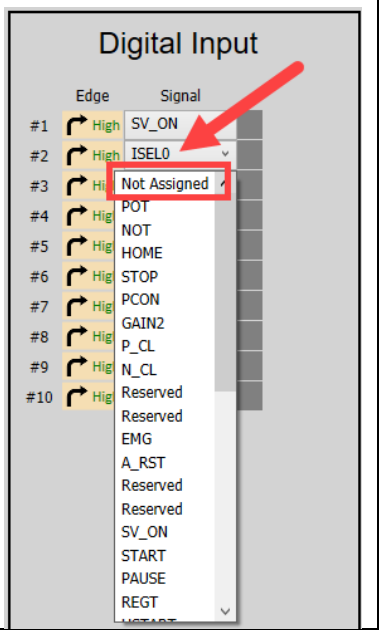

Procedure	Description

C

Choose the Method of Index Selection

There are two ways to define which Index to execute:

1) Set **Start Index Number (0~63)** to the desired Index Number (0 – 63). This can be written over Modbus in real time before a move is initiated, or
2) Set **Start Index Number (0~63)** equal to 64. This enables **ISEL0** – **ISEL5** to determine which Index will be executed (binary decode).

If all **ISELx** inputs are OFF, the selected Index = Index 0. If all **ISELx** inputs are ON, the selected Index = Index 63.

Index No	ISEL Input Signal					
	ISEL5	ISEL4	ISEL3	ISEL2	ISEL1	ISEL0
0	X	X	X	X	X	X
1	X	X	X	X	X	O
2	X	X	X	X	O	X
3	X	X	X	X	O	O
4	X	X	X	O	X	X
...						
60	O	O	O	O	X	X
61	O	O	O	O	X	O
62	O	O	O	O	O	X
63	O	O	O	O	O	O

Decimal Address	Hex Address	Parameter Number	Description	Settings
12297	**0x3009**	**0x3008**	Start Index Number (0~63)	1 – 63: Index to run 64: Index is selected by **ISEL0 – ISEL5**

NOTE: The Hex Address (Modbus address) and the Parameter Number (shown in the User Manual and in the Object Dictionary in Drive CM) are slightly different.

D

Populate the Index Parameters

Populate the index parameters. Click on Index Edit to open the editing window for indexes.

These parameters can also be written to at run time. See the Index addresses below this list of procedures.

E

Save Settings and Reboot the Drive

Steps A) - D) configured the servo for comms control of the drive. Press the **Save to Memory** icon to save these parameters to the EEPROM. Otherwise, they will revert after a power cycle.

Next, cycle power or press the **Software Reset** icon to allow the change in **Control Mode** to take effect.

The drive is now ready for Modbus control.

<table>
<tr><th>Procedure</th><th>Description</th></tr>
<tr><td rowspan="2">F</td><td>Enable the Drive</td></tr>
<tr><td>Enable the drive by writing a 1 to the SV_ON Modbus coil.
(Modbus Function Code 05: Write Single Coil)</td></tr>
<tr><td rowspan="2">G</td><td>Trigger the START Signal</td></tr>
<tr><td>Initiate an Index by writing a 1 to the START Modbus coil. This coil must be toggled from 0 – 1 each index.

Relevant Coils
<table>
<tr><th>Decimal Address</th><th>Hex Address</th><th>Name</th><th>Settings</th></tr>
<tr><td>12</td><td>0x000C</td><td>SV_ON</td><td>Enable the Drive</td></tr>
<tr><td>16</td><td>0x0010</td><td>START</td><td>Run the selected Index</td></tr>
<tr><td>20</td><td>0x0014</td><td>ISEL0</td><td>Index Select bit 0</td></tr>
<tr><td>21</td><td>0x0015</td><td>ISEL1</td><td>Index Select bit 1</td></tr>
<tr><td>22</td><td>0x0016</td><td>ISEL2</td><td>Index Select bit 2</td></tr>
<tr><td>23</td><td>0x0017</td><td>ISEL3</td><td>Index Select bit 3</td></tr>
<tr><td>24</td><td>0x0018</td><td>ISEL4</td><td>Index Select bit 4</td></tr>
<tr><td>25</td><td>0x0019</td><td>ISEL5</td><td>Index Select bit 5</td></tr>
</table></td></tr>
</table>

- Change the selected index by writing to the **ISELx** coils or 0x3009 (depending on your choice in step C).
- If serial commands are unsuccessful, make sure you are using Protocol Addressing (Base 0), and not PLC Addressing (Base 1).
- See section 15.2.2 in the User Manual for more digital input function definitions and addresses.

Relevant Index Registers

It is convenient to use Drive CM to set up the registers for each Index. But, if you need more flexibility than the 64 unique pre-programmed indexes, you can write to each Index value over Modbus.

Decimal Address	Hex Address	Parameter Names
12544	0x3100	Index00 start address
12562	0x3112	Index01 start address
12580	0x3124	Index02 start address
- - -		
13678	0x356E	Index63 start address

See section 15.3.11 in the User Manual for the starting addresses of all 64 Indexes.

Each Index consists of 12 separate variables. Note that there are a mix of units (signed/unsigned and 16/32 bit). The variables for each Index are grouped together according to this format.

Decimal Address	Hex Address	Parameter Names	Variable Types	Minimum Values	Maximum Values	Units	Accessibility
Index	Index	Number of Entries	UINT16	-	-	-	RW
Index+1	Index+0x01	Index Type	UINT16	0	10	-	RW
Index+2	Index+0x02	Distance	INT32	-2147483648	2147483647	UU	RW
Index+4	Index+0x04	Velocity	INT32	1	2147483647	UU/s	RW
Index+6	Index+0x06	Acceleration	INT32	1	2147483647	UU/s2	RW
Index+8	Index+0x08	Deceleration	INT32	1	2147483647	UU/s2	RW
Index+10	Index+0x0A	Registration Distance	INT32	-2147483648	2147483647	UU	RW
Index+12	Index+0x0C	Registration Velocity	INT32	1	2147483647	UU/s2	RW
Index+14	Index+0x0E	Repeat Count	UINT16	1	65535	-	RW
Index+15	Index+0x0F	Dwell Time	UINT16	0	65535	ms	RW
Index+16	Index+0x10	Next Index	UINT16	0	63	-	RW
Index+17	Index+0x11	Action	UINT16	0	2	-	RW

These are the actual addresses for Index 00 (from Section 15.3.11.1.1):

Decimal Address	Hex Address	Parameter Names	Variable Types	Minimum Values	Maximum Values	Units	Accessibility
12544	0x3100	Number of Entries	UINT16	-	-	-	RW
12545	0x3101	Index Type	UINT16	0	10	-	RW
12546	0x3102	Distance	INT32	-2147483648	2147483647	UU	RW
12548	0x3104	Velocity	INT32	1	2147483647	UU/s	RW
12550	0x3106	Acceleration	INT32	1	2147483647	UU/s2	RW
12552	0x3108	Deceleration	INT32	1	2147483647	UU/s2	RW
12554	0x310A	Registration Distance	INT32	-2147483648	2147483647	UU	RW
12556	0x310C	Registration Velocity	INT32	1	2147483647	UU/s2	RW
12558	0x310E	Repeat Count	UINT16	1	65535	-	RW
12559	0x310F	Dwell Time	UINT16	0	65535	ms	RW
12560	0x3110	Next Index	UINT16	0	63	-	RW
12561	0x3111	Action	UINT16	0	2	-	RW

In the above table, UU = User Units (pulses/revolution).

Definitions/Settings for **Number of Entries**, **Index Type**, and **Action** (from Section 3.2.2):

Parameter Names	Option	Values
Number of Entries		Read Only
Index Type	Linear Coordinates	0: Absolute Move 1: Relative Move 2: Registration Absolute Move 3: Registration Relative Move 4: Blending Absolute Move 5: Blending Relative Move
	Rotary Coordinates	6: Rotary Absolute Move 7: Rotary Relative Move 8: Rotary Shortest Move 9: Rotary Positive Move 10: Rotary Negative Move
Action		0: Stop 1: Wait for Start 2: Next Index