AUTOMATIONDIRECT.com

Do-more H2 Series PLC Hardware User Manual

Manual Number: H2-DM-M

Notes:

WARNING

Thank you for purchasing automation equipment from **Automationdirect.com®**, doing business as, **AutomationDirect**. We want your new automation equipment to operate safely. Anyone who installs or uses this equipment should read this publication (and any other relevant publications) before installing or operating the equipment.

To minimize the risk of potential safety problems, you should follow all applicable local and national codes that regulate the installation and operation of your equipment. These codes vary from area to area and usually change with time. It is your responsibility to determine which codes should be followed, and to verify that the equipment, installation, and operation is in compliance with the latest revision of these codes.

At a minimum, you should follow all applicable sections of the National Fire Code, National Electrical Code, and the codes of the National Electrical Manufacturer's Association (NEMA). There may be local regulatory or government offices that can also help determine which codes and standards are necessary for safe installation and operation.

Equipment damage or serious injury to personnel can result from the failure to follow all applicable codes and standards. We do not guarantee the products described in this publication are suitable for your particular application, nor do we assume any responsibility for your product design, installation, or operation.

Our products are not fault-tolerant and are not designed, manufactured or intended for use or resale as on-line control equipment in hazardous environments requiring fail-safe performance, such as in the operation of nuclear facilities, aircraft navigation or communication systems, air traffic control, direct life support machines, or weapons systems, in which the failure of the product could lead directly to death, personal injury, or severe physical or environmental damage ("High Risk Activities"). **AutomationDirect** specifically disclaims any expressed or implied warranty of fitness for High Risk Activities.

For additional warranty and safety information, see the Terms and Conditions section of our catalog. If you have any questions concerning the installation or operation of this equipment, or if you need additional information, please call us at 1-770-844-4200.

This publication is based on information that was available at the time it was printed. At **AutomationDirect** we constantly strive to improve our products and services, so we reserve the right to make changes to the products and/or publications at any time without notice and without any obligation. This publication may also discuss features that may not be available in certain revisions of the product.

Trademarks

This publication may contain references to products produced and/or offered by other companies. The product and company names may be trademarked and are the sole property of their respective owners. **AutomationDirect** disclaims any proprietary interest in the marks and names of others.

Copyright 2017, Automationdirect.com® Incorporated
All Rights Reserved

No part of this manual shall be copied, reproduced, or transmitted in any way without the prior, written consent of **Automationdirect.com® Incorporated**. **AutomationDirect** retains the exclusive rights to all information included in this document.

ADVERTENCIA

Gracias por comprar equipo de automatización de **Automationdirect.com®**. Deseamos que su nuevo equipo de automatización opere de manera segura. Cualquier persona que instale o use este equipo debe leer esta publicación (y cualquier otra publicación pertinente) antes de instalar u operar el equipo.

Para reducir al mínimo el riesgo debido a problemas de seguridad, debe seguir todos los códigos de seguridad locales o nacionales aplicables que regulan la instalación y operación de su equipo. Estos códigos varian de área en área y usualmente cambian con el tiempo. Es su responsabilidad determinar cuales códigos deben ser seguidos y verificar que el equipo, instalación y operación estén en cumplimiento con la revisión mas reciente de estos códigos.

Como mínimo, debe seguir las secciones aplicables del Código Nacional de Incendio, Código Nacional Eléctrico, y los códigos de (NEMA) la Asociación Nacional de Fabricantes Eléctricos de USA. Puede haber oficinas de normas locales o del gobierno que pueden ayudar a determinar cuales códigos y normas son necesarios para una instalación y operación segura.

Si no se siguen todos los códigos y normas aplicables, puede resultar en daños al equipo o lesiones serias a personas. No garantizamos los productos descritos en esta publicación para ser adecuados para su aplicación en particular, ni asumimos ninguna responsabilidad por el diseño de su producto, la instalación u operación.

Nuestros productos no son tolerantes a fallas y no han sido diseñados, fabricados o intencionados para uso o reventa como equipo de control en línea en ambientes peligrosos que requieren una ejecución sin fallas, tales como operación en instalaciones nucleares, sistemas de navegación aérea, o de comunicación, control de tráfico aéreo, máquinas de soporte de vida o sistemas de armamentos en las cuales la falla del producto puede resultar directamente en muerte, heridas personales, o daños físicos o ambientales severos ("Actividades de Alto Riesgo"). **Automationdirect.com** específicamente rechaza cualquier garantía ya sea expresada o implicada para actividades de alto riesgo.

Para información adicional acerca de garantía e información de seguridad, vea la sección de Términos y Condiciones de nuestro catálogo. Si tiene alguna pregunta sobre instalación u operación de este equipo, o si necesita información adicional, por favor llámenos al número 1-770-844-4200 en Estados Unidos.

Esta publicación está basada en la información disponible al momento de impresión. En **Automationdirect.com** nos esforzamos constantemente para mejorar nuestros productos y servicios, así que nos reservamos el derecho de hacer cambios al producto y/o a las publicaciones en cualquier momento sin notificación y sin ninguna obligación. Esta publicación también puede discutir características que no estén disponibles en ciertas revisiones del producto.

Marcas Registradas

Esta publicación puede contener referencias a productos producidos y/u ofrecidos por otras compañías. Los nombres de las compañías y productos pueden tener marcas registradas y son propiedad única de sus respectivos dueños. Automationdirect.com, renuncia cualquier interés propietario en las marcas y nombres de otros.

PROPIEDAD LITERARIA 2017, AUTOMATIONDIRECT.COM® INCORPORATED
Todos los derechos reservados

No se permite copiar, reproducir, o transmitir de ninguna forma ninguna parte de este manual sin previo consentimiento por escrito de **Automationdirect.com® Incorprated**. **Automationdirect.com** retiene los derechos exclusivos a toda la información incluida en este documento. Los usuarios de este equipo pueden copiar este documento solamente para instalar, configurar y mantener el equipo correspondiente. También las instituciones de enseñanza pueden usar este manual para propósitos educativos.

AVERTISSEMENT

Nous vous remercions d'avoir acheté l'équipement d'automatisation de **Automationdirect.com®**, en faisant des affaires comme, **AutomationDirect**. Nous tenons à ce que votre nouvel équipement d'automatisation fonctionne en toute sécurité. Toute personne qui installe ou utilise cet équipement doit lire la présente publication (et toutes les autres publications pertinentes) avant de l'installer ou de l'utiliser.

Afin de réduire au minimum le risque d'éventuels problèmes de sécurité, vous devez respecter tous les codes locaux et nationaux applicables régissant l'installation et le fonctionnement de votre équipement. Ces codes diffèrent d'une région à l'autre et, habituellement, évoluent au fil du temps. Il vous incombe de déterminer les codes à respecter et de vous assurer que l'équipement, l'installation et le fonctionnement sont conformes aux exigences de la version la plus récente de ces codes.

Vous devez, à tout le moins, respecter toutes les sections applicables du Code national de prévention des incendies, du Code national de l'électricité et des codes de la National Electrical Manufacturer's Association (NEMA). Des organismes de réglementation ou des services gouvernementaux locaux peuvent également vous aider à déterminer les codes ainsi que les normes à respecter pour assurer une installation et un fonctionnement sûrs.

L'omission de respecter la totalité des codes et des normes applicables peut entraîner des dommages à l'équipement ou causer de graves blessures au personnel. Nous ne garantissons pas que les produits décrits dans cette publication conviennent à votre application particulière et nous n'assumons aucune responsabilité à l'égard de la conception, de l'installation ou du fonctionnement de votre produit.

Nos produits ne sont pas insensibles aux défaillances et ne sont ni conçus ni fabriqués pour l'utilisation ou la revente en tant qu'équipement de commande en ligne dans des environnements dangereux nécessitant une sécurité absolue, par exemple, l'exploitation d'installations nucléaires, les systèmes de navigation aérienne ou de communication, le contrôle de la circulation aérienne, les équipements de survie ou les systèmes d'armes, pour lesquels la défaillance du produit peut provoquer la mort, des blessures corporelles ou de graves dommages matériels ou environnementaux («activités à risque élevé»). La société **AutomationDirect** nie toute garantie expresse ou implicite d'aptitude à l'emploi en ce qui a trait aux activités à risque élevé.

Pour des renseignements additionnels touchant la garantie et la sécurité, veuillez consulter la section Modalités et conditions de notre documentation. Si vous avez des questions au sujet de l'installation ou du fonctionnement de cet équipement, ou encore si vous avez besoin de renseignements supplémentaires, n'hésitez pas à nous téléphoner au 1-770-844-4200.

Cette publication s'appuie sur l'information qui était disponible au moment de l'impression. À la société **AutomationDirect**, nous nous efforçons constamment d'améliorer nos produits et services. C'est pourquoi nous nous réservons le droit d'apporter des modifications aux produits ou aux publications en tout temps, sans préavis ni quelque obligation que ce soit. La présente publication peut aussi porter sur des caractéristiques susceptibles de ne pas être offertes dans certaines versions révisées du produit.

Marques de commerce

La présente publication peut contenir des références à des produits fabriqués ou offerts par d'autres entreprises. Les désignations des produits et des entreprises peuvent être des marques de commerce et appartiennent exclusivement à leurs propriétaires respectifs. **AutomationDirect** nie tout intérêt dans les autres marques et désignations.

Copyright 2017, Automationdirect.com® Incorporated
Tous droits réservés

Nulle partie de ce manuel ne doit être copiée, reproduite ou transmise de quelque façon que ce soit sans le consentement préalable écrit de la société **Automationdirect.com® Incorporated**. **AutomationDirect** conserve les droits exclusifs à l'égard de tous les renseignements contenus dans le présent document.

Notes:

Do-more H2 Series PLC User Manual

AUTOMATIONDIRECT.com

Please include the Manual Number and the Manual Issue, both shown below, when communicating with Technical Support regarding this publication.

Manual Number: H2-DM-M

Issue: 1st Edition, Revision F

Issue Date: 06/18

Publication History		
Issue	**Date**	**Description of Changes**
1st Edition	9/12	Original
Revision A	9/12	Minor corrections made throughout manual
Revision B	02/13	Added H2-ERM100 module data Minor corrections made throughout manual
Revision C	08/13	Added Ethernet Expansion I/O section Minor corrections made throughout manual
Revision D	3/17	General Update of Manual
Revision E	12/17	H2-CTRIO discontinued, added notes.
Revision F	06/18	Corrected 2's complement data format selection.

Notes:

TABLE OF CONTENTS

Chapter 1 - Getting Started

Introduction **1–2**
Purpose of this Manual 1–2
Purpose of this Chapter 1–2
Online Help Files and Other Documentation 1–2
Technical Support 1–2

Conventions Used **1–3**
Key Topics for Each Chapter 1–3

Before You Begin **1–4**
Do-more! PLC System Components 1–5
Do-more! Designer Software System Requirements 1–5

Step 1: Install Do-more Designer Software **1–6**

Step 2: Launch Do-more! Designer Software **1–9**

Step 3: Install Hardware **1–11**

Step 4: Apply Power to the Do-more! PLC **1–12**

Step 5: Establish Communication **1–13**

Step 6: Verify Hardware Configuration **1–19**

Step 7: Create a Ladder Logic Program **1–23**
Rung #1 1–23
Rung #2 1–26

Step 8: Save a Project **1–28**

Step 9: Write Project to the Do-more PLC **1–28**

Step 10: Testing Project Using Data View **1–29**

Accessing the Help File **1–31**

Chapter 2 -Do-more! H2 Series PLC Overview

Do-more H2 Series PLC Overview 2–2
Do-more/DL205 System Compatibility 2–3
Communications 2–4

Chapter 3 Specifications: CPU Modules

CPU Specifications 3–2
CPU General Specifications 3–2
Communications Ports Specifications 3–4
Port 1 Specifications (USB) 3–4
Port 2 Specifications (Serial) 3–4
USB Type B Slave Input Specifications 3–4
Port 3 Specifications (Ethernet) 3–5
Ethernet Specifications 3–5
Ethernet Expansion I/O 3–6
Status Indicators 3–8
Mode Switch Functions 3–8
DIP Switch Specifications 3–9
Battery Replacement 3–12

Chapter 4 - Specifications: Base Units

Base Unit Overview 4–2
Choosing a Base Type 4–2
AC Powered Base Units 4–3
24VDC Powered Base Units 4–4
125VDC Powered Base Units 4–5
Power Budget 4–6
Power Budget Example 4–6
Power Requirements 4–7

Discrete I/O Modules Overview **5–3**
Discrete Input Modules 5–3
Discrete Output Modules 5–4
Discrete Input/Output Module 5–4
D2-08ND3, DC Input **5–5**
D2-16ND3-2, DC Input **5–6**
D2–32ND3, DC Input **5–7**
D2–32ND3–2, DC Input **5–8**
D2–08NA-1, AC Input **5–9**
D2-08NA-2, AC Input **5–10**
D2-16NA, AC Input **5–11**
D2-04TD1, DC Output **5–12**
D2–08TD1, DC Output **5–13**
D2–08TD2, DC Output **5–14**
D2–16TD1–2, DC Output **5–15**
D2–16TD2–2, DC Output **5–16**
F2–16TD1P, DC Output With Fault Protection **5–17**
F2–16TD2P, DC Output with Fault Protection **5–19**
D2–32TD1, DC Output **5–21**
D2–32TD2, DC Output **5–22**
F2–08TA, AC Output **5–23**
D2–08TA, AC Output **5–24**
D2–12TA, AC Output **5–25**
D2–04TRS, Relay Output **5–26**
D2–08TR, Relay Output **5–27**
F2–08TR, Relay Output **5–28**
F2–08TRS, Relay Output **5–29**
D2–12TR, Relay Output **5–30**
D2–08CDR, 4 pt. DC Input / 4pt. Relay Output **5–31**

Chapter 6 - Specifications: Analog I/O Modules

Analog I/O Modules Overview **6–3**
Analog Input Modules 6–3
Analog Output Modules 6–4
Analog Input/Output Module 6–4
How to Access the Analog I/O Modules 6–5
F2-04AD-1(L) Analog Input **6–7**
Setting the Module Jumpers 6–8
F2-04AD-1(L) Addressing 6–9
F2-04AD-2(L), Analog Input **6–10**
Setting the Module Jumpers 6–11
F2-04AD-2(L) Addressing 6–12
F2-08AD-1, Analog Input **6–13**
Setting the Module Jumpers 6–14
F2-08AD-1 Addressing 6–15
F2-08AD-2, Analog Input **6–16**
Setting the Module Jumpers 6–17
F2-08AD-2 Addressing 6–18
F2-04RTD **6–19**
Setting the Module Jumpers 6–20
F2-04RTD Addressing 6–22
F2-04THM **6–23**
Setting the Module Jumpers 6–25
F2-02DA-1(L), Analog Output **6–29**
F2-02DA-2(L), Analog Output **6–31**
Unipolar Ranges 6–34
Bipolar Ranges 6–34
F2-02DAS-1, Analog Output **6–35**
F2-02DAS-2, Analog Output **6–37**
Setting the Module Jumpers 6–38
F2–08DA–1, Analog Output **6–40**
F2-08DA-2, Analog Output **6–42**
Setting the Module Jumpers 6–43

F2–4AD2DA, Analog Input/Output 6–45
Input 6–47
Output 6–47
F2-8AD4DA-1 Analog Input/Output 6–48
Input 6–51
Output 6–51
Input Configuration Using Do-more Designer Version 1.1 or Newer 6–52
Input Resolution Selection (WYn+4) 6–53
Input Track and Hold Selection (WYn+6) 6–54
F2-8AD4DA-2 Analog Input/Output 6–55
Input 6–58
Output 6–58
Input Configuration Using Do-more Designer Version 1.1 or Newer 6–59
Input Resolution Selection (WYn+4) 6–60
Input and Output Range Selection (WYn+5) 6–61
Input Track and Hold Selection (WYn+6) 6–62

Chapter 7 - Specifications: Specialty Modules

Specialty Modules Overview 7–3
Specialty Modules 7–3
H2-CTRIO(2) 7–5
H2-CTRIO(2) Overview 7–5
H2-CTRIO(2) Specifications 7–7
H2-CTRIO(2) LED Indicators 7–8
H2-CTRIO(2) Jumper Setup 7–9
H2-CTRIO 7–9
H2-CTRIO2 7–9
Wiring Information 7–10
PNP Field Device (source) 7–10
NPN Field Device (sink) 7–10
H2-CTRIO(2) Input Wiring Examples 7–11
TTL Quadrature Encoder Field Wiring 7–11
TTL Input Wiring Example 7–11
Quadrature Encoder Wiring Example 7–12
NPN Open Collector Device 7–12

PNP Open Collector Device 7–12
H2-CTRIO(2) Output Wiring Examples 7–13
H2-ECOM100 7–14
H2-ECOM100 Overview 7–14
H2-ECOM100 Specifications 7–14
H2-ECOM100 LED Indicators 7–15
H2-ECOM100 Network Identifiers 7–15
H2-ECOM100 Network Layouts 7–18
H2-ECOM100 Network Cabling 7–19
H2-ERM(100)/ H2-EBC100 7–22
H2-ERM(100) Overview 7–22
H2-ERM(100) Specifications 7–22
H2-ERM(100) LED Indicators 7–23
H2-EBC100 Overview 7–23
H2-EBC100 Specifications 7–23
H2-EBC100 LED Indicators 7–24
H2-ERM(100)/H2-EBC100 Network Identifiers 7–24
H2-ERM(100)/H2-EBC100 Network Layouts 7–27
H2-ERM(100)/H2-EBC100 Network Cabling 7–28
H2-SERIO(-4 .) 7–30
H2-SERIO(-4) Overview 7–30
H2-SERIO(-4) Specifications 7–32
H2-SERIO(-4) Wiring: RS-232 7–32
H2-SERIO-4 Wiring: RS-422/485 7–33
F2-08SIM, Input Simulator 7–34
F2-08SIM Specifications 7–34

Chapter 8 - Installation and Wiring

Safety Guidelines 8–3
Plan for Safety 8–3
Three Levels of Protection 8–4
Emergency Stops 8–4
Emergency Power Disconnect 8–5
Orderly System Shutdown 8–5
Class 1, Division 2, Approval 8–5

Mounting Guidelines **8–6**
Base Dimensions 8–6
Panel Mounting and Layout 8–7
Enclosures 8–8
Environmental Specifications 8–9
Marine Use 8–9
Agency Approvals 8–9
24VDC Power Bases 8–9
Installing Bases for Do-more **8–10**
Mounting the Base 8–10
Using Mounting Rails 8–10
Installing Components in the Base **8–11**
Base Wiring Guidelines **8–12**
Base Wiring 8–12
I/O Modules Position and Wiring **8–13**
Slot Numbering 8–13
Module Placement Restrictions 8–13
Wiring the Different Module Connectors 8–14
I/O Wiring Checklist 8–15
ZIPLink Wiring System **8–16**
I/O Wiring Strategies **8–18**
PLC Isolation Boundaries 8–18
Powering I/O Circuits with the Auxiliary Supply 8–19
Powering I/O Circuits Using Separate Supplies 8–20
Sinking / Sourcing Concepts 8–21
I/O "Common" Terminal Concepts 8–22
Connecting DC I/O to "Solid State" Field Devices 8–23
Solid State Input Sensors 8–23
Solid State Output Loads 8–23
Relay Output Guidelines 8–25
Relay Outputs –
Transient Suppression for Inductive Loads in a Control System 8–26

Appendix A - Do-more Product Weight Table

Do-more Product Weight Table A-2

Appendix B - European Union Directives (CE)

European Union (EU) Directives B-2
Basic EMC Installation Guidelines B-5

Getting Started

Chapter 1

In This Chapter...

Introduction **1–2**
Purpose of this Manual 1–2
Purpose of this Chapter 1–2
Online Help Files and Other Documentation 1–2
Technical Support 1–2
Conventions Used **1–3**
Key Topics for Each Chapter 1–3
Before You Begin **1–4**
Do-more! PLC System Components 1–5
Do-more! Designer Software System Requirements 1–5
Step 1: Install Do-more Designer Software **1–6**
Step 2: Launch Do-more! Designer Software **1–9**
Step 3: Install Hardware **1–11**
Step 4: Apply Power to the Do-more! PLC **1–12**
Step 5: Establish Communication **1–13**
Step 6: Verify Hardware Configuration **1–19**
Step 7: Create a Ladder Logic Program **1–23**
Rung #1 1–23
Rung #2 1–26
Step 8: Save a Project **1–28**
Step 9: Write Project to the Do-more PLC **1–28**
Step 10: Testing Project Using Data View **1–29**
Accessing the Help File **1–31**

1

Introduction

Purpose of this Manual

Thank you for purchasing from our Do-more PLC family of products. This manual shows you how to install, set up, program, troubleshoot and maintain your Do-more PLC. For installation personnel, this manual contains information on power and signal wiring, mounting details and configuration procedures.

This manual can be very helpful as a quick reference guide for those who are experienced in PLCs. For those who may be new to PLCs or our products, reading this manual will give you an understanding of the variety of features available with the Do-more PLC.

Purpose of this Chapter

This chapter will guide you through the basic set up of a Do-more H2 Series PLC. It contains step by step instructions on installing the programming software, installing and configuring your hardware, applying power to the PLC, establishing a communications link, and creating, saving and writing a project to the CPU. Once these steps are completed, your Do-more PLC will be running a ladder logic project that you have programmed.

Online Help Files and Other Documentation

Do-more Designer, the Do-more PLC programming software, is available for free download from our website at:

http://www.automationdirect.com

The software includes searchable online help topics covering all aspects of the software, instruction set, module set up and communication.

Technical Support

We strive to make our manuals the best in the industry. We rely on your feedback to let us know if we are reaching our goal. If you cannot find the solution to your particular application, or, if for any reason you need technical assistance, please call us at:

770-844-4200

Our technical support group will work with you to answer your questions. They are available Monday through Friday from 9:00 A.M. to 6:00 P.M. Eastern Time. We also encourage you to visit our web site where you can find technical and non-technical information about our products and our company.

http://www.automationdirect.com

Conventions Used

When you see the "note pad" icon in the left-hand margin, the paragraph to its immediate right will be a special note. Notes represent information that may make your work quicker or more efficient. The word ***NOTE:*** *in boldface will mark the beginning of the text.*

When you see the "exclamation point" icon in the left-hand margin, the paragraph to its immediate right will be a warning. This information could prevent injury, loss of property, or even death in extreme cases. Any warning in this manual should be regarded as critical information that should be read in its entirety. The word WARNING in boldface will mark the beginning of the text.

Key Topics for Each Chapter

The beginning of each chapter will list the key topics that can be found in that chapter.

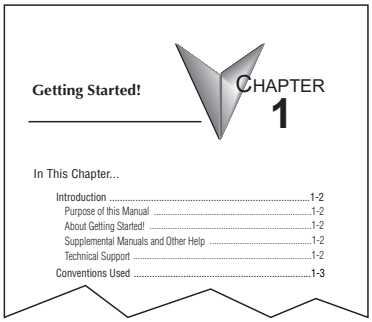
Getting Started!

CHAPTER 1

In This Chapter...

Introduction 1-2
Purpose of this Manual 1-2
About Getting Started! 1-2
Supplemental Manuals and Other Help 1-2
Technical Support 1-2
Conventions Used 1-3

1

Before You Begin

It is recommended that the following items be available to make this short step-by-step introduction to the Do-more PLC go smoothly.

Example Do-more PLC

PC Running Windows XP, Vista, Windows 7, Windows 8

Not available from Automationdirect.com.

Do-more! Designer Programming Software

Download software from our webste at: http://www.automationdirect.com

USB-A to USB-B Programming Cable

You can also use an Ethernet or Serial (D2-DSCBL) cable for programming, but we recommend using a USB cable; just plug it in and it works.

Screwdriver TW-SD-VSL-1

Wire Strippers DN-WS

Hookup Wire

AC Power Cord

Not available from Automationdirect.com.

Do-more! PLC System Components

The Do-more H2 Series CPU modules were designed to stand in place of the DL205 series PLC. As a result, this CPU easily integrates with DL205 PLC family components. The following is a summary of the major parts of a Do-more H2 Series PLC.

CPU

H2-DM1/H2-DM1E

Bases

The Do-more H2 Series CPU module can be placed into any DL205 PLC family base. The four base sizes available are 3, 4, 6 and 9 slot. All bases include a built-in power supply and can be purchased for use with AC or DC sources. The Do-more H2 Series PLC supports local and Ethernet remote I/O configurations only.

***NOTE**: The Do-more H2 Series PLC does not support local expansion I/O.*

I/O Modules

The DL205 PLC family has some of the most powerful I/O modules in the industry. A complete range of discrete modules which support 24VDC, 110/220 VAC and up to 10A relay outputs (subject to derating) are offered. The analog modules provide 12 and 16 bit resolution and several selections of input and output signal ranges (including bipolar). Several specialty modules are also available.

Do-more! Designer Software System Requirements

The Do-more! Designer Windows-based programming software works with Windows® XP (Home or Professional, 32-bit), Vista (Home, Basic, Premium, 32 or 64-bit), Windows 7 (Home, Professional, Ultimate, 32 or 64-bit), Windows 8 & 10 (Home, Professional, Enterprise 32 or 64-bit; Windows 8 RT edition is NOT supported).

Please check the following requirements when choosing your PC configuration:

- Minimum PC to PLC Connectivity, at least one of the following:
  - USB Port: connects to the CPU with USB-A connector (USB-A to USB-B cable)
  - RS-232 Serial Port: connects to the CPU with RJ-12 connector (RJ-12 to DB9 or RJ-12 to USB-B serial converter cable)
  - Ethernet Port: connects to the CPU (H2-DM1E) with RJ-45 10Base-T or 100Base-T (Cat5 Patch Cable)
- Hard Disk: 100MB free disk space
- Video Display: 1024x768, 256 colors resolution (1280x720, true color recommended)
- Windows XP, 32-bit:
  - 800MHz, single core CPU (2GHz, multi-core or hyper-threaded recommended)
  - 512MB RAM (2GB recommended)
- Vista, Windows 7 or Windows 8 & 10, 32 or 64-bit:
  - 1GHz, single core CPU (2GHz, multi-core recommended)
  - 1GB RAM (3GB recommended)

***NOTE:** The PC/Laptop/Ethernet Switch connector at the "opposite end" of the PLC connector will dictate what kind of cable you need.*

1

Step 1: Install Do-more Designer Software

Download the Do-more Designer programming software (DM-PGMSW) from our website at **http://automationdirect.com** and launch the install procedure.

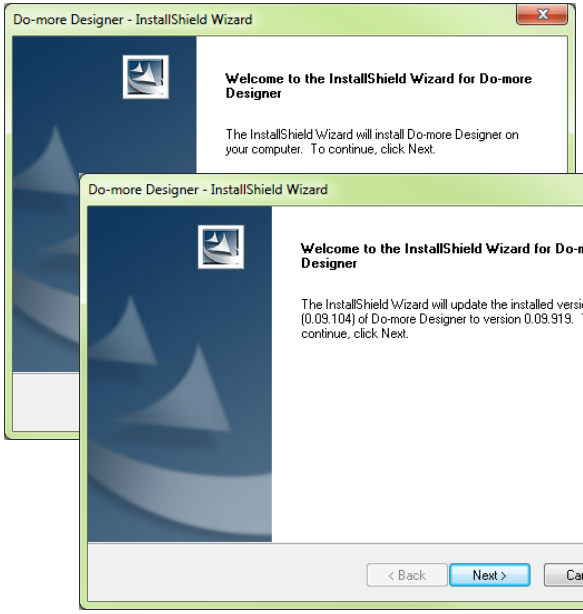

The first screen that opens is the Welcome screen seen here. If there are previous versions of this software already installed, this screen will detail the version number of the software being replaced and the one being installed, click Next to continue.

An alert window will appear requesting that all anti-virus software be disabled and also reminding the user that Administrative restrictions may exist.

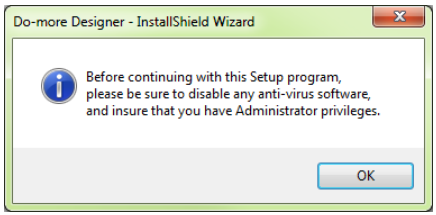

The License Agreement window will be displayed next. Read over the agreement, select "I accept the terms of the license agreement" and click the Next button to continue.

There is also the option to print the license agreement if desired. The print function will print the license agreement to a pdf file and save it in the location you choose.

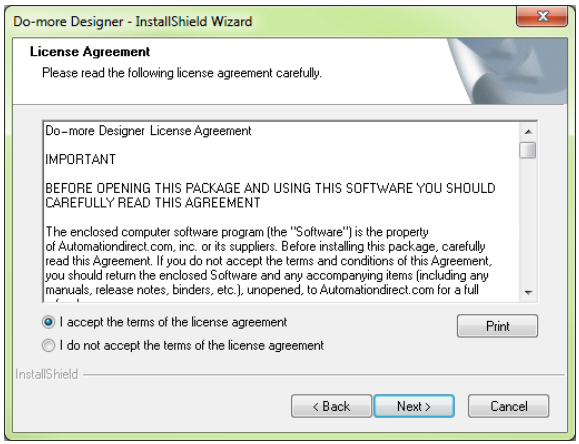

Now the software will ask a little about you. Please fill in the information requested on the Customer Information screen and click Next to continue.

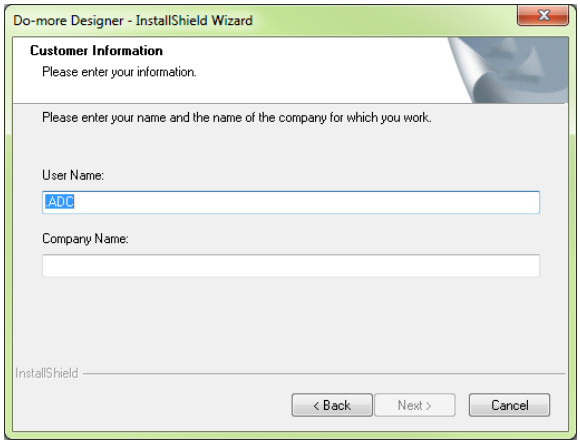

At this stage, the software will ask which type of install you would like to perform. The Select Type window seen below gives two options for installation type: Complete and Custom.

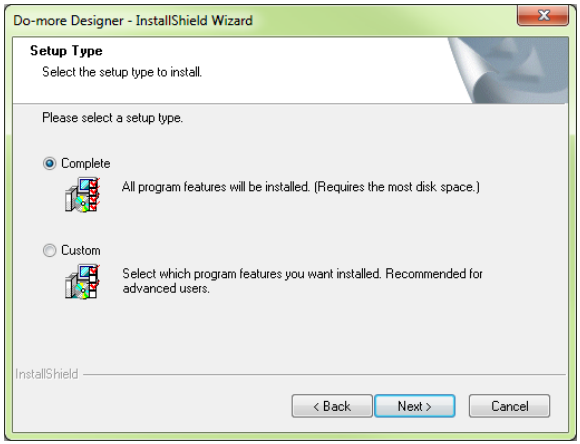

Custom installation allows you to choose which program features to install, whereas Complete installation installs all of the program features available. The Complete installation is selected by default and is recommended for first-time users.

Select the installation type desired and click the Next button to continue.

The next screen to appear is the Ready to Install the Program window. This window is an alert window, cautioning you that the program is about to be installed. If there are any changes that need to be made to the install settings do them now before continuing.

To review or change any of the previous installation selections, click the Back button to return to the appropriate window and make the change. If no changes are necessary click the Install button to begin the installation.

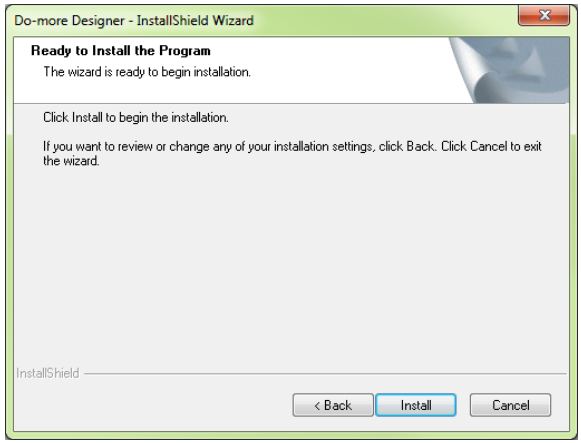

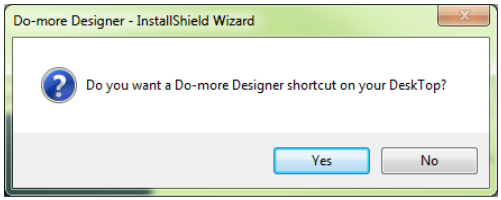

The popup shown here will allow you to choose whether or not to install a shortcut for the software on your PC's desktop. Click Yes or No to continue with the installation.

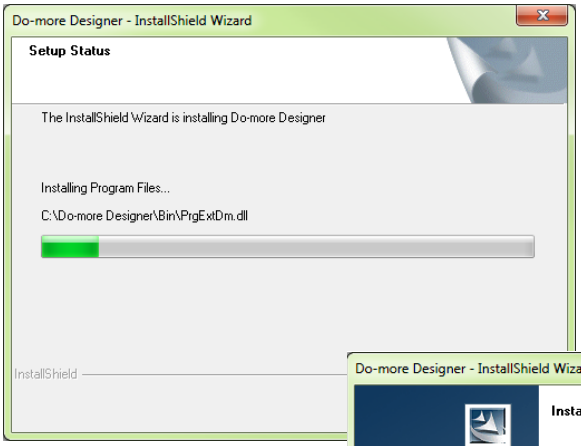

The software will now install the needed files and folders with the Setup Status window detailing the status of the installation.

Once the installation has been successfully completed, the window below will open. Your software is now installed and ready to use. The installation wizard can now be closed by clicking the Finish button at the bottom of the window.

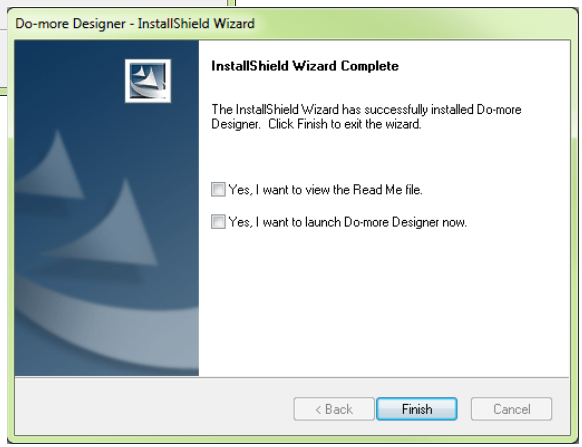

Step 2: Launch Do-more! Designer Software

After installing Do-more! Designer, launch the software by double clicking the desktop DM icon.

You can also launch the software from the PC's Start menu or All Programs menu. If the software link is not embedded in the Start menu, use the path: Start > All Programs > Do-more > Designer x.x > Do-more Designer x.x to launch the software.

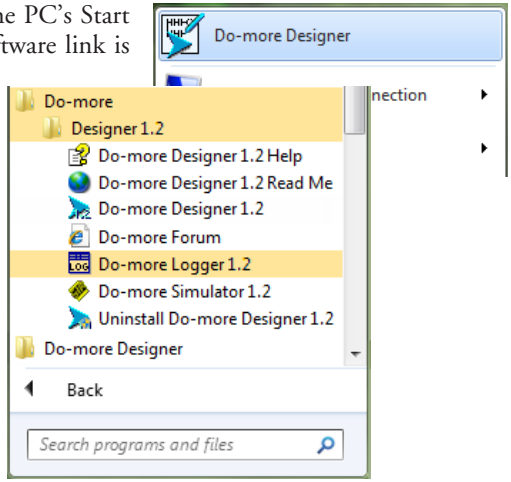

The Do-more! Designer Software will start up and display the Start Page shown below. This page consists of a Launchpad with quick links to existing projects, software applications and communications links. There is also a section containing shortcuts to important help file topics and the Do-more! Designer simulator application.

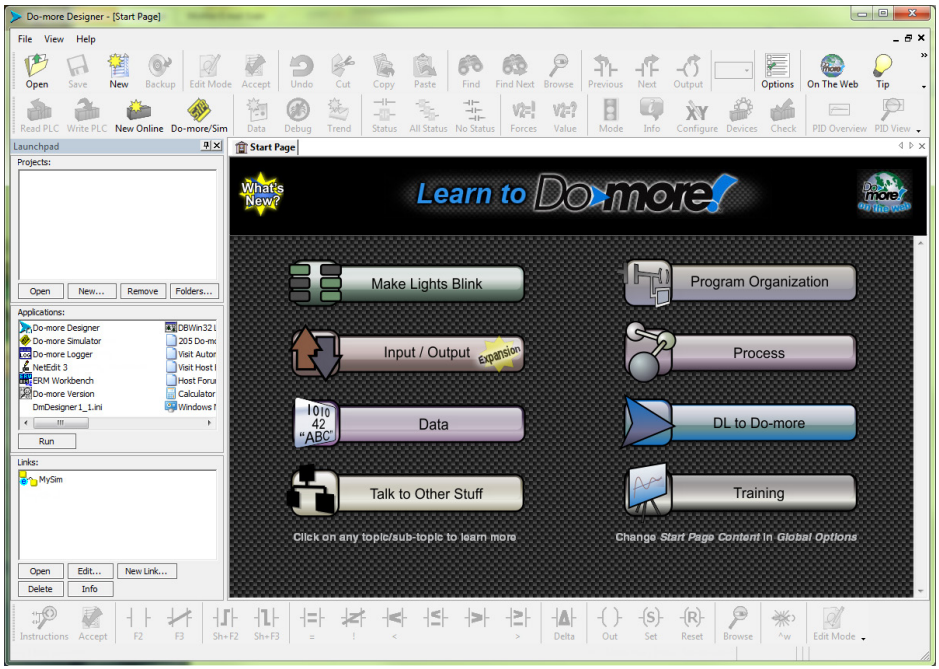

To begin a new project offline select New from the toolbar on the Start Page. The New Project window seen here will open.

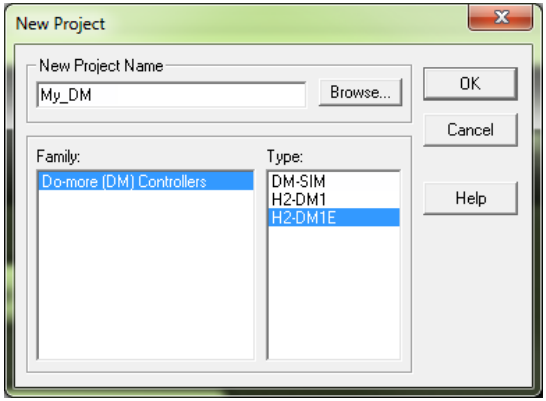

Name the new project and select the type of controller it is intended for. You can use the Browse button to choose a different location to store the project or use the default location. Click OK after your selections have been made to continue. The Main programming window and Instruction Palette shown below will open.

The Instruction Palette lists all of the instructions available for use in your program. A brief explanation of each instruction is provided once the instruction is highlighted and a more detailed explanation is available in the help file.

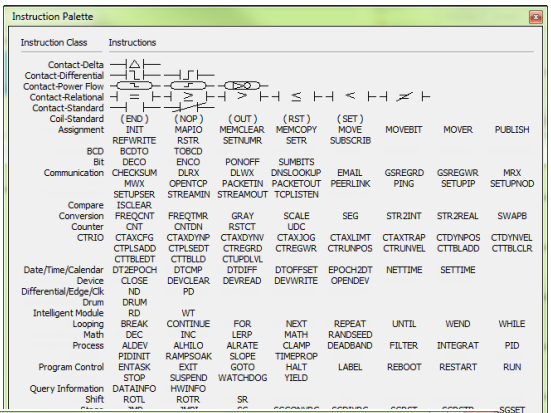

The Main programming window is divided into menus and toolbars for quick access to configurations, instructions and other needed items used during project development.

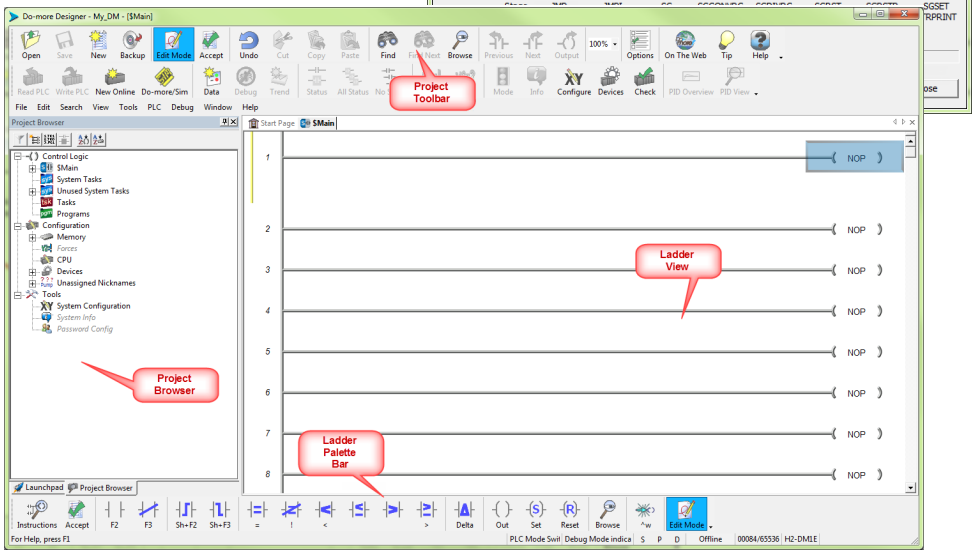

Step 3: Install Hardware

The "Installation and Wiring" chapter of this manual contains detailed information for the installation of components in your Do-more! PLC system. The following summary explains the basic steps for installing modules in a base.

First slide the module retaining clips to the out position and align the PC board(s) of the module with the grooves on the top and bottom of the base. Push the module straight into the base until it is firmly seated in the backplane connector. Once the module is inserted into the base, push in the retaining clips to firmly secure the module to the base.

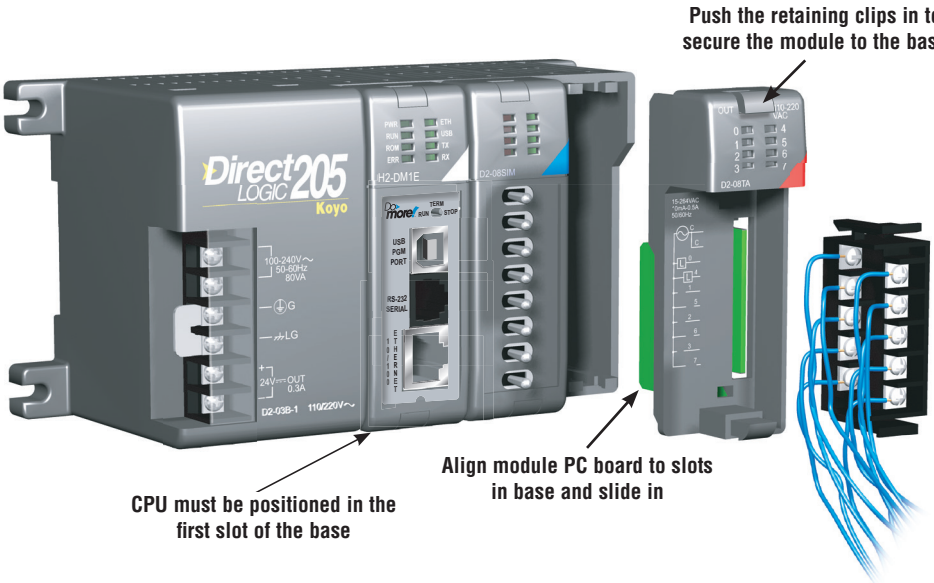

WARNING: Minimize the risk of electrical shock, personal injury, or equipment damage. Always disconnect the system power before installing or removing any system component.

Once all of the modules have been installed in the base, connect the USB cable. Use a standard USB cable with Type A and Type B connectors. (Ethernet and Serial connections are also available, but are not shown for this example.)

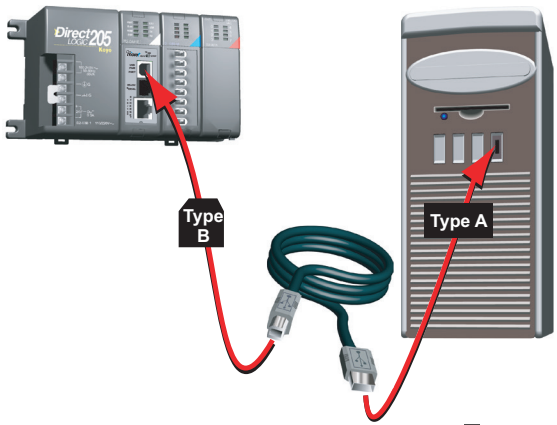

1

Step 4: Apply Power to the Do-more! PLC

Power is supplied to the Do-more! PLC through the backplane of the base from the power supply. The following diagrams show the terminal connections located on the power supplies of the DL205 bases. The base terminals can accept up to 16AWG. You may be able to use larger wiring depending on the type of wire used, but 16AWG is the recommended size. Do not over-tighten the connector screws; the recommended torque value is 7.81 lb·in (0.882 N·m).

110/220 VAC Base Terminal Strip

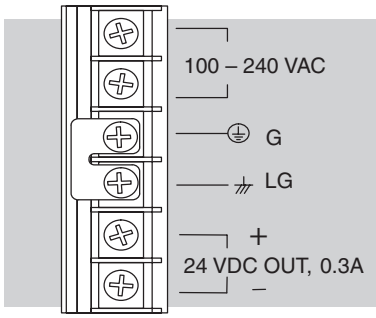

NOTE: *You can connect either a 115VAC or 220VAC supply to the AC terminals.*

12/24 VDC Base Terminal Strip

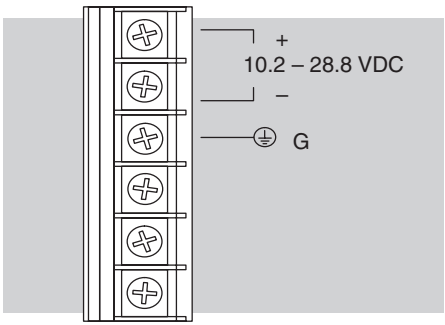

125 VDC Base Terminal Strip

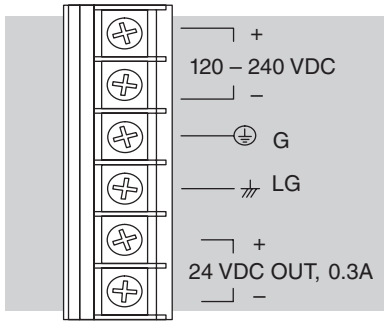

Once all of the power wiring has been completed and verified, connect the appropriate voltage source to the power supply and power up the controller. The Do-more PLC will perform a self evaluation once power is applied. Refer to the "Installation and Wiring" chapter of this manual for more power supply and input wiring information.

Step 5: Establish Communication

Now that the Do-more PLC is powered up, you need to establish a communications link between the PC and the PLC. The Do-more! Designer software provides a Link Wizard to assist you with configuring this new communications link. To open the Link Wizard, select the New Link... button in the Links section of the Main Page's Launchpad as shown below.

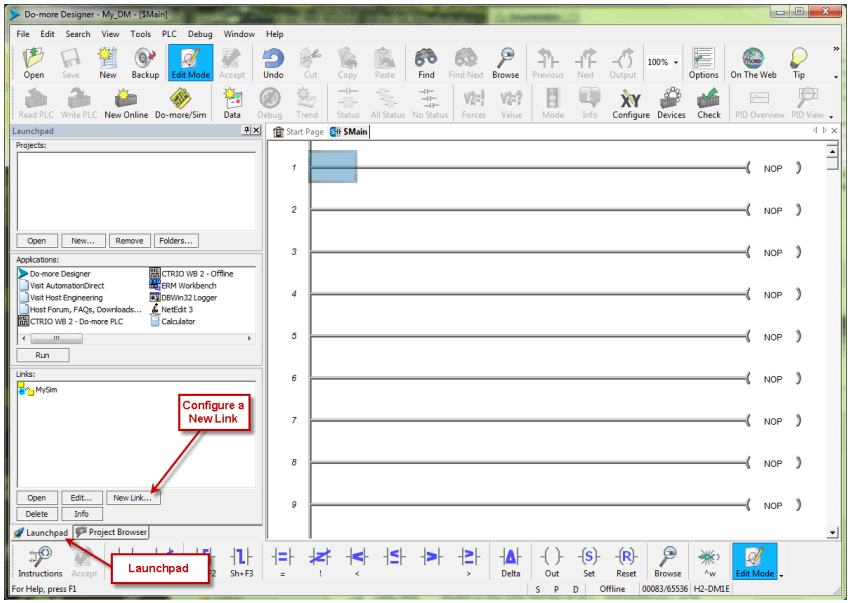

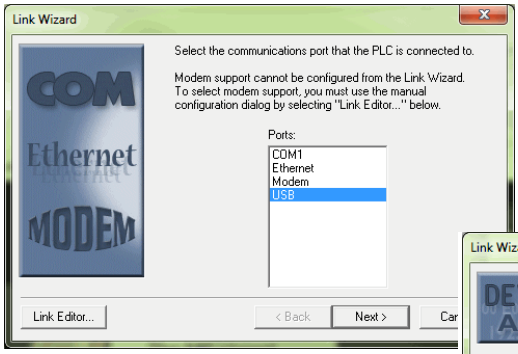

The Link Wizard will first ask you to choose which communications port you will be using. In this example, we will be using a USB connection. Select USB, click Next and the wizard will automatically search for available CPU's on that port.

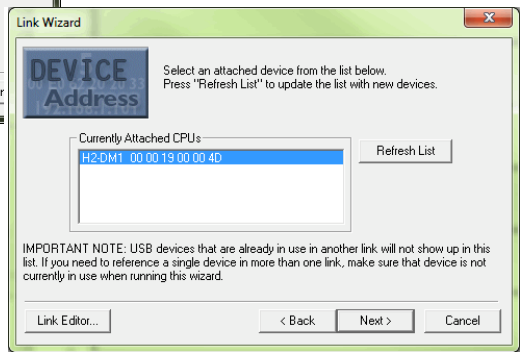

Choose the CPU that you are programming and select Next. The Do-more Designer software will create a link to that controller.

The Link Wizard will now display the saved settings for this link as seen on following page.

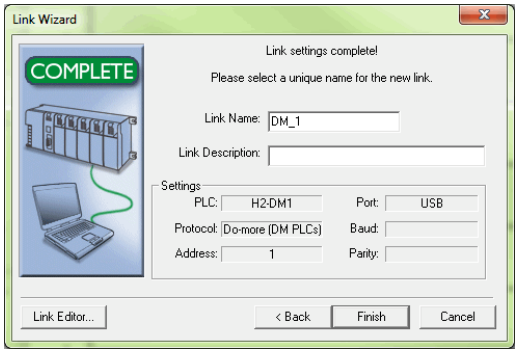

A unique name is required for each link that is created. Name the new link and, if desired, give it a description then select Finish.

You can also manually configure each link by selecting the Link Editor... button from the lower left corner of the Link Wizard. The Configure Link dialog will open, as seen below, allowing you to select PLC types, port parameters, and protocols.

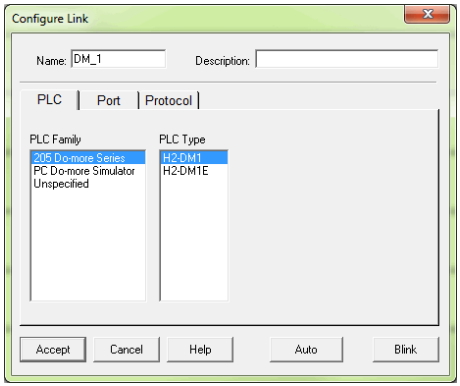

Once you have completed configuring your communications link, either manually with the Link Editor or automatically with the Link Wizard, it will be available to select in the Links section of the Launchpad. There you can edit, enable/disable, delete or view statistics for that link.

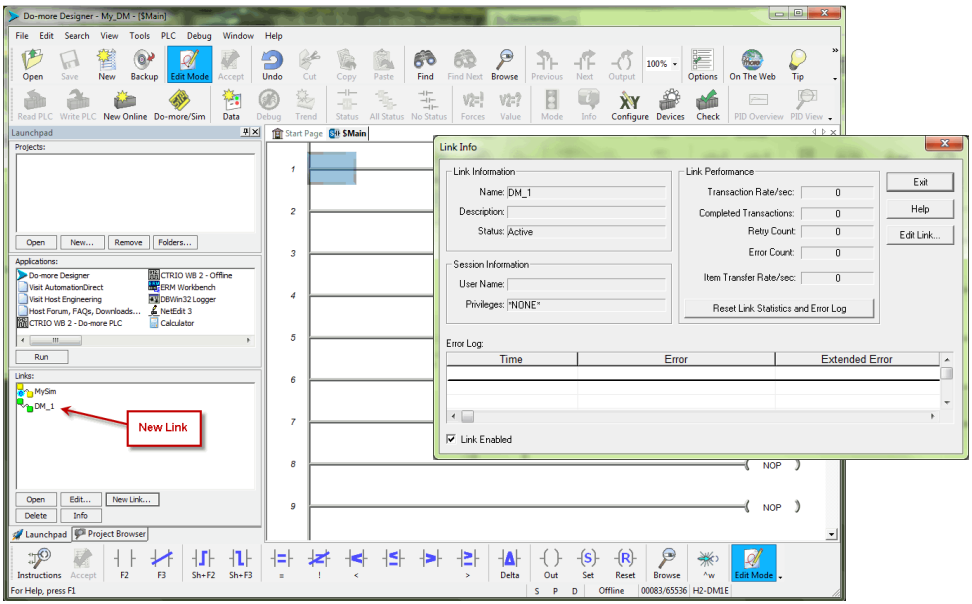

Select the New Online button and the Online dialog box, seen below, will open. From this dialog, you are given available communications links to choose from with options to add, edit disable/enable, or delete links.

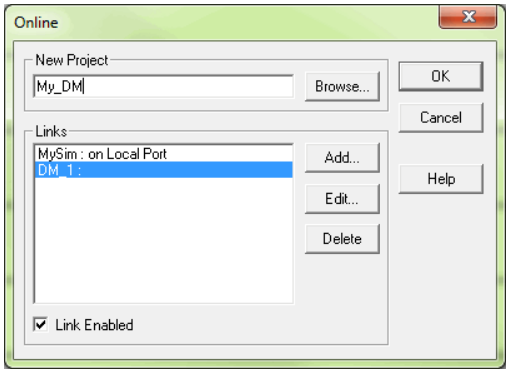

Choose the appropriate link, select OK and the software will connect to the Do-more PLC. If the mode selector switch on the CPU module is not in the Term position when connecting, the warning shown below will appear.

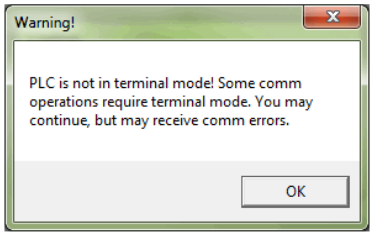

You are allowed to continue if you wish or place the mode selector switch on the CPU module in the Term position to avoid any unintended communication errors.

If you were connecting to the CPU module with a project created offline, you may encounter the message window shown here.

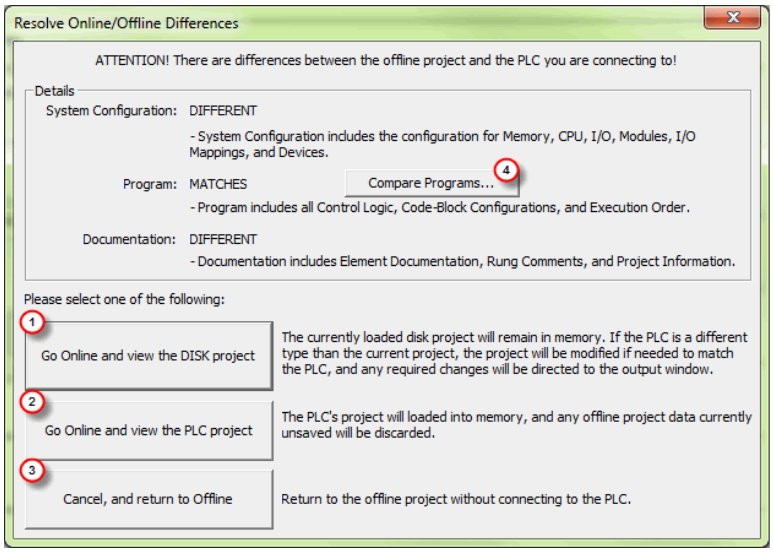

Only with the New Online option does the Do-more PLC assume that you are creating a new project from scratch. With any other method, such as PLC > Connect, the software will compare the project in the controller with the offline version you have open. If there are any differences, this warning window will appear detailing the options available for continuing:

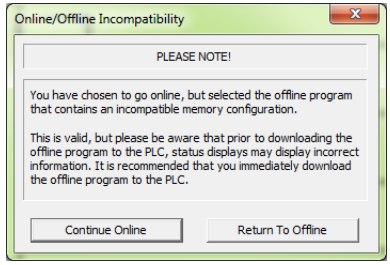

1. Go Online and view the DISK project - This option will go online with the PLC but display the project from disk. Status displays may show incorrect information. If the memory configuration in the disk-based project contains elements that are incompatible with the memory configuration currently in the Do-more PLC the message box seen here will be displayed.
2. Go Online and view the PLC project – The project from the PLC will be opened by Do-more! Designer.
3. Cancel, and return to Offline – This option will cancel the connection attempt and return to the offline project.
4. Compare Programs... – If you are unsure as to why the two projects are different, then this option will do a comparison of the projects and detail the differences found. An example comparison is seen below.

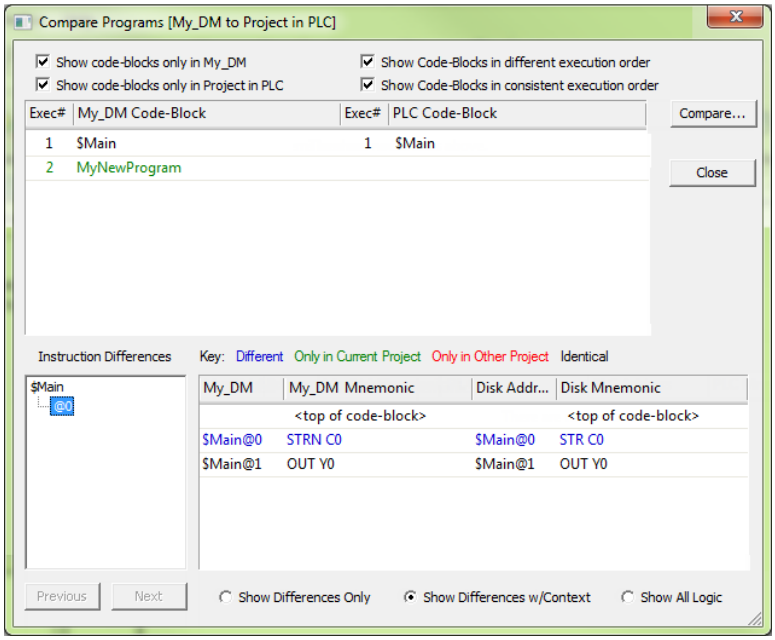

In this example, the PLC project titled My_DM was compared with a project stored on the PC. The report window shown above illustrates the differences found between the two.

According to the report, the PLC project was different in two areas. First, a new code-block was found only in the PLC project. This new code-block is titled MyNewProgram and is highlighted in green. The green color represents items that exist only in the Current Project (project in PLC) and not in the Other (project in PC). Also, the comparison noted that a normally open contact (STR) was changed to a normally closed contact (STRN) at $Main@0. This item is highlighted in blue which represents items that are different between the PLC Project and the project in the PC.

Other colors used in the comparison are red, which notes items that exist only in the project on the PC and not in the PLC and black which highlights items that are identical in both projects. There are also numerous checkbox and radio button options available to help you analyze the differences between projects.

Once you have connected to the CPU either by using the New Online option or using PLC > Connect for offline projects, you may encounter the initialization windows shown below.

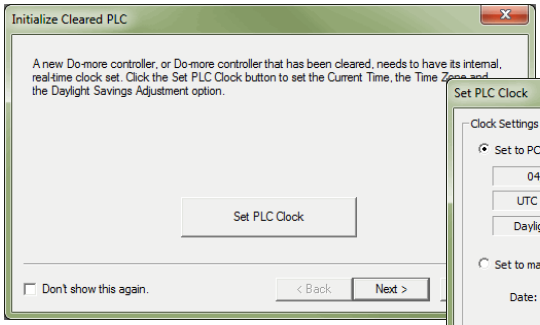

The Set PLC Clock option allows you to set the internal, real-time clock of the PLC.

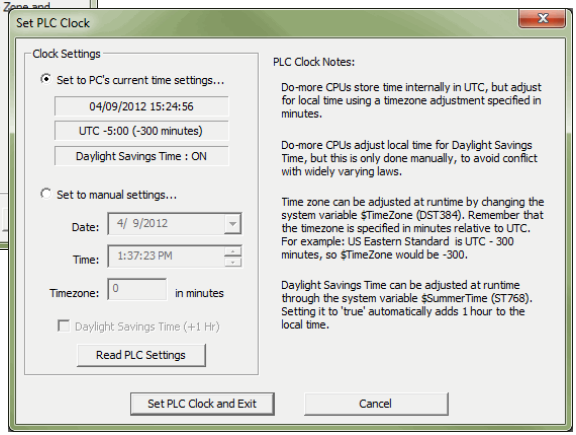

The Set PLC Clock window has options for Timezones and Daylight Savings Adjustments.

The Setup System Configuration option below allows you to configure the parameters of the Do-more PLC. I/O module configuration, CPU ports, and I/O mapping profiles are a few of the parameters available in the System Configuration window. Refer to the following section for Hardware Configuration options.

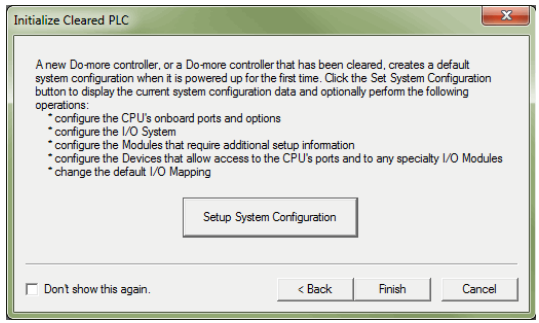

Once all parameters have been configured, the following programming window will open with the online toolbar active.

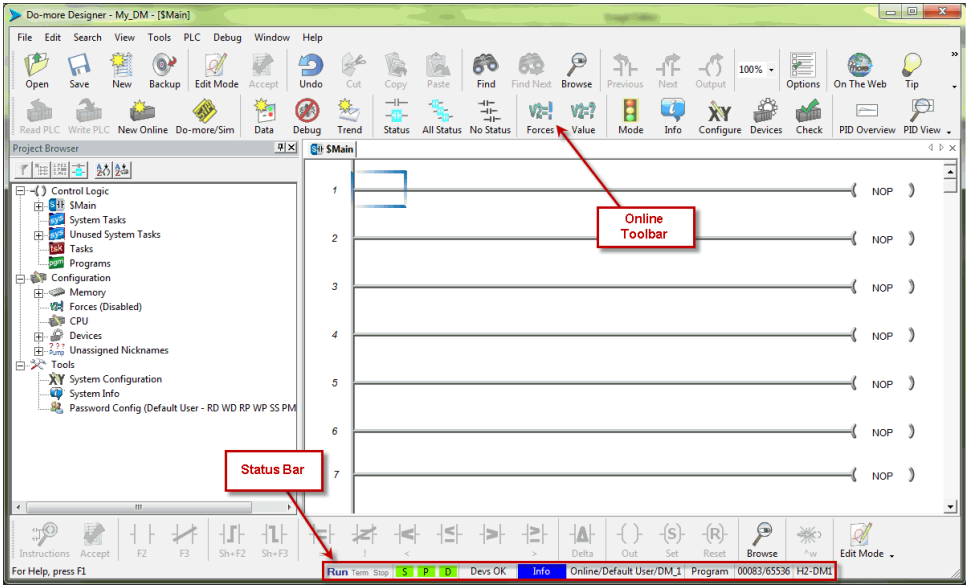

Notice the status bar indications which show PLC type, memory usage, communication status, PLC errors, PLC mode, etc. Hovering your mouse over the status bar will highlight the items that are selectable. If you select one of these items, a new window will open with real-time data and options that are available for that selection.

As an example, the System Information window seen here appears after selecting the Memory Usage indication from the status bar.

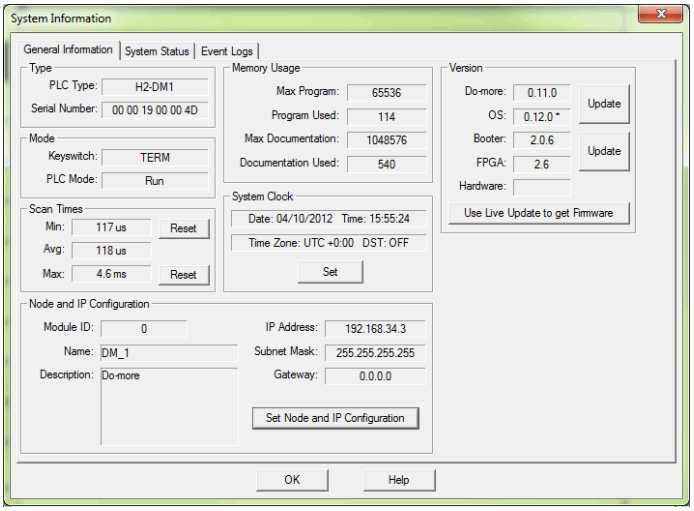

Step 6: Verify Hardware Configuration

Next, you will need to verify the hardware configuration for accuracy. The Do-more PLC has an auto discover feature that will automatically detect the I/O modules installed in the base. You can see the results of this search by selecting PLC > System Configuration, double clicking the CPU link under the Configuration tab in the Project Browser, or by clicking the XY Configure icon in the Project Toolbar.

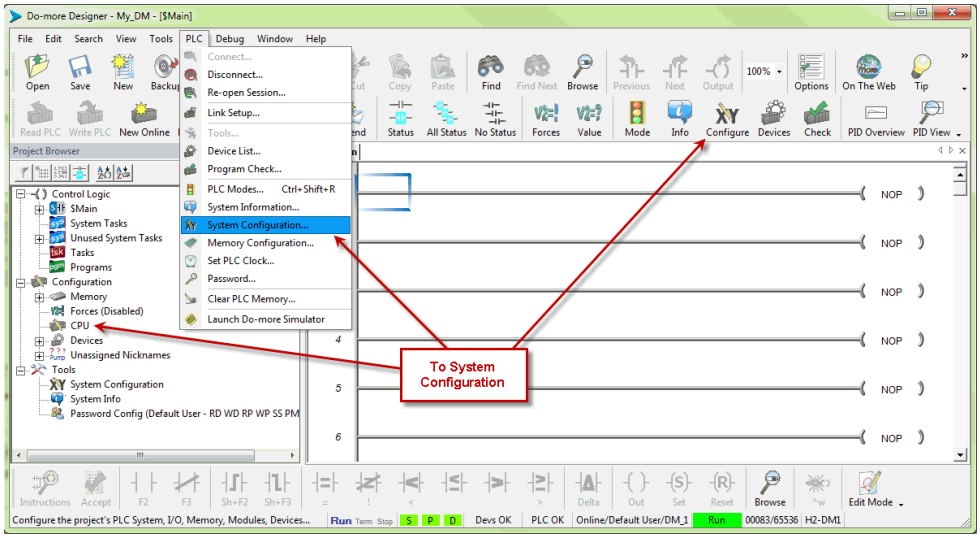

On the left side of the System Configuration window is an index of topics titled Configuration Entries. Click the I/O Configuration tab and you should see an overview of the modules that the software located, similar to the following.

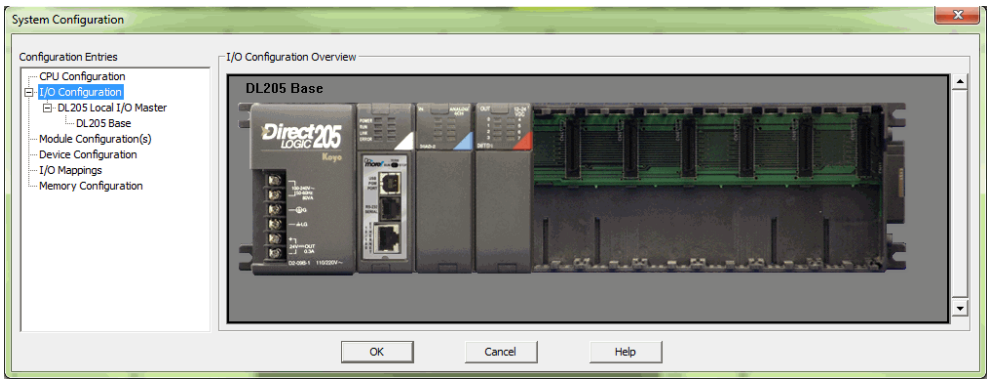

From here you can verify that the software has detected all of the I/O modules that are installed. At this point, you should also verify the base size. The Do-more PLC cannot automatically detect the base size and if it needs to be corrected, select the DL205 Base tab in the index and choose the appropriate size from the drop down list on that page.

The Do-more PLC allows the I/O to be manually configured as well. In order to do so, you must first set the I/O Configuration Mode to manual. Select the DL205 Local I/O Master tab found under the I/O Configuration tab in the Configuration Entries index.

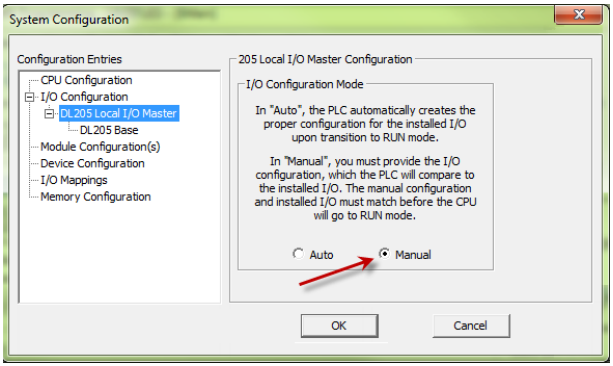

The 205 Local I/O Master Configuration window shown here will appear. From here select Manual to configure the I/O modules that are installed in the system yourself. It is important to remember that the PLC will compare what you configure with what is installed and they must match for the PLC to work properly.

NOTE: *If the manually configured I/O modules do not match the installed I/O modules, the PLC will not go into Run Mode.*

After you have set the configuration mode to Manual, select the DL205 Base tab in the Configuration Entries index. This will take you to the following set up window.

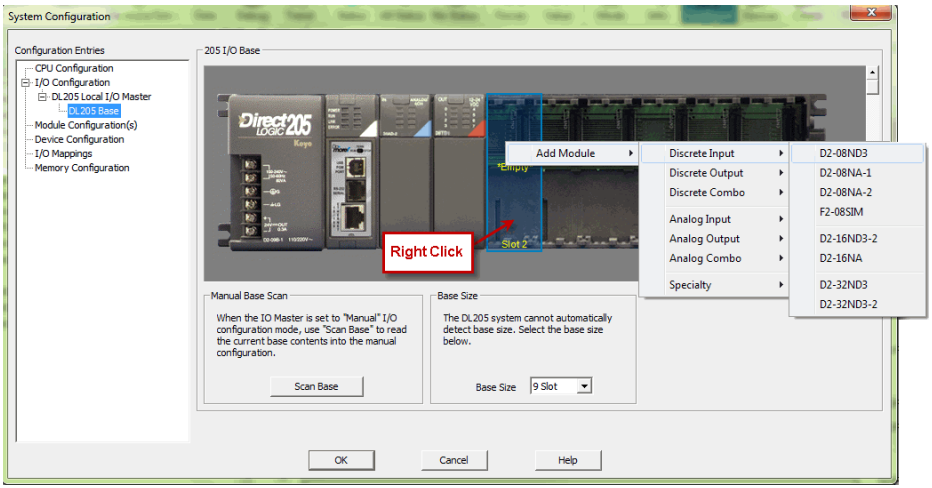

Notice that from this window, you can perform a Manual Base Scan. When initiated, this scan will poll the available modules in the base connected to the PC and display the I/O found. The results can then be altered as you choose. This window also contains the Base Size selection which is used to select the base size that the system is using.

To manually enter your I/O modules into the configuration, right click on the slot the module will reside in, select Add Module and then choose the module from the drop down list.

Once you have selected the module, it will appear in the slot that was chosen.

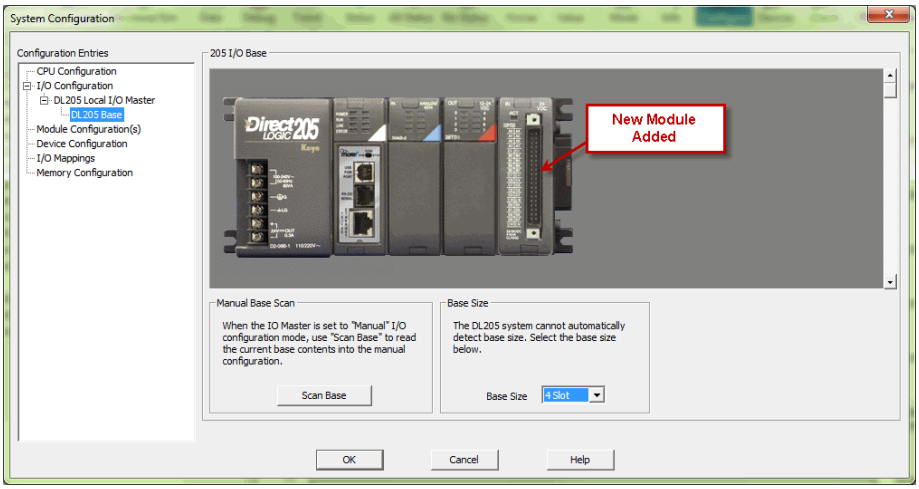

If an I/O module is manually configured but is not available for install or if at any time it has been removed for maintenance, the I/O configuration will allow you to place that module in an Optional state. This will allow the PLC to function properly without any hardware mismatch errors. As previously mentioned, the Do-more PLC will not enter Run mode if the configuration does not match the actual modules installed. With the Optional state, these errors can be avoided.

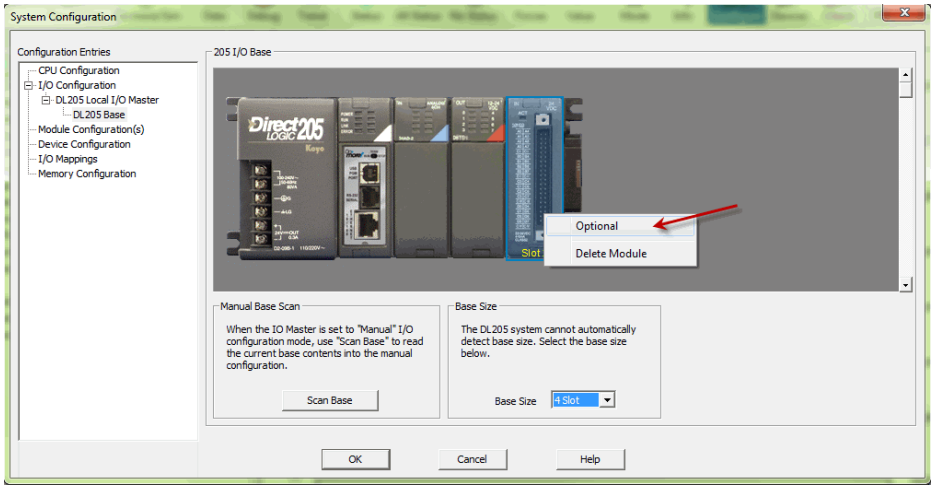

To make a module Optional, right click on the module and select Optional from the drop down list. The module will be labeled with the word "Optional" and the PLC will ignore it when performing the configuration comparison.

After the hardware configuration has been verified select the I/O Mappings tab in the Configuration Entries index. This option will display the assigned addresses for the configured modules as seen below.

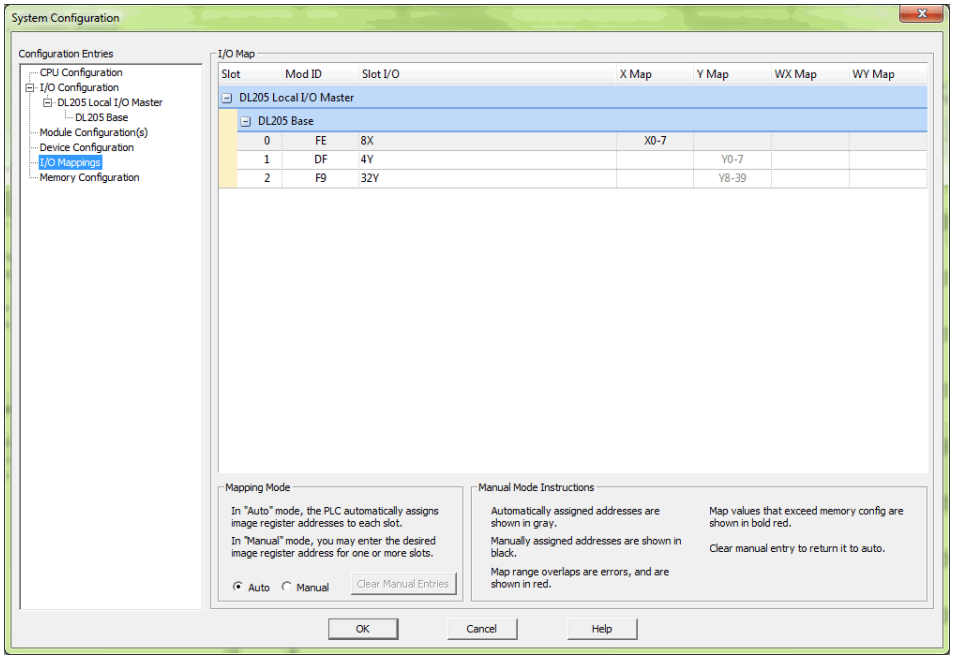

These X, Y, WX and WY addresses are automatically assigned by Do-more Designer. You have the option to manually configure these addresses by selecting Manual in the Mapping Mode section at the bottom of the window.

The Manual Mode Instructions section, also found at the bottom of the window, details the various color indications associated with this mode.

Step 7: Create a Ladder Logic Program

To create a ladder logic program, you must first place the software in the Edit Mode. Click the Edit Mode button found in the Project Toolbar or Ladder Palette Bar or use the shortcut Ctrl+E.

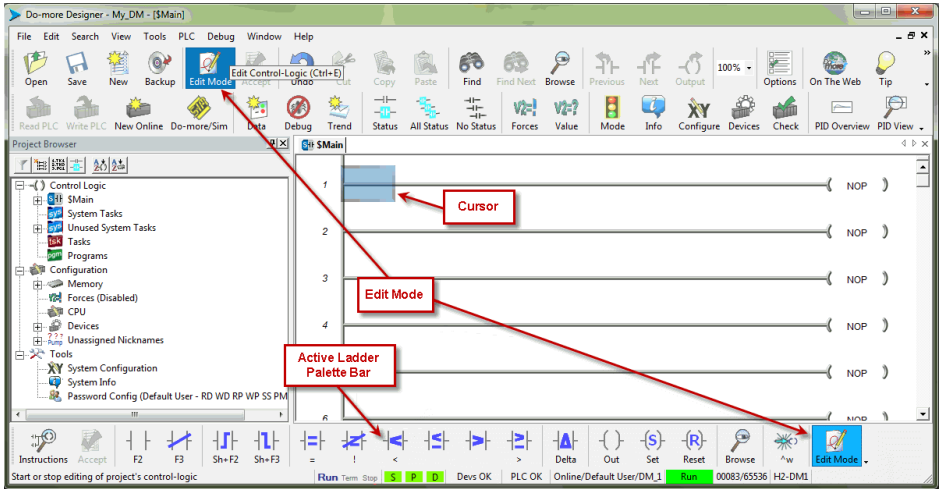

When in Edit Mode, all of the Ladder Palette Bar's options will become active and the cursor in Ladder View will fill in blue. Now, you are ready to begin entering the example ladder logic below.

Rung #1

Place the box cursor in the NOP position on Rung #1. If the Instruction Palette is not open, then click Instructions from the Ladder Palette Bar and select the TMR (Timer) or type a "T" and select TMR from the drop down menu, then press Enter. Once TMR is selected, a Timer dialog box appears.

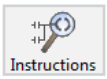

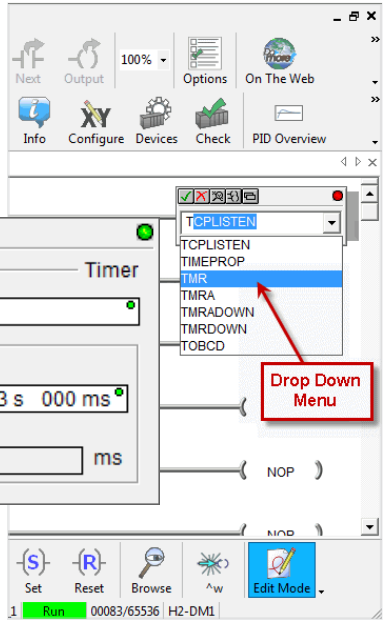

1. Set the Timer Struct to T1.
2. Enter 03 into the Preset Constant Value for the seconds (s) preset.
3. Click the checkmark in the upper left corner to accept.

After clicking the checkmark, Rung #1 should show the T1 timer (TMR) instruction with a preset of 3.000 seconds. A user variable can be assigned to the preset value if needed.

Since a Timer is a structure it has predefined elements associated with it. Elements such as .Acc (accumulated time), .Done (the completion bit) and .Timing (the timer is enabled and timing). Therefore, if "T1." is entered into any contact name the Auto-Complete feature of Do-more Designer will display all applicable bit (boolean) selections available for that structure. Selecting the T1.Done option as seen below, will assign this element to the contact and the contact name will be T1.Done.

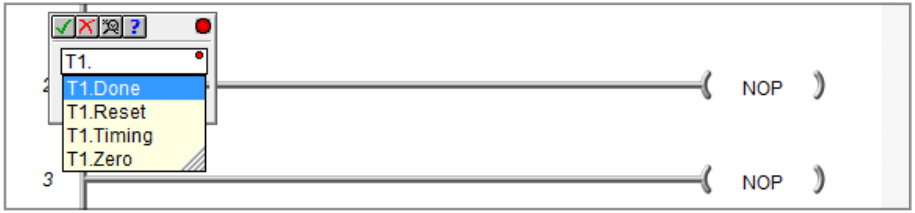

This feature works for all structures including: timers, counters, PID loops and strings. Many system data types such as, $Main and $FirstScan, as well as user-created devices like ECOM, CTRIO, or SERIO modules can also use this feature. See the Do-more Designer Help file for more information on structures.

Now place the box cursor in the leftmost column of Rung #1. Type in a meaningful nickname, such as "T1_Start", and press Enter or select the Normally Open Contact (F2) from the Ladder Palette Bar, enter "T1_Start" for the name and click the checkmark in the upper left corner. Either method will open the Create Nickname dialog seen here. Select the third option to assign the nickname to a specified element, type the desired memory bit for this contact (C1) and select OK.

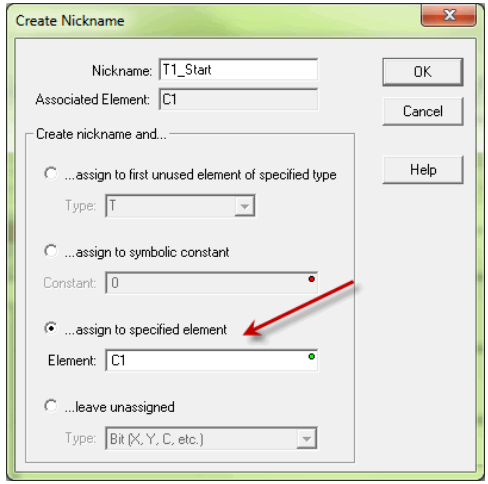

Rung #1 should now appear as follows:

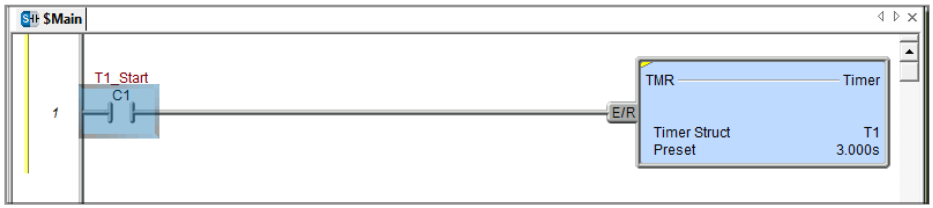

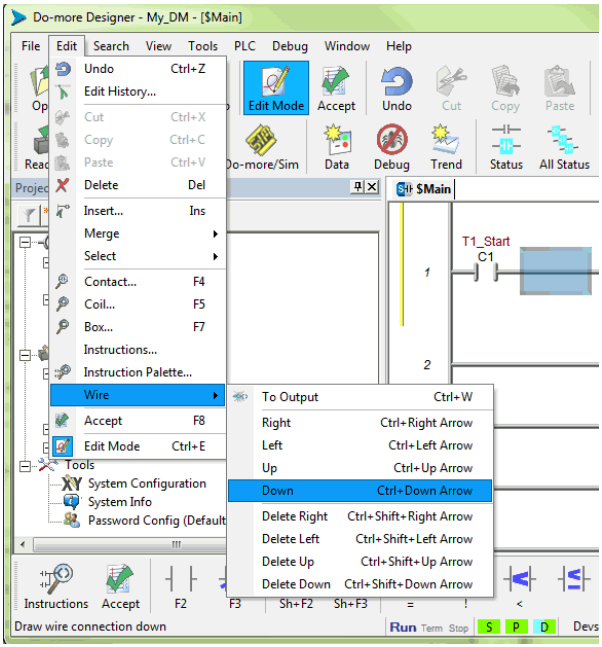

With the cursor in the position to the right of contact T1_Start, you are going to begin drawing a branch circuit. Under the Edit drop down menu, select Wire, then select Down. Notice the shortcuts that are available for wire drawing. The wire that should now appear in your ladder could have also been drawn using the shortcut Ctrl+Down Arrow.

NOTE: *There are also Delete Wire options in the Edit drop down menu that are used to erase any wires not needed.*

Now place the cursor in the space to the left of the new line and select another normally open contact.

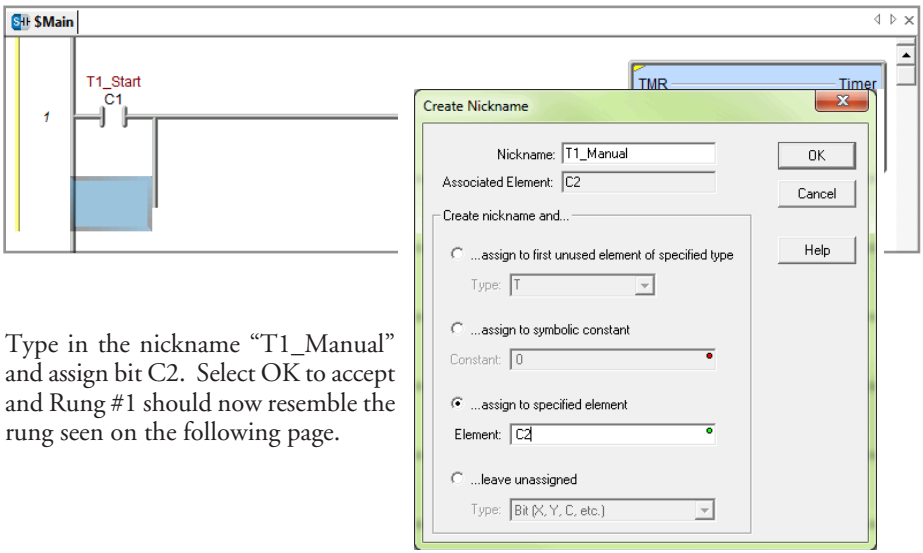

Type in the nickname "T1_Manual" and assign bit C2. Select OK to accept and Rung #1 should now resemble the rung seen on the following page.

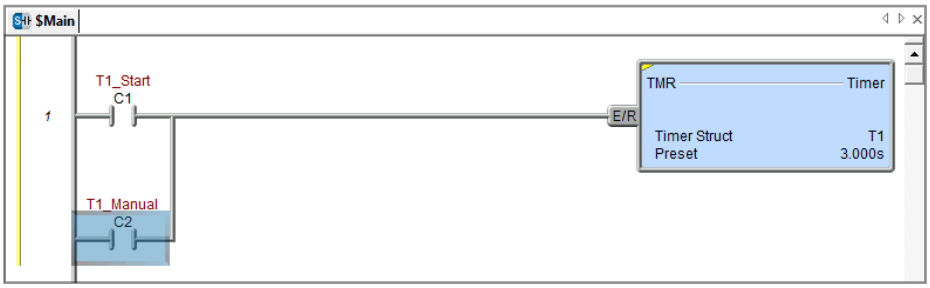

Rung #2

Place a normally open contact in the first position of Rung #2. This contact will be tied to the Done bit of timer T1. Therefore, the name for this contact should be entered as "T1.Done". There should be no Create Nickname dialog as seen with the earlier normally open contacts.

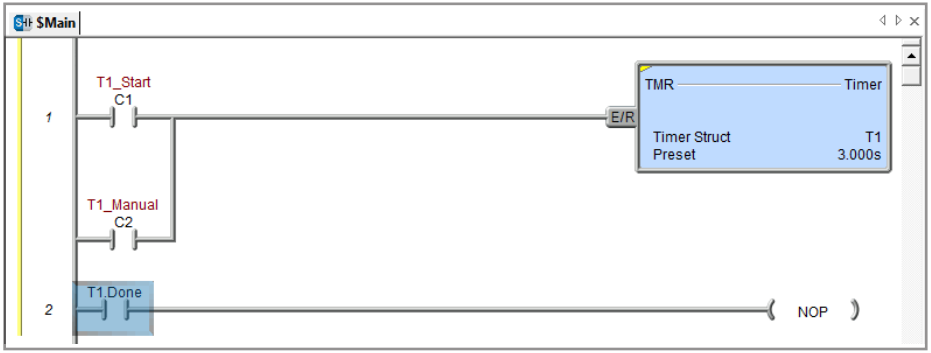

Lastly, you will need to add an Out coil to the end of Rung #2. Place the cursor at the end of the rung and either select Out from the Ladder Palette Bar or just type "OUT" and select the Out instruction from the drop down menu. Next, choose which bit will be tied to this coil. Tie this coil to the physical output Y1 by typing "Y1" and click the checkmark.

The ladder program should now look like the following. When either the T1_Start or T1_Manual contact is energized, the timer will begin timing. When it times out, contact T1_Done will energize and the output coil Y1 will turn on. Note that an END instruction is not required.

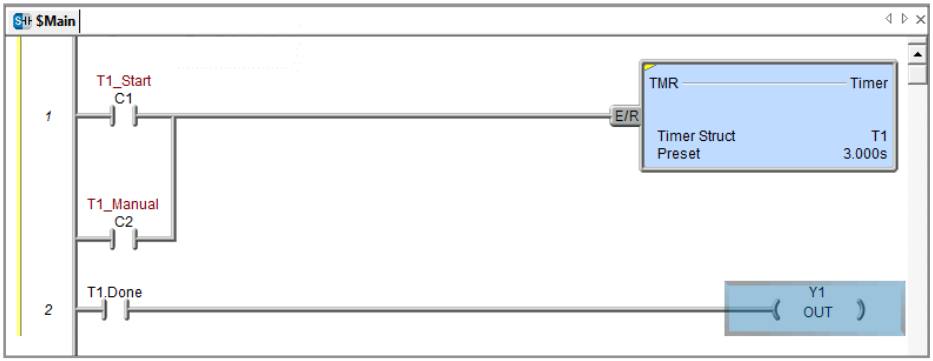

The yellow bar in the margin signifies logic that has not been accepted. So once you have verified your logic, click the Accept button in the Project Toolbar or the Ladder Palette Bar to accept the changes.

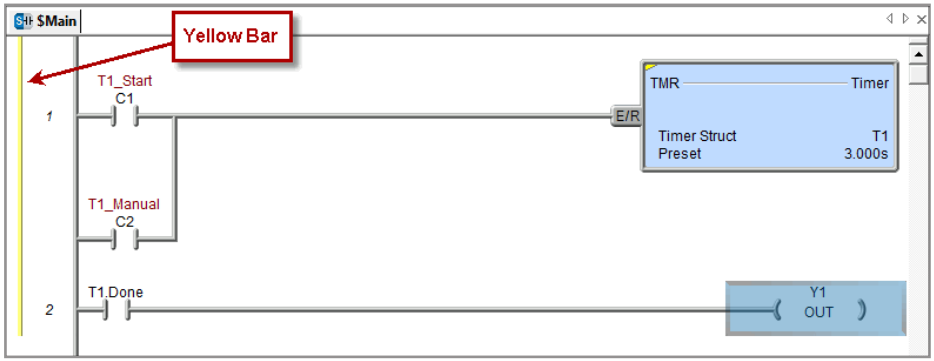

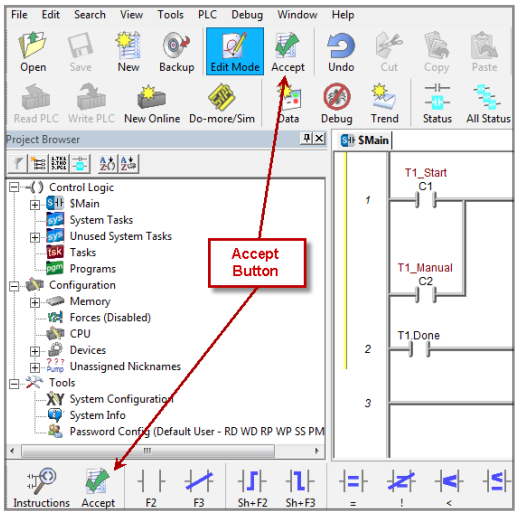

You should now see blue and green bars, shown below, signifying that the logic has not been downloaded to the CPU or saved.

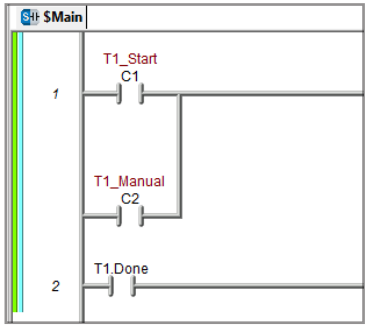

Now exit the Edit mode by once again clicking the Edit Mode button.

1

Step 8: Save a Project

Save the project by selecting Save Project (Ctrl+S) from the File drop down menu. Or save the file under a different name or in a different location by selecting the Save Project As... option.

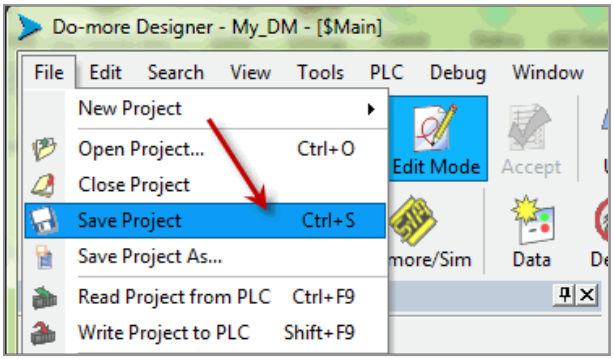

Step 9: Write Project to the Do-more PLC

Now that you have created the example ladder logic program, you can write the program to the PLC. To do so, click the Write PLC button in the Project Toolbar.

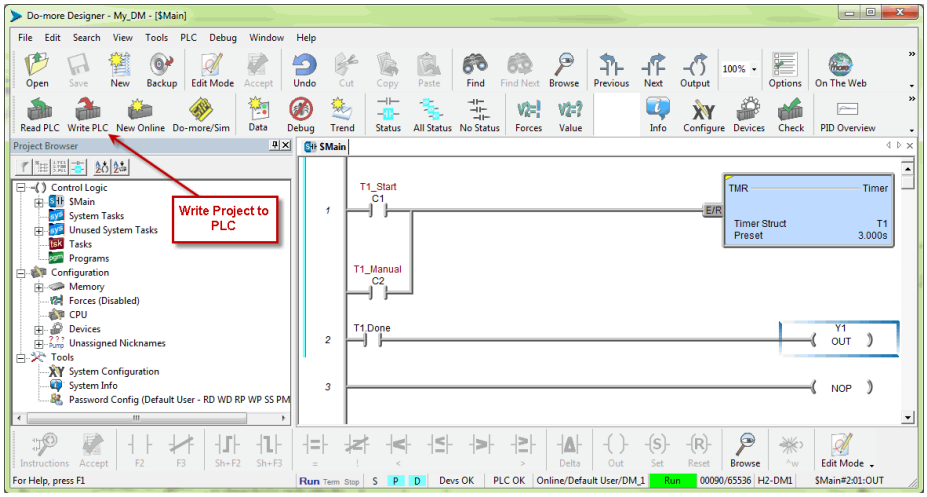

If the Write PLC button is not active, then you must first connect to the PLC to activate the online portion of the Project Toolbar (see the "Establish Communication" section of this chapter). If you have altered the System Configuration, which includes the hardware configuration, in any way, then the PLC must be taken out of the Run mode in order to process the download.

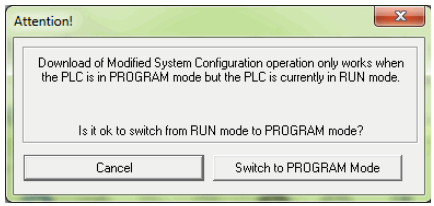

The message seen here will appear asking you to verify if this is a good time to do so. Since this is the setup phase of this system, select Switch to Program Mode and continue with the download.

If this system was previously commissioned and in use, then you would need to verify that the process it is controlling can be interrupted at this time before continuing.

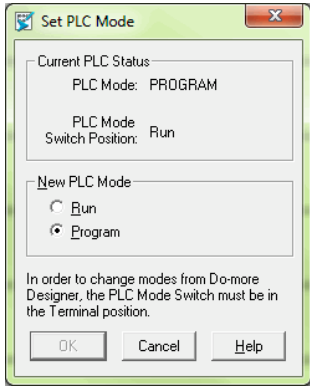

Download the project and once the download is finished, assuming there are no errors, the Do-more PLC should return to the Run mode. If at any time you need to change the PLC mode, select the Mode icon in the Project Toolbar, click the Mode Status indication in the Status Bar or select PLC > PLC Modes....

The PLC Modes window shown here will open displaying the current mode the PLC is in with options to change it to either Run or Program mode. Click OK to accept the change or Cancel to exit.

Step 10: Testing Project Using Data View

With the project successfully downloaded into the Do-more PLC, you can now test the function of the ladder program using the Data View tool. To start, you need to open a new Data window in the software. To do so, click the Data icon in the Project Toolbar, select Debug > Data View > New or press Ctrl+Shift+F3.

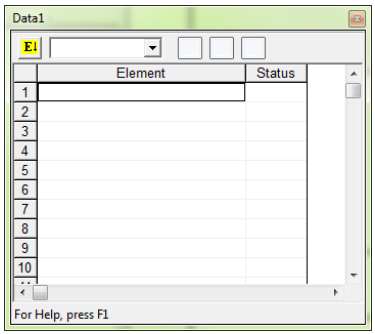

The Data View window seen here will now open. This window will open in the project browser section of the programming window but it can be relocated anywhere on the screen by clicking the title bar and dragging it to a new location.

Now enter the elements that you wish to monitor. On line one type “C1” under the Element column and press Enter. You will see the C1 change to the variable name associated with it or T1_Start. On line two type the element “C2” and on line three type “Y1”.

With the ladder elements entered into the Data View window, you now need to activate their status. To do so, click the All Status icon on the Project Toolbar or select Debug > All Status On. The All Status On option will not only activate the status of the Data View window but also the status of the ladder program as seen on the following page.

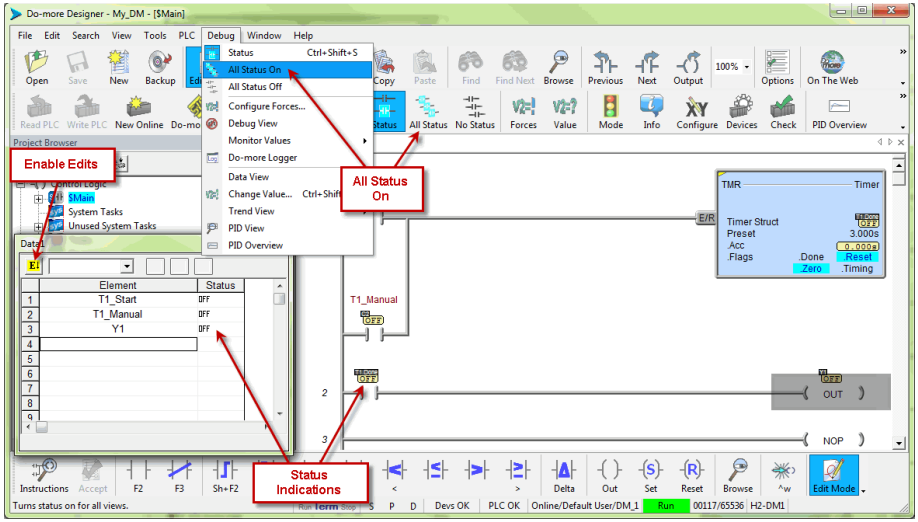

The next step is to enable edits within the Data View window. To do so, click the yellow box with the "E" found in the top left corner of the Data View window, as seen above. The Edits column is now added to the Data View window.

The Edits column allows you to make changes to the current values of the elements listed. T1_Start's current value is OFF. Click the ON button under the Edits column and the Write Current Edit and the Writes All Edits buttons will appear at the top of the window. These buttons will write individual or all edits made in the Data View window to the PLC.

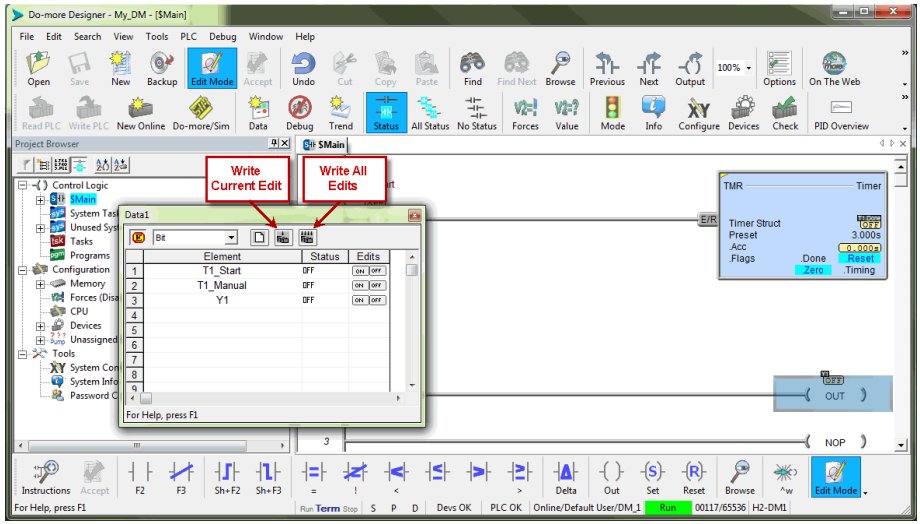

Click the Write Current Edit to PLC button and confirm it. This will write the new value to T1_Start. Once T1_Start changes to an ON state, the timer (T1) will begin to time and quickly reach the preset. As soon as the preset is reached, the done bit T1.Done, will turn ON causing output Y1 to also turn ON as seen on the following page. Now write an OFF to T1_Start and watch as the timer and Y1 reset.

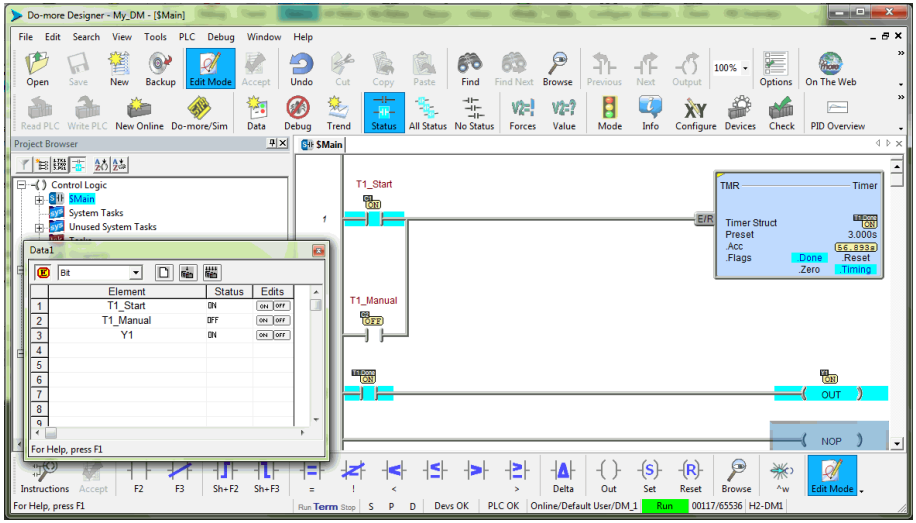

Congratulations, you have now programmed, downloaded and tested a ladder logic program for the Do-more PLC. Feel free to experiment with a program of your own and don't forget that the software Help file is an essential tool to use when programming your controller.

Accessing the Help File

The Do-more! Designer software Help file, seen below, is available as a quick reference or detailed guide to the many features and capabilities of the Do-more PLC. To access the Help File select the Help File icon from the Project Toolbar, choose Help from the Help menu drop down or use the shortcut F1.

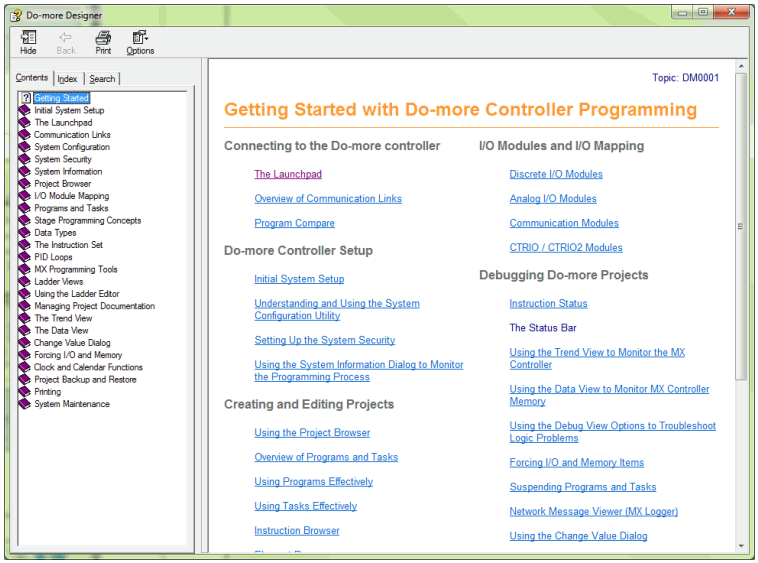

Notes:

Do-more! H2 Series PLC Overview

In This Chapter...

Do-more H2 Series PLC Overview 2–2
Do-more/DL205 System Compatibility 2–3
Communications 2–4

Do-more H2 Series PLC Overview

The Do-more H2 Series PLC is the first PLC series that we introduce to you as a part of the Do-more PLC family. The Do-more H2 Series PLC utilizes most of the modules that we have been selling as the DL205 PLC. You just need to install a Do-more H2 Series CPU module into the DL205 base unit. However, the specifications of the Do-more H2 Series PLC are very different from the DL205 PLC. This overview covers the key features of the Do-more H2 Series PLC.

Do-more H2 CPU Module

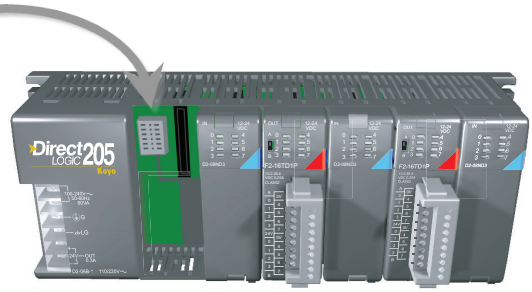

DL205 PLC base unit and I/O modules

The Do-more H2 Series PLC is designed around a new control engine with a new, advanced Do-more Instruction Set for ladder programs. The new Do-more Designer software, with advanced programming and monitoring features, will be used to create your new programs.

NOTE: *Because the Do-more PLC supports a new instruction set and new memory addressing for ladder programming, the user project made for the DL205 PLC CANNOT be used in the Do-more PLC. The DL205 user project needs to be recreated from scratch for the Do-more PLC.*

Do-more/DL205 System Compatibility

The following table lists DL205 components that are supported by the H2-DM1 and H2-DM1E Do-more CPUs.

✓:Supported No: Not Supported

System Compatibility Table					
Module	**Part Number**	**Status**	**Module**	**Part Number**	**Status**
Base Units	D2-03B-1	✓	*Analog I/O Modules*	F2-04AD-1	✓
	D2-04B-1	✓		F2-04AD-2	✓
	D2-06B-1	✓		F2-08AD-1	✓
	D2-09B-1	✓		F2-08AD-2	✓
	D2-03BDC1-1	✓		F2-04RTD	✓
	D2-04BDC1-1	✓		F2-04THM	✓
	D2-06BDC1-1	✓		F2-02DA-1(L)	✓
	D2-09BDC1-1	✓		F2-02DA-2(L)	✓
	D2-06BDC2-1	✓		F2-02DAS-1	✓
	D2-09BDC2-1	✓		F2-02DAS-2	✓
Discrete I/O Modules	D2-08ND3	✓		F2-08DA-1	✓
	D2-16ND3-2	✓		F2-08DA-2	✓
	D2-32ND3	✓		F2-4AD2DA	✓
	D2-32ND3-2	✓		F2-8AD4DA-1	✓
	D2-08NA-1	✓		F2-8AD4DA-2	✓
	D2-08NA-2	✓	*Local Expansion Modules*	D2-CM	No
	D2-16NA	✓		D2-EM	No
	D2-04TD1	✓	*Specialty Modules*	H2-ERM(100)	✓
	D2-08TD1	✓		H2-ERM-F	✓
	D2-08TD2	✓		D2-RMSM	No
	D2-16TD1-2	✓		D2-RSSS	No
	D2-16TD2-2	✓		H2-ECOM100	✓
	F2-16TD1P	✓		H2-ECOM-F	✓
	F2-16TD2P	✓		D2-DCM	No
	D2-32TD1	✓		H2-EBC100	✓
	D2-32TD2	✓		H2-EBC-F	✓
	D2-08TA	✓		H2-SERIO	✓
	F2-08TA	✓		H2-SERIO-4	✓
	D2-12TA	✓		F2-CP128	No
	D2-04TRS	✓		H2-CTRIO	✓
	D2-08TR	✓		H2-CTRIO2	✓
	F2-08TR	✓		D2-CTRINT	No
	F2-08TRS	✓		F2-08SIM	✓
	D2-12TR	✓	*Programmer*	D2-HPP	No
	D2-08CDR	✓	*Operator Interface*	DV-1000	No

Communications

The Do-more H2 Series PLC supports many communication protocols. The following table shows which CPU module communications port or specialty module supports each protocol.

Protocols	CPU Modules			Specialty Modules			
	H2-DM1 / H2-DM1E		H2-DM1E	H2-ECOM100	H2-ECOM-F	H2-SERIO H2-SERIO-4	H2-ERM(100) H2-ERM-F
	USB Port	RS-232 Serial Port	Ethernet Port				
Do-more Designer Programming	Yes	Yes	Yes	Yes		Yes	
Ethernet/IP			Yes				
Modbus/RTU Client (Master)		Yes				Yes	
Modbus/RTU Server (Slave)		Yes				Yes	
Modbus/TCP Client (Master)			Yes	Yes			
Modbus/TCP Server (Slave)			Yes	Yes			
DirectLOGIC RX/WX Client (Master)			Yes	Yes	Yes		
DirectLOGIC RX/WX Server (Slave)			Yes	Yes	Yes		
K-Sequence Server (Slave)		Yes		Yes	Yes	Yes	
DirectNET Server (Slave)				Yes	Yes		
HEI Ethernet Remote I/O Master			Yes				Yes
SMTP (EMail) Client w/ Authentication			Yes				
Simple Network Time Protocol (SNTP) Client			Yes				
Do-more/PEERLINK			Yes				
Do-more Time Synchronization Protocol (Client, Server, Alternate Client)			Yes				
Do-more Logger/UDP			Yes				
Serial ad-hoc ASCII/ Binary Programatic Control		Yes				Yes	
UDP ad-hoc Programmatic Control			Yes				
TCP Client Programmatic Control			Yes				
TCP Server Programmatic Control			Yes				

Blank: Not Supported

SPECIFICATIONS: CPU MODULES

In This Chapter...

CPU Specifications 3–2
CPU General Specifications 3–2
Communications Ports Specifications 3–4
Port 1 Specifications (USB) 3–4
Port 2 Specifications (Serial) 3–4
USB Type B Slave Input Specifications 3–4
Port 3 Specifications (Ethernet) 3–5
Ethernet Specifications 3–5
Ethernet Expansion I/O 3–6
Status Indicators 3–8
Mode Switch Functions 3–8
DIP Switch Specifications 3–9
Battery Replacement 3–12

CPU Specifications

CPU General Specifications

CPU General Specifications		
Feature	**H2-DM1**	**H2-DM1E**
Total Memory (bytes)	262,144 bytes	
Ladder Memory (instruction words)	65,536 instruction words	
V-Memory (words)	Configurable up to 65536 (4096 default)	
Non-volatile V Memory (words)	Configurable up to 65536 (4096 default)	
D-memory (DWORDs)	Configurable up to 65536 (4096 default)	
Non-volatile D Memory (DWORDs)	Configurable up to 65536 (4096 default)	
R-memory (REAL DWORDs)	Configurable up to 65536 (4096 default)	
Non-volatile R Memory (REAL DWORDs)	Configurable up to 65536 (4096 default)	
Boolean execution/K	50µs	
Stage Programming	Yes	
Number of Stages	128 per Program code-block; number of code-blocks configurable to memory limit	
Handheld Programmer	No	
Programming Software for Windows	FREE Do-more Designer	
Built-In communications ports	USB, RS-232	USB, RS-232, Ethernet (10/100 Base-T)
Program Memory	Flash ROM	
Total I/O points available	X, Y, each configurable up to 65536 (2048 default); WX, WY (analog in/out) each configurable up to 65536 (256 default)	
Local I/O points available	256	
Ethernet Remote I/O Discrete points	131,072	
Ethernet Remote I/O Analog I/O Channels	32,768	
Max Number of Ethernet slaves per Channel	16	
I/O points per Remote Channel	32,768	
Discrete I/O Module Point Density	4/8/12/16/32	
Slots per Base	3/4/6/9	
Number of instructions available	>160	>170
Control relays	Configurable up to 65536 (2048 default)	
Special relays (system defined)	1024	
Special registers (system defined)	512	
Timers	Configurable up to 65536 (256 default)	
Counters	Configurable up to 65536 (256 default)	
System Date/Time structures	8	

CPU General Specifications (continued)		
Feature	**H2-DM1**	**H2-DM1E**
User Date/Time structures	Configurable up to 65536 (32 default)	
ASCII String/Byte buffer structures	Configurable up to memory limit (192 default)	
Modbus Client memory	Yes, configurable up to memory limit, default 1024 input bits, 1024 coil bits, 2048 input registers, 2048 holding registers	
DL Classic Client memory	Up to memory limit, default 512 X, 512 Y, 512 C, 2048 V	
Immediate I/O	No	
Interrupt input (hardware / timed)	No	
Subroutines	Program and Task code-blocks, up to memory limit	
Drum Timers	Yes, up to memory limit	
Table Instructions	Yes	
Loops	FOR/NEXT, WHILE/WEND, REPEAT/UNTIL loops	
Math	>60 operators and functions: Integer, Floating Point, Trigonometric, Statistical, Logical, Bitwise, Timing	
ASCII	Yes, IN/OUT, Serial, Ethernet TCP and UDP; 11 output script commands	
PID Loop Control, Built In	Yes, configurable to memory limit (over 2,000)	
Time of Day Clock/Calendar	Yes	
Run Time Edits	Yes	
Supports True Force	Yes	
Internal Diagnostics	Yes	
Password security	Multi-user, credentialed, session-based security	
System error log	Yes	
User error log	Yes	
Battery backup	Yes (Battery included)	

Communications Ports Specifications

Port 1 Specifications (USB)

USB Port: This port has a USB Type B female connector and requires a USB Type A-B cable.

- Do-more programming protocol only

USB Type B Slave Input Specifications	
Description	Standard USB 2.0 Slave input for programming and online monitoring only, with built-in surge protection. Not compatible with older full speed USB devices.
Cables (ADC part #)	USB Type A to USB Type B: USB-CBL-AB3 (3ft) USB-CBL-AB6 (6ft) USB-CBL-AB10 (10ft) USB-CBL-AB15 (15ft)

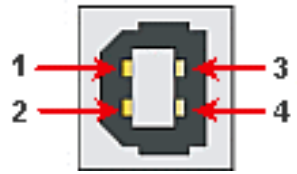

USB Port 1		
1	5V	Bus Voltage Sense
2	D-	Data -
3	D+	Data +
4	0V	Ground

Port 2 Specifications (Serial)

RS-232 Port: Serial RS-232 multipurpose communications port with RJ12 connector.

RJ-12 style connector used for:

- Do-more programming protocol
- Modbus RTU Master connections
- Modbus RTU Slave connections
- ASCII Incoming and Outgoing communications
- Custom Protocol Incoming and Outgoing communications

RS-232 Specifications	
Description	Non-isolated, full duplex RS-232 DTE port used for programming, online monitoring or can connect the CPU as an ASCII or Modbus RTU master or slave to a peripheral device. Includes ESD and built-in surge protection.
Baud Rates	1200, 2400, 4800, 9600, 19200, 38400, 57600, and 115200.
+5V Cable Power Source	220mA maximum at 5V, ±5%. Reverse polarity and overload protected.
Maximum Output Load (TXD/RTS)	3kΩ, 1,000pf
Minimum Output Voltage Swing	±5V
Output Short Circuit Protection	±15mA
Cable Options	D2-DSCBL USB-RS232 with D2-DSCBL FA-CABKIT FA-ISOCON for converting RS-232 to isolated RS-422/485 EA-MG-PGM

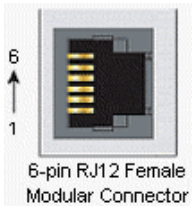

RS-232 Port 2		
1	0V	Power (-) connection (GND)
2	5V	Power (+) connection (220mA max)
3	RXD	Receive Data (RS-232)
4	TXD	Transmit Data (RS-232)
5	RTS	Request to Send (RS-232)
6	CTS	Clear to Send (RS-232)

Port 3 Specifications (Ethernet)

Ethernet Port: Programming and Modbus TCP Client/Server port with 10/100 Base-T Ethernet RJ45 connector.

RJ-45 style connector used for:

- Do-more programming protocol
- Modbus TCP Client connections (Modbus requests sent from the CPU)
- Modbus TCP Server connections (Modbus requests received by the CPU)
- Ethernet/IP
- Ethernet Expansion I/O Master

Ethernet Specifications	
Description	Standard transformer isolated Ethernet port with built-in surge protection for programming, online monitoring, Modbus/TCP client/server connections (fixed IP or DHCP), Ethernet/IP and Ethernet Expansion I/O capabilities.
Transfer Rate	10/100 Mbps, Auto-MDX (Crossover)

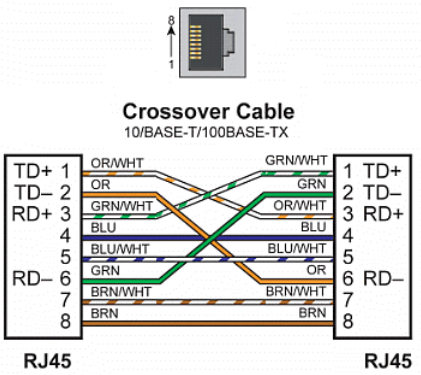

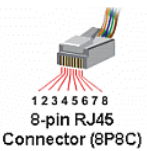

NOTE: *The above diagram illustrates the standard wire positions in the RJ45 connector. It is recommended that all 10/100 Base-T cables be Category 5, UTP cables.*

Ethernet Expansion I/O

With Do-more Designer Software version V1.1 and newer, the H2-DM1E CPU's built-in Ethernet port can be configured as an Ethernet Expansion I/O master. Much like the ERM module discussed in Chapter 7, the Ethernet Expansion I/O feature allows expansion beyond the local chassis to slave I/O using the onboard high-speed Ethernet link.

The onboard Ethernet port can support up to 16 slave devices. The slave I/O modules supported are:

- H2-EBC100
- T1H-EBC100 (Terminator I/O)
- GS-EDRV100 (GS Drives)

The Ethernet Expansion I/O network uses Category 5 UTP cables for cable runs up to 100 meters (328ft) with extended distances achieved through Ethernet switches.

Ethernet Expansion Example

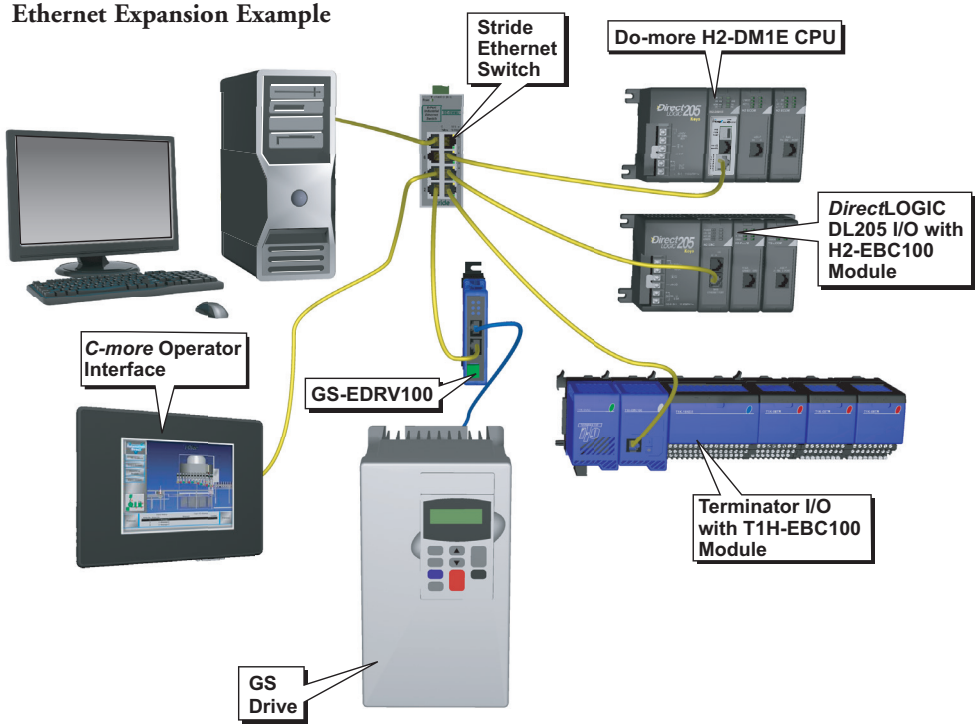

WARNING: It is highly recommended that a dedicated network be used with the Ethernet Expansion I/O feature. Ethernet Expansion I/O networks and ECOM/office networks should be isolated from one another to prevent network delays. While Ethernet networks can handle a large number of data transactions, and normally handle them very quickly, heavy Ethernet traffic can adversely affect the reliability of the slave I/O and the speed of the I/O network.

Ethernet Expansion I/O functionality is enabled through the System Configuration dialog of Do-more Designer.

Under the PLC drop down menu, select System Configuration. Then, from the System Configuration window select the CPU Configuration option under the Configuration Entries column. Finally, left-click the Enable Ethernet I/O Master checkbox in the Ethernet I/O Master section of the H2-DM1E CPU Configuration window as seen below.

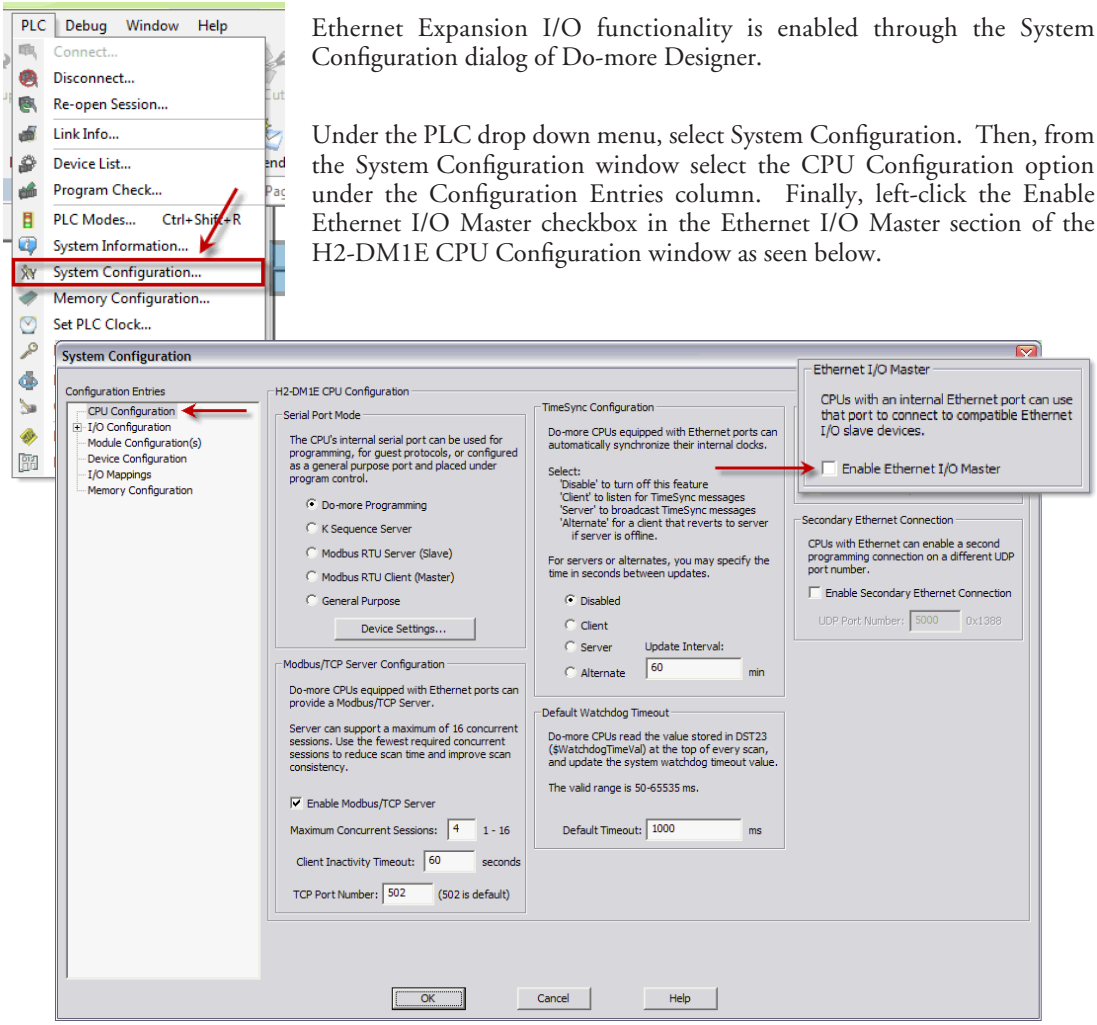

For more information on the setup, use and options available with Ethernet Expansion I/O, refer to the Ethernet I/O Master section of Do-more Designer Help File topic DMD0247.

Status Indicators

Do-more controllers in the DL205 series have two-color LEDs that are used to visually provide operational status to the user.

LED Indicators		
Indicator	**Status**	**Description**
PWR	OFF	Base Power OFF
	Green	Base Power ON
	Yellow	Low Battery
RUN	OFF	CPU is in STOP Mode
	Green	CPU is in RUN Mode
	Yellow	Forces are Active
ROM	OFF	Non-volatile Memory is up to date
	Yellow	CPU is updating Non-volatile Memory
ERR	OFF	CPU is functioning normally
	Red	CPU Fatal Hardware Error or Software Watchdog Error
ETH	Green	Ethernet Link Good
	Yellow	Ethernet Activity
USB	Green	USB Receive Activity
	Yellow	USB Transmit Activity
TX	Green	RS-232 Transmit Activity
RX	Green	RS-232 Receive Activity

In addition to the individual definition of each LED, there are times when the controllers will use combinations of the LED ON/OFF state and colors to convey status information. The following combinations use some or all of the LEDs:

- ERR LED is blinking RED for (15 seconds) - Do-more Designer can blink the ERR led for 15 seconds to verify that a communication link is targeting the correct controller.
- All eight (8) of the LEDs are ON and the color of each LED is GREEN - indicates the operating system has started running.
- All eight (8) of the LEDs are cycling through RED and GREEN, in a circular 'chase' pattern - indicates the operating system is initializing.
- The left-most four (4) LEDs are cycling through RED and GREEN, in a 'bouncing ball' pattern - indicates the controller is running only the boot loader and is NOT going to load and run the operating system. The most likely cause is having DIP switch #1 in the ON position.
- All eight (8) of the LEDs are ON and the color of each LED is RED - indicates the hardware watchdog timer has expired because the controller's operating system has stopped running.

Mode Switch Functions

The mode switch on the Do-more CPU allows the user to externally select the different modes of operation. There are three modes available: RUN, TERM and STOP.

Mode Switch Functions	
Mode Switch Position	**CPU Action**
RUN (Run Program)	CPU is forced into RUN Mode if no errors are encountered.
TERM (Terminal)	RUN, PROGRAM and the DEBUG modes are available. In this mode, the mode of operation can be changed through the Do-more Designer Software.
STOP (Stop Program)	CPU is forced into STOP Mode.

As mentioned in the previous table, the CPU mode can also be changed through the programming software if the mode switch is placed in the TERM position. In this position, the CPU can be changed remotely between the Run and Program modes. For more information on changing CPU modes through the software, see the "Step 9: Write Project to the Do-more PLC" section of Chapter1 "Getting Started".

When power is applied to the system, the controller will go through it's power-up sequence then either stay in Program mode if the mode switch is in the STOP position, or attempt to go to Run mode if the mode switch is in the RUN position.

If the mode switch is in the TERM position, the controller will return to the last operational mode before power was lost. For example, if the controller was in Run mode when power was lost, when power is restored and the mode switch is in the TERM position, the controller will attempt to return to Run mode.

DIP Switch Specifications

Do-more controller's circuit board has a block of DIP switches that are used to perform various debug and reset operations. The DIP switch settings are only read when the system is first powered up. Changing the settings of the DIP switches requires that the base containing the controller be powered down and the controller removed from the base. The DIP switches can then be changed as required. The controller can then be reinstalled in the base and the system powered back up. The DIP switch block is located on front of the controller's PWB, and is only accessible when the controller is NOT installed in the base.

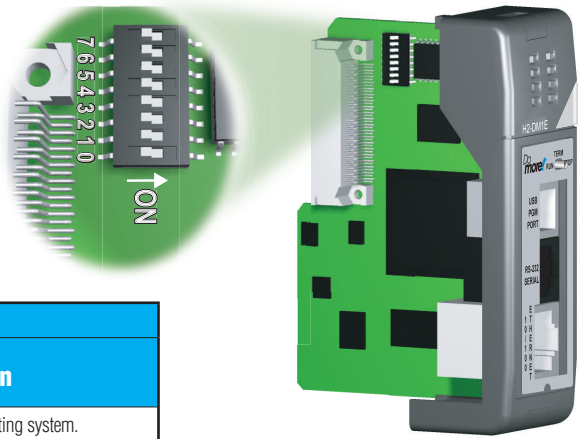

The default position for all of the DIP switches is OFF. The following table describes the position and function associated with each DIP switch.

DIP Switch Settings		
Switch Number	**Switch Position**	**Function**
0	ON	Load the oldest copy of the operating system.
1	ON	Do not load an Operating System, stay in the Booter.
2	ON	Disable the hardware watchdog timer - the hardware watchdog is always enabled, but this switch allows the user to override the ability of the Force Watchdog Error (WATCHDOG) and Debug Mode to generate a Watchdog condition.
3	ON	Disable ability to update the firmware and/or gate array.
4	ON	Reserved
5	ON	Reserved
6	ON	Reserved
7	ON	Reset the TCP/IP Network Settings to factory default values - Must be used with DIP #1

Do-more controllers make use of combinations of DIP switch settings and the Mode switch on the front of the controller to perform two reset functions. These reset functions can only be performed when the controller is in the boot loader.

The following sequence describes the steps necessary to perform one of the reset operations. This combination of DIP switch settings and mode switch manipulation is purposely complex to prevent these reset operations from being accidentally executed.

Clear only the Network Settings

This reset function will clear ONLY the Network settings, which consists of the Module ID, Module Name, Module Description, IP Address, Subnet Mask and Gateway Address.

- Begin by powering down the controller.
- Remove the controller from the base and record the location of the DIP switches (so they can be set back to their original position after the manual reset is finished).
- Next set ONLY DIP #1 and #7 ON to perform the Clear Only the Network Settings operation, make sure all other DIP switches are OFF.
- Reinstall the controller in the base.
- Set the controller mode switch to TERM (the center location) and power up the controller.
- At this point the LEFT bank of 4 LEDs should be blinking the 'stay in the boot loader sequence', that is, they should be blinking in sequence, from top to bottom then back to the top, alternating between red and green.
- Move the controller mode switch to RUN (to the left).
- Move the controller mode switch to TERM (to the center).
- Move the controller mode switch to RUN (to the left).
- Move the controller mode switch to TERM (to the center).
- Move the controller mode switch to STOP (to the right).
- Move the controller mode switch to TERM (to the center) - the LEFT bank of 4 LEDs should now be ON.

NOTE: *If you want to terminate the reset at this point you can do so by moving switch to RUN instead of STOP or powering down the controller.*

- Move the controller mode switch to STOP (to the right) - the RIGHT bank of 4 LEDs should now be ON.

NOTE: *If you want to terminate the manual reset at this point you can only do so by powering down the controller.*

- Move the controller mode switch to TERM (to the center) - the LEFT bank LEDs begin flashing the power up sequence, and the ROM led should briefly be ON indicating that the data in the ROM is being rewritten. The LEDs will then begin flashing the 'staying in boot loader' sequence indicating the reset is complete.
- Power down the controller.
- Remove the controller from the base and return the DIP switches to their original positions.
- Set the controller mode switch to TERM (in the center location).

Clear All

This reset function will clear everything from the controller, this includes the Network Settings as described previously, and the System Configuration, Memory Configuration, all control logic, all Documentation, and all of the User Accounts and Passwords.

- Begin by powering down the controller.
- Remove the controller from the base and record the location of the DIP switches (so they can be set back to their original position after the manual reset is finished).
- Next set all eight of the DIP switches ON to perform the Clear All operation.
- Reinstall the controller in the base.
- Set the controller mode switch to TERM (the center location) and power up the controller.
- At this point the LEFT bank of 4 LEDs should be blinking the 'stay in the boot loader sequence', that is, they should be blinking in sequence, from top to bottom then back to the top, alternating between red and green.
- Move the controller mode switch to RUN (to the left).
- Move the controller mode switch to TERM (to the center).
- Move the controller mode switch to RUN (to the left).
- Move the controller mode switch to TERM (to the center).
- Move the controller mode switch to STOP (to the right).
- Move the controller mode switch to TERM (to the center) - the LEFT bank of 4 LEDs should now be ON.

NOTE: *If you want to terminate the reset at this point you can do so by moving switch to RUN instead of STOP or powering down the controller.*

- Move the controller mode switch to STOP (to the right) - the RIGHT bank of 4 LEDs should now be ON.

NOTE: *If you want to terminate the manual reset at this point you can only do so by powering down the controller.*

- Move the controller mode switch to TERM (to the center) - the LEFT bank LEDs begin flashing the power up sequence, and the ROM led should briefly be ON indicating that the data in the ROM is being rewritten. The LEDs will then begin flashing the 'staying in boot loader' sequence indicating the reset is complete.
- Power down the controller.
- Remove the controller from the base and return the DIP switches to their original positions.
- Set the controller mode switch to TERM (in the center location).

Battery Replacement

All Do-more controllers have an onboard battery that maintains the contents of the retentive memory any time the power to the controller is lost. The battery has an expected lifespan of three years; after which the battery will need to be replaced. The battery is a standard CR2032, coin cell battery.

When the controller detects that the battery voltage is too low, and needs to be replaced, the PWR LED will be YELLOW instead of it's normal GREEN color. When Do-more Designer is online with the controller, the system-defined location $BatteryLow will be ON as well.

NOTE: *Make sure to have a current copy of the Do-more Designer project saved to Disk before performing this operation.*

- Power down the system containing the controller.
- Remove the controller from the base.
- Remove the battery from it's holder that is located on the back of the controller's PWB, in the lower right corner. The battery is removed by pushing on the back of the battery to begin sliding it out of the holder, then pulling it the rest of the way out by the front edge of the battery. Make note of how the battery is aligned in the holder.

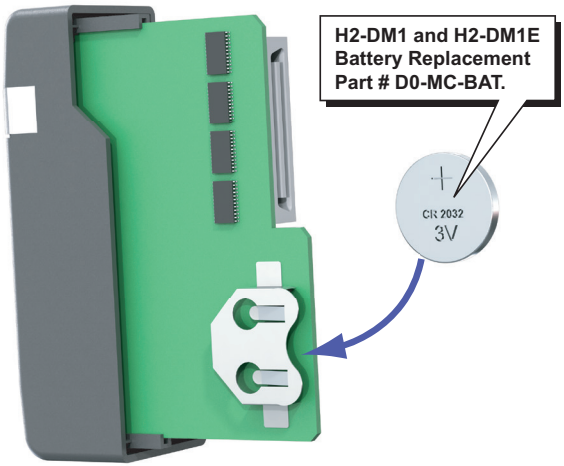

NOTE: *The controller has an onboard capacitor that will maintain the retentive memory contents while the battery is being replaced. This capacitor has a two-hour runtime, which should be more than enough to replace the battery.*

- Insert the new battery into the holder, making sure the alignment is correct.
- Reinstall the controller in the base.
- Power up the system containing the controller.
- Verify that the PWR LED is now GREEN instead of YELLOW and the system-defined location $BatteryLow will be OFF.

Specifications: Base Units

In This Chapter...

Base Unit Overview **4–2**
Choosing a Base Type 4–2
AC Powered Base Units **4–3**
24VDC Powered Base Units **4–4**
125VDC Powered Base Units **4–5**
Power Budget **4–6**
Power Budget Example 4–6
Power Requirements 4–7

Base Unit Overview

For the Do-more H2 Series PLC there are four base sizes available: 3, 4, 6 and 9 slot. All bases include a built-in power supply and can be purchased for use with AC or DC sources.

NOTE: *The Do-more H2 Series PLC does not support local expansion, only local and Ethernet remote I/O configurations.*

Choosing a Base Type

The Do-more PLC offers 10 base configurations, four chassis sizes with different power supply options. The following diagram shows an example of a 6-slot base.

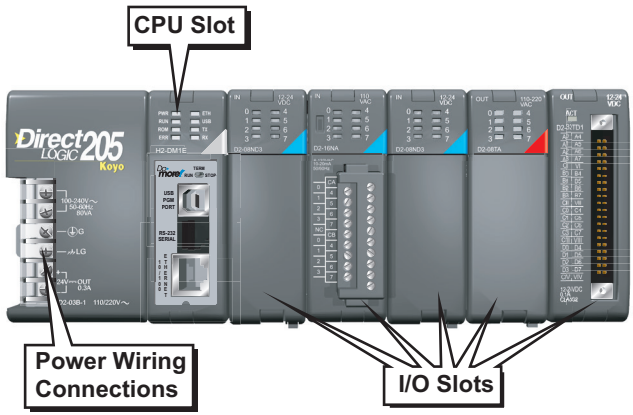

Your choice of base depends on three things:

- Number of I/O modules required
- Input power requirement (AC or DC power)
- Available power budget

The following pages contain details and specifications on the different base options. For installation and wiring information, refer to the "Installation and Wiring" chapter of this manual.

AC Powered Base Units

D2-03B-1

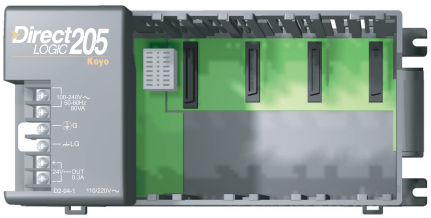

D2-04B-1

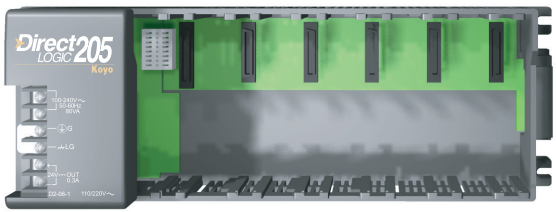

D2-06B-1

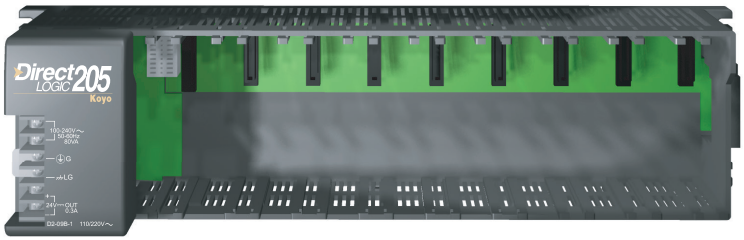

D2-09B-1

Specification	100–240 VAC Powered Bases
Input Voltage Range	100–240 VAC (+10%/ –15%) 50/60 Hz
Maximum Inrush Current	30A
Maximum Power	80VA
Voltage Withstand (dielectric)	1 minute @ 1500VAC between primary, secondary, and field ground
Insulation Resistance	> 10MΩ at 500VDC
Auxiliary 24VDC Output	20–28 VDC, less than 1V p-p 300mA max.
Fusing (internal to base power supply)	Non–replaceable 2A @ 250V slow blow fuse

24VDC Powered Base Units

D2-03BDC1-1

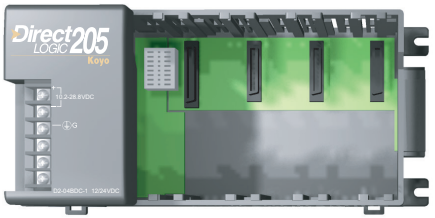

D2-04BDC1-1

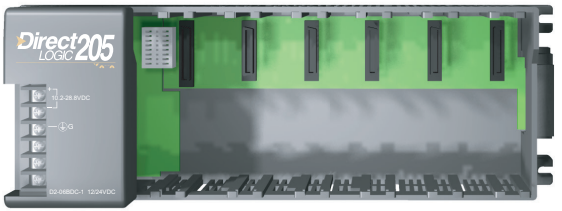

D2-06BDC1-1

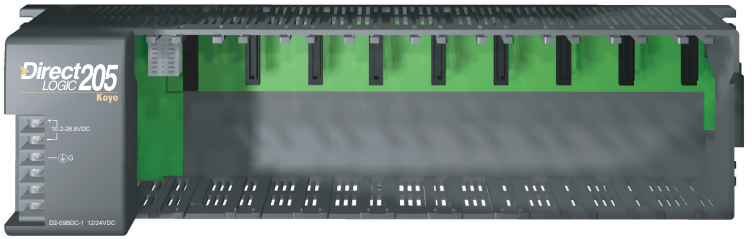

D2-09BDC1-1

Specification	12–24 VDC Powered Bases
Input Voltage Range	10.2–28.8 VDC with less than 10% ripple
Maximum Inrush Current	10A
Maximum Power	25W
Voltage Withstand (dielectric)	1 minute @ 1500VAC between primary, secondary, and field ground
Insulation Resistance	> 10MΩ at 500VDC
Auxiliary 24VDC Output	None
Fusing (internal to base power supply)	Non–replaceable 3.15 A @ 250V slow blow fuse

125VDC Powered Base Units

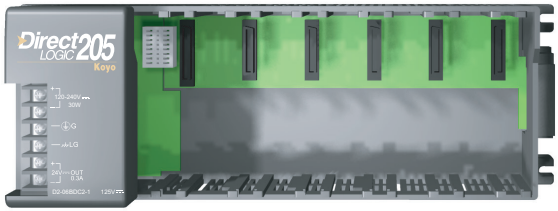

D2-06BDC2-1

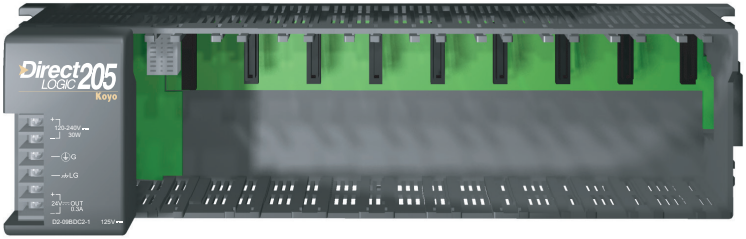

D2-09BDC2-1

Specification	104–240 VDC Powered Bases
Input Voltage Range	104–240 VDC +10% –15%
Maximum Inrush Current	20A
Maximum Power	30W
Voltage Withstand (dielectric)	1 minute @ 1500VAC between primary, secondary, and field ground
Insulation Resistance	> 10MΩ at 500VDC
Auxiliary 24VDC Output	20–28 VDC, less than 1V p-p 300mA max.
Fusing (internal to base power supply)	Non–replaceable 2A @ 250V slow blow fuse

Power Budget

When determining the types and quantity of I/O modules you will be using, it is important to remember there is a defined amount of power available from the base power supply. The charts on the next page indicates the power supplied and used by each module. The chart below shows an example of how to calculate the power used by your particular system. These charts should make it easy for you to determine if the devices you have chosen will operate within the power budget of your system configuration. If the I/O you have chosen exceeds the maximum power available from the power supply, you may be able to resolve the problem by using remote I/O bases.

Power Budget Example

The example below shows how to calculate the power budget for the Do-more PLC system. The examples are constructed around a single 9-slot base using the devices shown. It is recommended that you construct a similar table for your Do-more PLC system. Follow the following steps to determine your power budget.

1. Using a chart similar to the one below, fill in column 2.
2. Using the tables on the next page, enter the current supplied and used by each device (columns 3 and 4). Devices which fall into the "Other" category (Row D) are devices such as the C-more Micro interface, which also have power requirements, but do not directly plug into the base.
3. Add the current used by the system devices (columns 3 and 4) starting with the CPU slot and put the total in the row labeled "Maximum Current Required" (Row E).
4. Subtract the row labeled "Maximum Current Required" (Row E), from the row labeled "Current Supplied" (Row B). Place the difference in the row labeled "Remaining Current Available" (Row F).
5. If "Maximum Current Required" is greater than "Current Supplied" in either column 3 or 4, the power budget will be exceeded. It will be unsafe to use this configuration, and you will need to restructure your I/O configuration. Note the auxiliary power supply does not need to supply all the external power. If you need more than the 300mA supplied, you can add an external 24V power supply. This will help keep you within your power budget for external power.

A	Column 1	Column 2	Column 3	Column 4
		Device Type	5VDC (mA)	External Power 24 VDC (mA)
B	CURRENT SUPPLIED			
	Base	9 slot	2,600	300
C	CURRENT REQUIRED			
	CPU SLOT	H2-DM1E	275	0
	SLOT 0	D2-16ND3-2	100	0
	SLOT 1	D2-16ND3-2	100	0
	SLOT 2	D2-16NA	100	0
	SLOT 3	D2-08NA-1	50	0
	SLOT 4	D2-16TD1-2	200	80
	SLOT 5	D2-08TA	250	0
	SLOT 6	D2-08TA	250	0
	SLOT 7			
D	OTHER			
	Operator interface	EA1-S3ML	90	0
E	Maximum Current Required		1415	80
F	Remaining Current Available		2600-1415=1185	300-80=220

Power Requirements

The charts below show the amount of power supplied by each of the base power supplies and the amount of power consumed by each module. The Power Consumed charts list how much INTERNAL power from each power source is required for the modules. Use this information when calculating the power budget for your system.

In addition to the internal power sources, bases offer a 24VDC auxiliary power supply with external power connections. This auxiliary power supply can power external devices.

Power Supplied					
Device	**5V(mA)**	**24V Auxiliary**	**Device**	**5V(mA)**	**24V Auxiliary**
Bases			**Bases**		
D2-03B-1	2600	300	D2-04BDC1-1	2600	None
D2-04B-1	2600	300	D2-06BDC1-1	2600	None
D2-06B-1	2600	300	D2-09BDC1-1	2600	None
D2-09B-1	2600	300	D2-06BDC2-1	2600	300
D2-03BDC1-1	2600	None	D2-09BDC2-1	2600	300

Power Consumed		
Device	**5V(mA)**	**24V Auxiliary**
CPUs		
H2-DM1	250	0
H2-DM1E	275	0
DC Input Modules		
D2-08ND3	50	0
D2-16ND3-2	100	0
D2-32ND3	25	0
D2-32ND3-2	25	0
AC Input Modules		
D2-08NA-1	50	0
D2-08NA-2	100	0
D2-16NA	100	0
DC Output Modules		
D2-04TD1	60	20
D2-08TD1	100	0
D2-08TD2	100	0
D2-16TD1-2	200	80
D2-16TD2-2	200	0
F2-16TD1P	70	50
F2-16TD2P	70	50
D2-32TD1	350	0
D2-32TD2	350	0

Power Consumed		
Device	**5V(mA)**	**24V Auxiliary**
AC Output Modules		
D2-08TA	250	0
F2-08TA	250	0
D2-12TA	350	0
Relay Output Modules		
D2-04TRS	250	0
D2-08TR	250	0
F2-08TR	670	0
F2-08TRS	670	0
D2-12TR	450	0
Combination In/Out Module		
D2-08CDR	200	0
Analog Modules		
F2-04AD-1	100	5
F2-04AD-2	110	5
F2-08AD-1	100	5
F2-08AD-2	100	5
F2-02DA-1	40	60 (note 1)
F2-02DA-1L	40	70 @ 12V (note 1)
F2-02DA-2	40	60
F2-02DA-2L	40	70 @ 12V
F2-02DAS-1	100	50 / channel

Power Consumed		
Device	**5V(mA)**	**24V Auxiliary**
Analog Modules (continued)		
F2-02DAS-2	100	60 / channel
F2-08DA-1	30	50 (note 1)
F2-08DA-2	60	140
F2-4AD2DA	60	80 (note 1)
F2-8AD4DA-1	35	100 (note 1)
F2-8AD4DA-2	35	80 (note 1)
F2-04RTD	90	0
F2-04THM	110	60
Specialty Modules		
H2-CTRIO [2]	400	0
H2-CTRIO2	275	0
H2-EBC100	300	0
H2-EBC-F	640	0
H2-ECOM100	300	0
H2-ECOM-F	640	0
H2-ERM(100)	320(300)	0
H2-ERM-F	450	0
H2-SERIO	80	0
H2-SERIO-4	80	0
F2-08SIM	50	0

1: Add an additional 20mA per output loop.
2: H2-CTRIO has been discontinued, use H2-CTRIO2.

Notes:

Specifications: Discrete I/O Modules

In This Chapter...

Discrete I/O Modules Overview **5–3**
Discrete Input Modules 5–3
Discrete Output Modules 5–4
Discrete Input/Output Module 5–4
D2-08ND3, DC Input **5–5**
D2-16ND3-2, DC Input **5–6**
D2–32ND3, DC Input **5–7**
D2–32ND3–2, DC Input **5–8**
D2–08NA-1, AC Input **5–9**
D2-08NA-2, AC Input **5–10**
D2-16NA, AC Input **5–11**
D2-04TD1, DC Output **5–12**
D2–08TD1, DC Output **5–13**
D2–08TD2, DC Output **5–14**
D2–16TD1–2, DC Output **5–15**
D2–16TD2–2, DC Output **5–16**
F2–16TD1P, DC Output With Fault Protection **5–17**
F2–16TD2P, DC Output with Fault Protection **5–19**
D2–32TD1, DC Output **5–21**
D2–32TD2, DC Output **5–22**
F2–08TA, AC Output **5–23**
D2–08TA, AC Output **5–24**
D2–12TA, AC Output **5–25**

D2–04TRS, Relay Output 5–26
D2–08TR, Relay Output 5–27
F2–08TR, Relay Output 5–28
F2–08TRS, Relay Output 5–29
D2–12TR, Relay Output 5–30
D2–08CDR, 4 pt. DC Input / 4pt. Relay Output 5–31

Discrete I/O Modules Overview

There are 25 discrete I/O modules available for use in local and remote I/O bases. The specifications and wiring diagrams for these modules are found in this chapter. Each discrete I/O module is identified as an "Input", "Output" or "Input/Output" module using the color coding scheme shown below. A blue bar on the front panel signifies an Input I/O module, a red bar signifies an Output I/O module and a White bar signifies a combination Input/Output module.

Discrete Input Modules

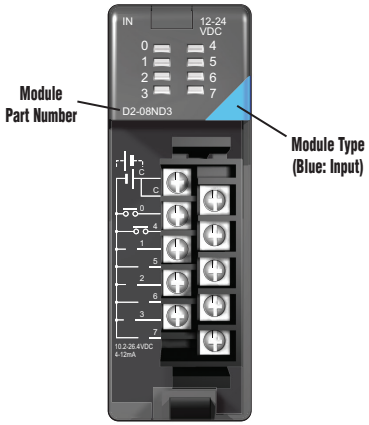

Discrete Input Modules			
Part Number	Number of Inputs	Description	See Page
D2-08ND3	8	Sinking/Sourcing DC Input	5-4
D2-16ND3-2	16	Isolated Sinking/Sourcing DC Input	5-5
D2-32ND3	32	Isolated Sinking/Sourcing DC Input	5-6
D2-32ND3-2	32	Isolated Sinking/Sourcing DC Input	5-7
D2-08NA-1	8	AC Input	5-8
D2-08NA-2	8	AC Input	5-9
D2-16NA	16	Isolated AC Input	5-10

Discrete I/O Modules Overview, continued

Discrete Output Modules

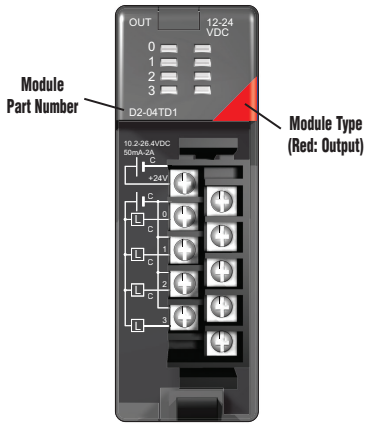

Discrete Output Modules			
Part Number	Number of Outputs	Description	See Page
D2-04TD1	4	Sinking Output	5-11
D2-08TD1	8	Sinking Output	5-12
D2-08TD2	8	Sourcing Output	5-13
D2-16TD1-2	16	Sinking Output	5-14
D2-16TD2-2	16	Sourcing Output	5-15
F2-16TD1P	16	Protected Sinking Output	5-16
F2-16TD2P	16	Protected Sourcing Output	5-18
D2-32TD1	32	Sinking Output	5-20
D2-32TD2	32	Sourcing Output	5-21
F2-08TA	8	AC Output	5-22
D2-08TA	8	AC Output	5-23
D2-12TA	12	AC Output	5-24
D2-04TRS	4	Isolated Relay Output	5-25
D2-08TR	8	Relay Output	5-26
F2-08TR	8	Relay Output	5-27
F2-08TRS	8	Isolated Relay Output	5-28
D2-12TR	12	Relay Output	5-29

Discrete Input/Output Module

Discrete Input/Output Modules				
Part Number	Number of Inputs	Number of Outputs	Description	See Page
D2-08CDR	4	4	Sinking/Sourcing DC Input with Relay Output	5-30

D2-08ND3, DC Input

D2-08ND3 DC Input	
Inputs per Module	8 (sink/source)
Commons per Module	1 (2 I/O terminal points)
Input Voltage Range	10.2-26.4 VDC
Peak Voltage	26.4 VDC
ON Voltage Level	9.5 VDC minimum
OFF Voltage Level	3.5 VDC maximum
AC Frequency	N/A
Input Impedance	2.7 kΩ
Input Current	4.0 mA @ 12VDC 8.5 mA @ 24VDC
Minimum ON Current	3.5 mA
Maximum OFF Current	1.5 mA
Base Power Required 5VDC	50mA
OFF to ON Response	1 to 8 ms
ON to OFF Response	1 to 8 ms
Terminal Type (included)	Removable, D2-8IOCON
Status Indicator	Logic side
Weight	2.3 oz. (65g)
ZIPLink Module	ZL-RTB20 (Feedthrough)
ZIPLink Cable	ZL-D2-CBL10 (0.5m) ZL-D2-CBL10-1 (1.0m) ZL-D2-CBL10-2 (2.0m)

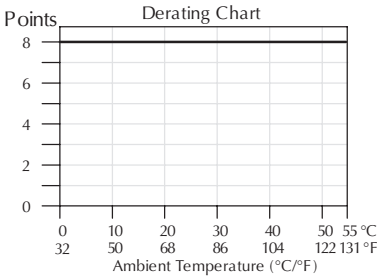

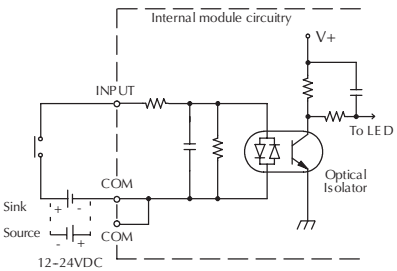

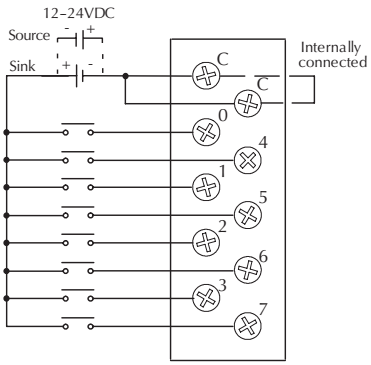

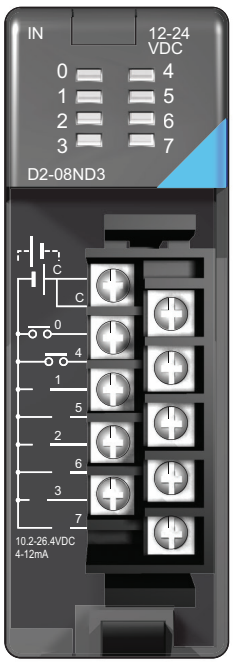

D2-16ND3-2, DC Input

D2-16ND3-2 DC Input	
Inputs per Module	16 (sink/source)
Commons per Module	2 isolated (8 I/O terminal points/com)
Input Voltage Range	20–28 VDC
Peak Voltage	30VDC (10mA)
ON Voltage Level	19VDC minimum
OFF Voltage Level	7VDC maximum
AC Frequency	N/A
Input Impedance	3.9 kΩ
Input Current	6mA @ 24VDC
Minimum ON Current	3.5 mA
Maximum OFF Current	1.5 mA
Base Power Required 5VDC	100mA
OFF to ON Response	3 to 9 ms
ON to OFF Response	3 to 9 ms
Terminal Type (included)	Removable, D2-16IOCON
Status Indicator	Logic side
Weight	2.3 oz. (65g)
ZIPLink Module	ZL-RTB20 (Feedthrough) ZL-LTB16-24 (Sensor Input)
ZIPLink Cable	ZL-D2-CBL19 (0.5 m) ZL-D2-CBL19-1 (1.0 m) ZL-D2-CBL19-2 (2.0 m) ZL-D2-CBL19-1P (1.0 m Pigtail) ZL-D2-CBL19-2P (2.0 m Pigtail)

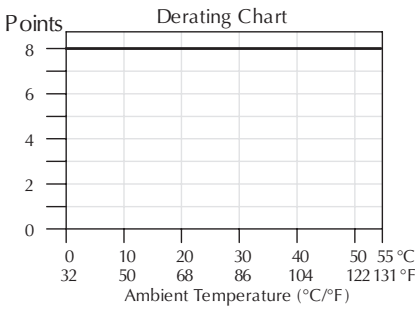

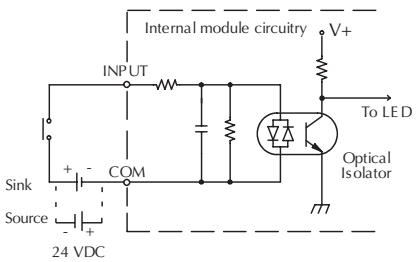

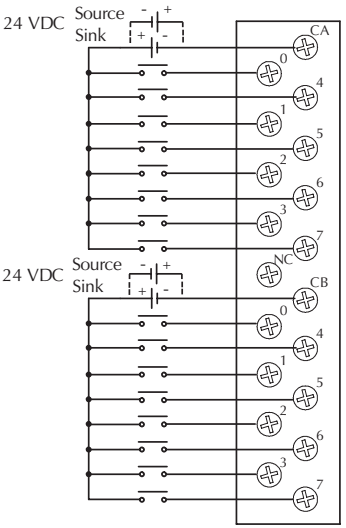

D2–32ND3, DC Input

D2-32ND3 DC Input	
Inputs per Module	32 (sink/source)
Commons per Module	4 isolated (8 I/O terminal points / com)
Input Voltage Range	20–28 VDC
Peak Voltage	30VDC
ON Voltage Level	19VDC minimum
OFF Voltage Level	7VDC maximum
AC Frequency	N/A
Input Impedance	4.8 kΩ
Input Current	8.0 mA @ 24VDC
Minimum ON Current	3.5 mA
Maximum OFF Current	1.5 mA
Base Power Required 5VDC	25mA
OFF to ON Response	3 to 9 ms
ON to OFF Response	3 to 9 ms
Terminal Type (not included)	Removable 40-pin Connector[1]
Status Indicator	Module Activity LED
Weight	2.1 oz. (60g)
ZIPLink Module	ZL-RTB40 (Feedthrough) ZL-LTB32-24 (Sensor Input)
ZIPLink Cable	ZL-D24-CBL40 (0.5 m) ZL-D24-CBL40-1 (1.0 m) ZL-D24-CBL40-2 (2.0 m) ZL-D24-CBL40-1P (1.0 m Pigtail) ZL-D24-CBL40-2P (2.0 m Pigtail)
ZIPLink connector is recommended or purchase custom connector separately.	

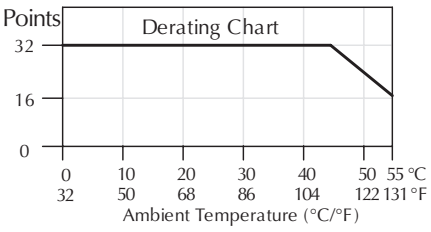

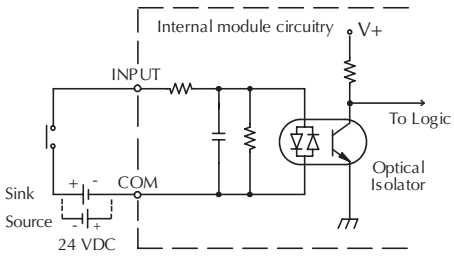

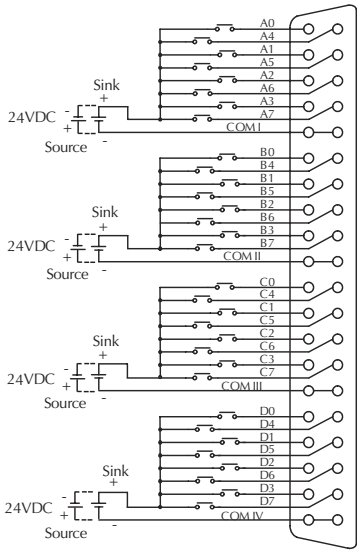

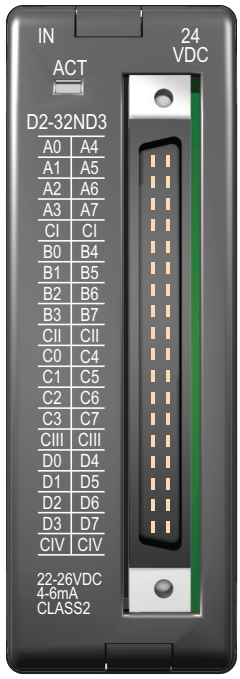

D2–32ND3–2, DC Input

D2-32ND3-2 DC Input	
Inputs per Module	32 (Sink/Source)
Commons per Module	4 isolated (8 I/O terminal points / com)
Input Voltage Range	4.50 to 15.6 VDC min. to max.
Peak Voltage	16VDC
ON Voltage Level	4VDC minimum
OFF Voltage Level	2VDC maximum
AC Frequency	N/A
Input Impedance	1.0 kΩ @ 5–15 VDC
Input Current	4mA @ 5VDC 11mA @ 12VDC 14mA @ 15VDC
Maximum Input Current	16mA @ 15.6 VDC
Minimum ON Current	3mA
Maximum OFF Current	0.5 mA
Base Power Required 5VDC	25mA
OFF to ON Response	3 to 9 ms
ON to OFF Response	3 to 9 ms
Terminal Type (not included)	Removable 40-pin connector[1]
Status Indicator	Module activity LED
Weight	2.1 oz (60g)
ZIPLink Module	ZL-RTB40 (Feedthrough) ZL-LTB32-24 (Sensor Input)
ZIPLink Cable	ZL-D24-CBL40 (0.5 m) ZL-D24-CBL40-1 (1.0 m) ZL-D24-CBL40-2 (2.0 m) ZL-D24-CBL40-1P (1.0 m Pigtail) ZL-D24-CBL40-2P (2.0 m Pigtail)
ZIPLink connector is recommended or purchase custom connector separately.	

Derating Chart

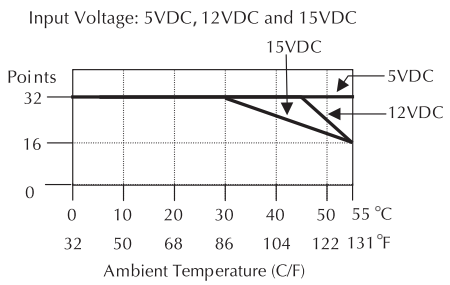

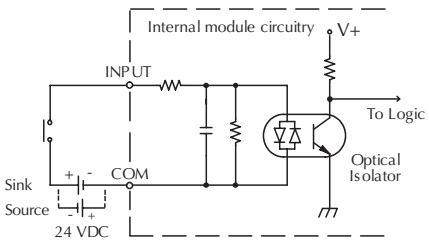

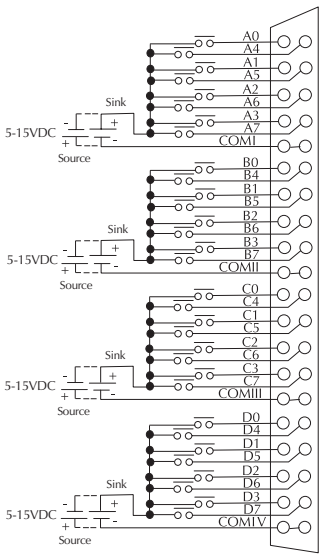

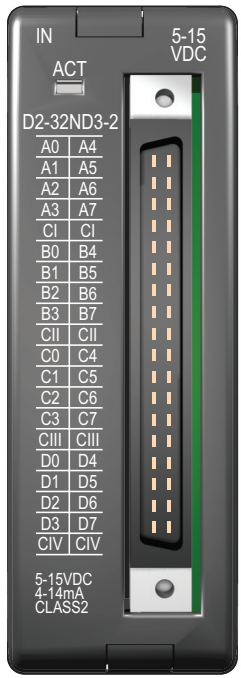

D2–08NA-1, AC Input

D2-08NA-1 AC Input	
Inputs per Module	8
Commons per Module	1 (2 I/O terminal points)
Input Voltage Range	80–132 VAC
Peak Voltage	132VAC
ON Voltage Level	75VAC minimum
OFF Voltage Level	20VAC maximum
AC Frequency	47–63 Hz
Input Impedance	12kΩ @ 60Hz
Input Current	13mA @ 100VAC, 60Hz 11mA @ 100VAC, 50Hz
Minimum ON Current	5mA
Maximum OFF Current	2mA
Base Power Required 5VDC	50mA
OFF to ON Response	5 to 30 ms
ON to OFF Response	10 to 50 ms
Terminal Type (included)	Removable; D2-8IOCON
Status Indicator	Logic side
Weight	2.5 oz. (70g)
ZIPLink Module	ZL-RTB20 (Feedthrough)
ZIPLink Cable	ZL-D2-CBL10 (0.5 m) ZL-D2-CBL10-1 (1.0 m) ZL-D2-CBL10-2 (2.0 m)

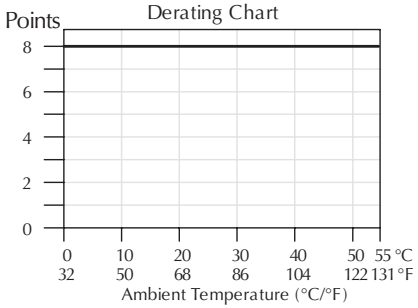

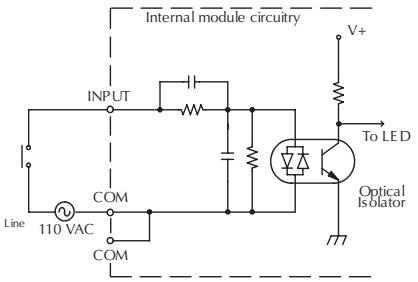

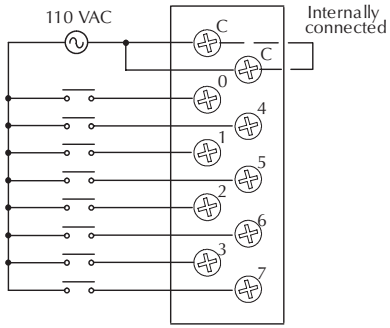

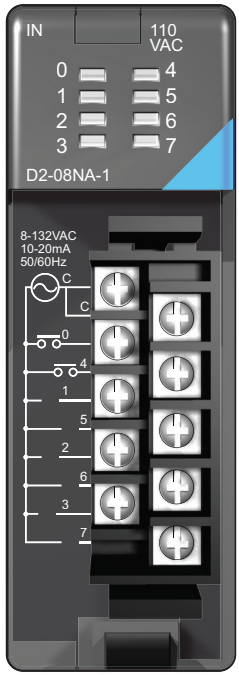

D2-08NA-2, AC Input

D2-08NA-2 AC Input	
Inputs per Module	8
Commons per Module	1 (2 I/O terminal points)
Input Voltage Range	170–265 VAC
Peak Voltage	265VAC
ON Voltage Level	150VAC minimum
OFF Voltage Level	40VAC maximum
AC Frequency	47–63 Hz
Input Impedance	18kΩ @ 60 Hz
Input Current	9mA @ 220VAC, 50Hz 11mA @ 265VAC, 50Hz 10mA @ 220VAC, 60Hz 12mA @ 265VAC, 60Hz
Minimum ON Current	10mA
Maximum OFF Current	2mA
Base Power Required 5VDC	100mA
OFF to ON Response	5 to 30 ms
ON to OFF Response	10 to 50 ms
Terminal Type (included)	Removable; D2-8IOCON
Status Indicator	Logic side
Weight	2.5 oz. (70g)
ZIPLink Module	ZL-RTB20 (Feedthrough)
ZIPLink Cable	ZL-D2-CBL10 (0.5 m) ZL-D2-CBL10-1 (1.0 m) ZL-D2-CBL10-2 (2.0 m)

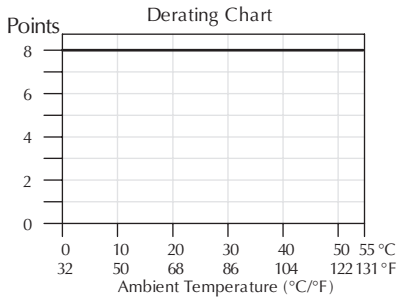

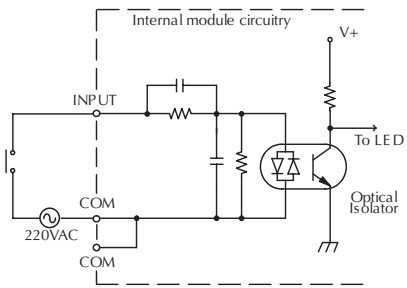

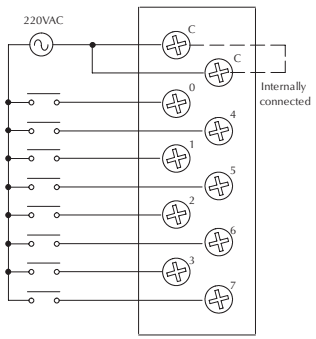

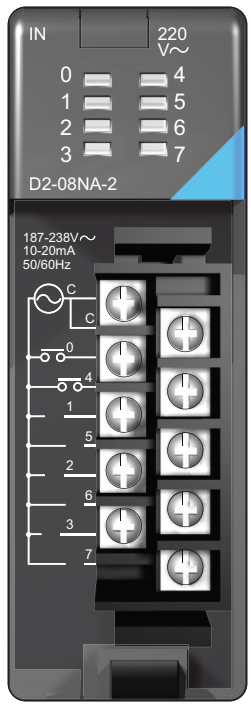

D2-16NA, AC Input

D2-16NA AC Input	
Inputs per Module	16
Commons per Module	2 (isolated)
Input Voltage Range	80–132 VAC
Peak Voltage	132VAC
ON Voltage Level	70VAC minimum
OFF Voltage Level	20VAC maximum
AC Frequency	47–63 Hz
Input Impedance	12kΩ @ 60Hz
Input Current	11mA @ 100VAC, 50Hz 13mA @ 100VAC, 60Hz 15mA @ 132VAC, 60Hz
Minimum ON Current	5mA
Maximum OFF Current	2mA
Base Power Required 5VDC	100mA
OFF to ON Response	5 to 30 ms
ON to OFF Response	10 to 50 ms
Terminal Type (included)	Removable; D2-16IOCON
Status Indicator	Logic side
Weight	2.4 oz. (68g)
ZIPLink Module	ZL-RTB20 (Feedthrough)
ZIPLink Cable	ZL-D2-CBL19 (0.5 m) ZL-D2-CBL19-1 (1.0 m) ZL-D2-CBL19-2 (2.0 m) ZL-D2-CBL19-1P (1.0 m Pigtail) ZL-D2-CBL19-2P (2.0 m Pigtail)

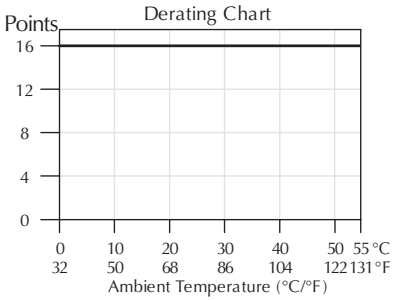

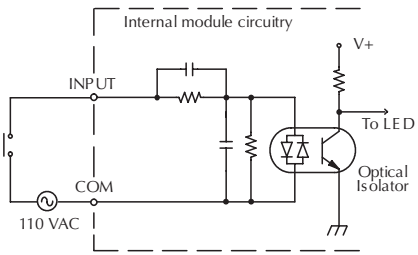

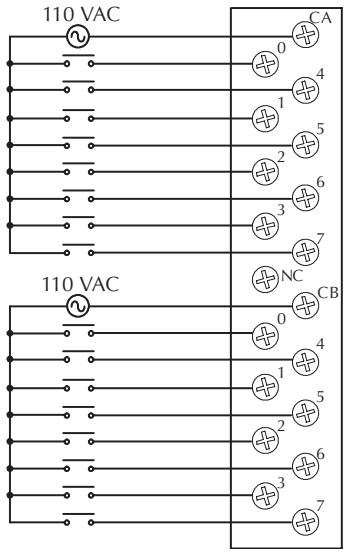

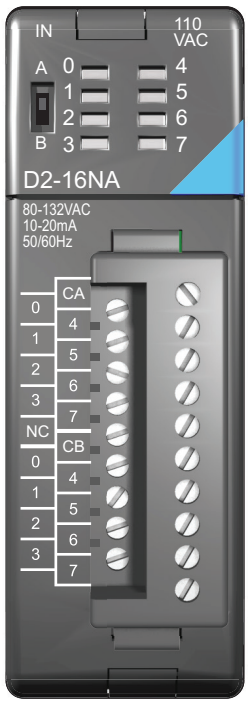

D2-04TD1, DC Output

D2-04TD1 DC Output	
Outputs per Module	4 (current sinking)
Output Points Consumed	8 points (only first 4 pts. used)
Commons per Module	1 (4 I/O terminal points)
Output Type	NMOS FET (open drain)
Operating Voltage	10.2–26.4 VDC
Peak Voltage	40VDC
ON Voltage Drop	0.72 VDC maximum
AC Frequency	N/A
Max Load Current (resistive)	4A/point 8A/common
Max Leakage Current	0.1 mA @ 40VDC
Max Inrush Current	6A for 100ms, 15A for 10ms
Minimum Load Current	50mA
External DC Required	24VDC @ 20mA max.
Base Power Required 5VDC	60mA
OFF to ON Response	1ms
ON to OFF Response	1ms
Terminal Type (included)	Removable; D2-8IOCON
Status Indicator	Logic side
Weight	2.8 oz. (80g)
Fuses	4 (1 per point) (6.3 A slow blow, non-replaceable)
ZIPLink Module*	ZL-RTB20 (Feedthrough)
ZIPLink Cable*	ZL-D2-CBL10 (0.5 m) ZL-D2-CBL10-1 (1.0 m) ZL-D2-CBL10-2 (2.0 m)
****D2-04TD1 outputs are derated not to exceed 2 Amps per point and 2 Amps per common when using the ZIPLink wiring system.***	

Inductive Load
Maximum Number of Switching Cycles per Minute

Load Current	Duration of output in ON state 7ms	40ms	100ms
0.1A	8000	1400	600
0.5A	1600	300	120
1.0A	800	140	60
1.5A	540	90	35
2.0A	400	70	–
3.0A	270	–	–
4.0A	200	–	–

At 40mS duration, loads of 3.0 A or greater cannot be used.

At 100mS duration, loads of 2.0 A or greater cannot be used.

Find the load current you expect to use and the duration that the output is ON. The number at the intersection of the row and column represents the switching cycles per minute. For example, a 1A inductive load that is on for 100 ms can be switched on and off a maximum of 60 times per minute. To convert this to duty cycle percentage use: (duration x cycles)/60. In this example, (60 x 0.1)/60 = 0.1, or 10% duty cycle.

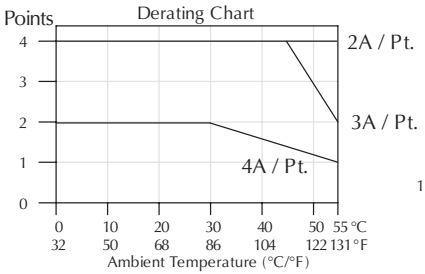

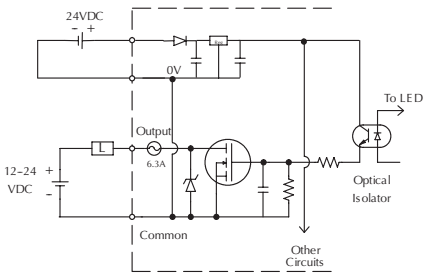

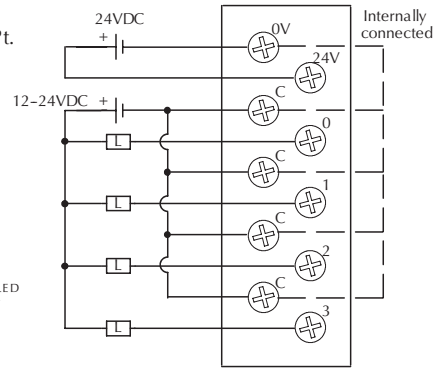

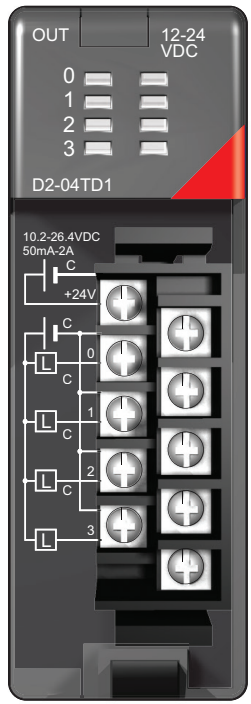

D2–08TD1, DC Output

D2-08TD1 DC Output	
Outputs per Module	8 (current sinking)
Commons per Module	1 (2 I/O terminal points)
Output Type	NPN open collector
Operating Voltage	10.2–26.4 VDC
Peak Voltage	40VDC
ON Voltage Drop	1.5 VDC maximum
AC Frequency	N/A
Minimum Load Current	0.5 mA
Max Load Current	0.3 A/point; 2.4 A/common
Max Leakage Current	0.1 mA @ 40VDC
Max Inrush Current	1A for 10ms
Base Power Required 5VDC	100mA
OFF to ON Response	1ms
ON to OFF Response	1ms
Terminal Type (included)	Removable; D2-8IOCON
Status Indicator	Logic side
Weight	2.3 oz. (65g)
Fuses	1 per common 5A fast blow, non-replaceable
ZIPLink Module	ZL-RTB20 (Feedthrough)
ZIPLink Cable	ZL-D2-CBL10 (0.5 m) ZL-D2-CBL10-1 (1.0 m) ZL-D2-CBL10-2 (2.0 m)

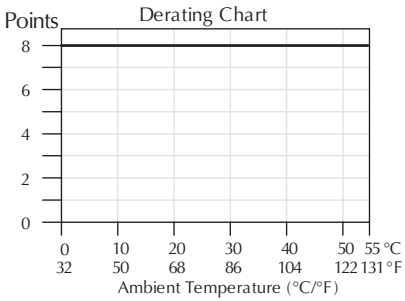

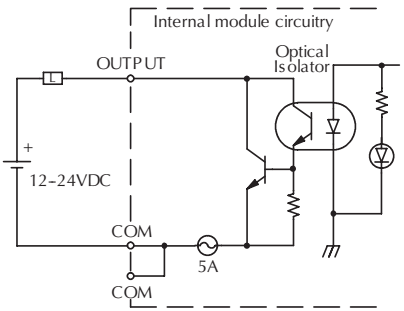

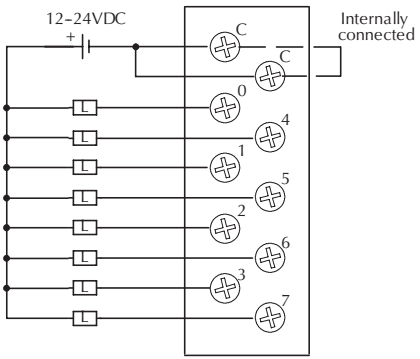

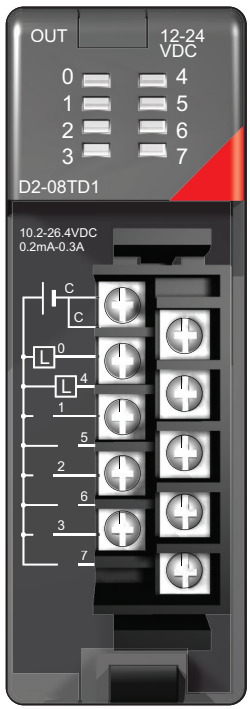

D2–08TD2, DC Output

D2-08TD2 DC Output	
Outputs per Module	8 (current sourcing)
Commons per Module	1
Output Type	PNP open collector
Operating Voltage	12 to 24 VDC
Output Voltage	10.8 to 26.4 VDC
Peak Voltage	40VDC
ON Voltage Drop	1.5 VDC
AC Frequency	N/A
Minimum Load Current	N/A
Max Load Current	0.3 A per point; 2.4 A per common
Max Leakage Current	1.0 mA @ 40VDC
Max Inrush Current	1A for 10ms
Base Power Required 5VDC	100mA
OFF to ON Response	1ms
ON to OFF Response	1ms
Terminal Type (included)	Removable; D2-8IOCON
Status Indicator	Logic side
Weight	2.1 oz. (60g)
Fuses	1 per common 5A fast blow, non-replaceable
ZIPLink Module	ZL-RTB20 (Feedthrough)
ZIPLink Cable	ZL-D2-CBL10 (0.5 m) ZL-D2-CBL10-1 (1.0 m) ZL-D2-CBL10-2 (2.0 m)

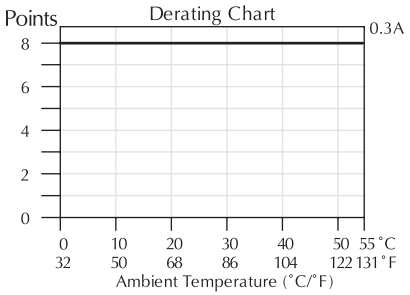

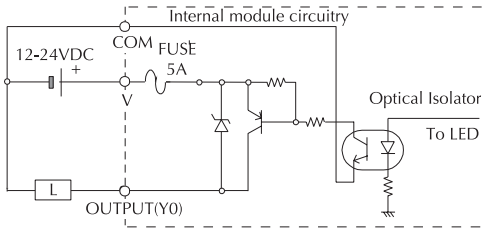

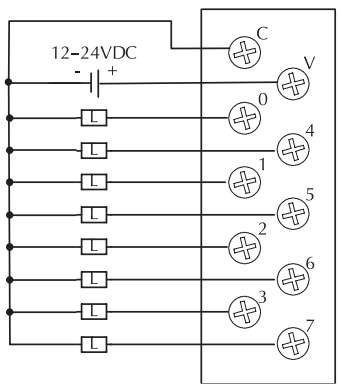

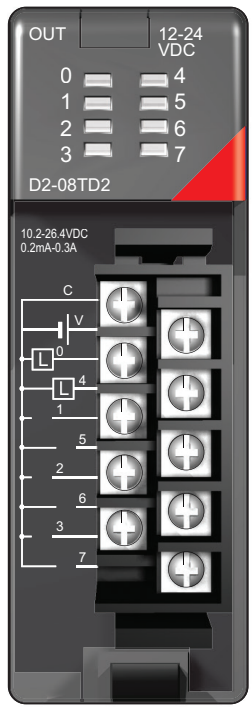

D2–16TD1–2, DC Output

D2-16TD1-2 DC Output	
Outputs per Module	16 (current sinking)
Commons per Module	1 (2 I/O terminal points)
Output Type	NPN open collector
External DC required	24VDC ±4V @ 80mA max
Operating Voltage	10.2–26.4 VDC
Peak Voltage	30VDC
ON Voltage Drop	0.5 VDC maximum
AC Frequency	N/A
Minimum Load Current	0.2 mA
Max Load Current	0.1 A/point 1.6 A/common
Max Leakage Current	0.1 mA @ 30VDC
Max Inrush Current	150mA for 10ms
Base Power Required 5VDC	200mA
OFF to ON Response	0.5 ms
ON to OFF Response	0.5 ms
Terminal Type (included)	Removable; D2-16IOCON
Status Indicator	Logic side
Weight	2.3 oz. (65g)
Fuses	None
ZIPLink Module	ZL-RTB20 (Feedthrough) ZL-RFU20 (Fuse) ZL-RRL16-24 (Relay)
ZIPLink Cable	ZL-D2-CBL19 (0.5 m) ZL-D2-CBL19-1 (1.0 m) ZL-D2-CBL19-2 (2.0 m) ZL-D2-CBL19-1P (1.0 m Pigtail) ZL-D2-CBL19-2P (2.0 m Pigtail)

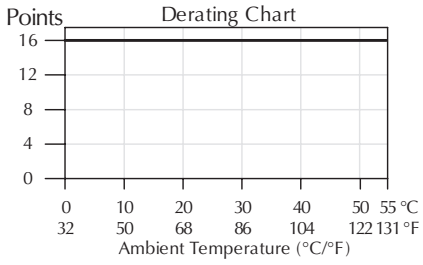

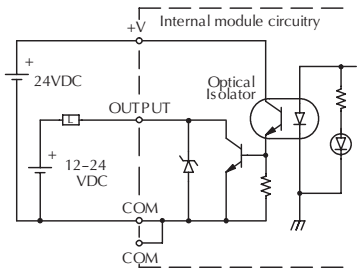

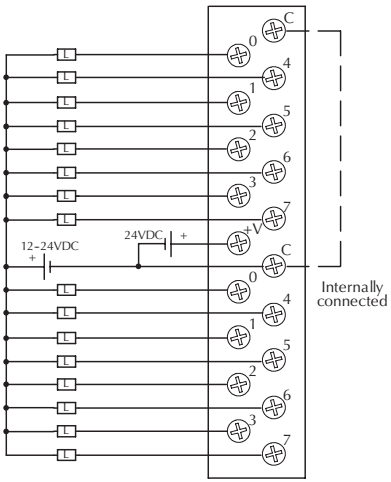

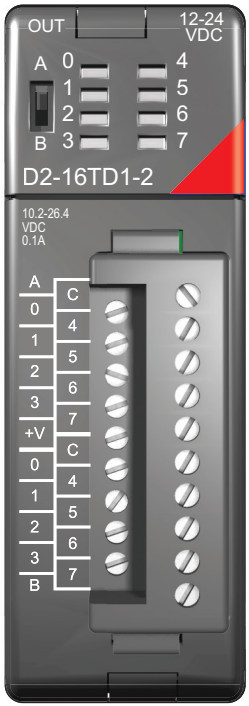

*Can also be used with 5VDC supply

D2–16TD2–2, DC Output

D2-16TD2-2 DC Output	
Outputs per Module	16 (current sourcing)
Commons per Module	2
Output Type	NPN open collector
Operating Voltage	10.2–26.4 VDC
Peak Voltage	30VDC
ON Voltage Drop	1.0 VDC maximum
AC Frequency	N/A
Minimum Load Current	0.2 mA
Max Load Current	0.1 A/point 1.6 A/module
Max Leakage Current	0.1 mA @ 30VDC
Max Inrush Current	150mA for 10ms
Base Power Required 5VDC	200mA
OFF to ON Response	0.5 ms
ON to OFF Response	0.5 ms
Terminal Type (included)	Removable; D2-16IOCON
Status Indicator	Logic side
Weight	2.8 oz. (80g)
Fuses	None
ZIPLink Module	ZL-RTB20 (Feedthrough) ZL-RFU20 (Fuse)
ZIPLink Cable	ZL-D2-CBL19 (0.5 m) ZL-D2-CBL19-1 (1.0 m) ZL-D2-CBL19-2 (2.0 m) ZL-D2-CBL19-1P (1.0 m Pigtail) ZL-D2-CBL19-2P (2.0 m Pigtail)

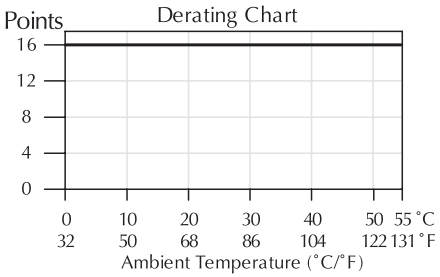

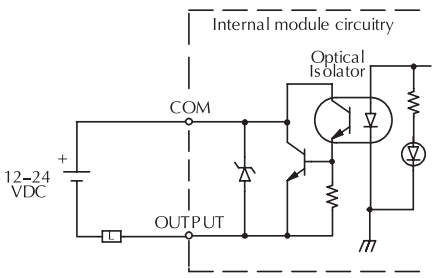

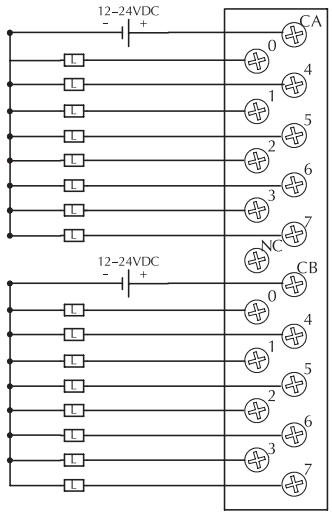

F2–16TD1P, DC Output With Fault Protection

F2-16TD1P DC Output with Fault Protection	
Inputs per module	16 (status indication)
Outputs per module	16 (current sinking)
Commons per module	1 (2 I/O terminal points)
Output type	NMOS FET (open drain)
Operating voltage	10.2–26.4 VDC, external
Peak voltage	40VDC
AC frequency	N/A
ON voltage drop	0.7 V (output current 0.5 A)
Overcurrent trip	0.6 A min., 1.2A max.
Maximum load current	0.25 A continuous, 0.5 A peak
Maximum OFF current	Jumper J6 installed: 200µA; J6 removed: 30µA
Base power required 5V	70mA
OFF to ON response	0.5 ms
ON to OFF response	0.5 ms
Terminal type	Removable (D2-16IOCON)
Status indicators	Logic Side
Weight	2.0 oz. (25g)
Fuses	None
External DC required	24VDC +/-10% @ 50mA
External DC overvoltage shutdown	27V, outputs are restored when voltage is within limits

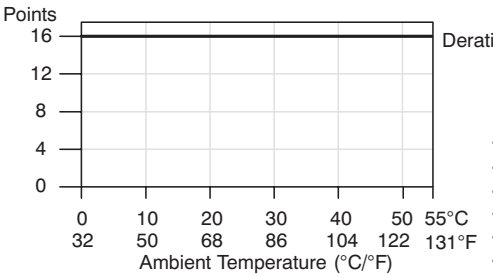

Derating Chart

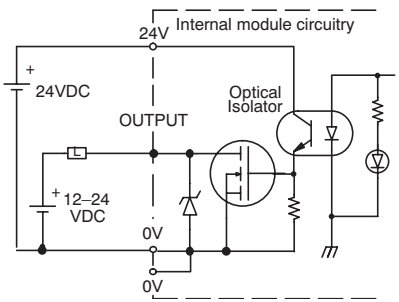

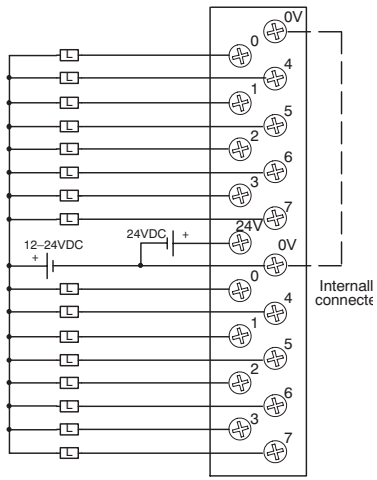

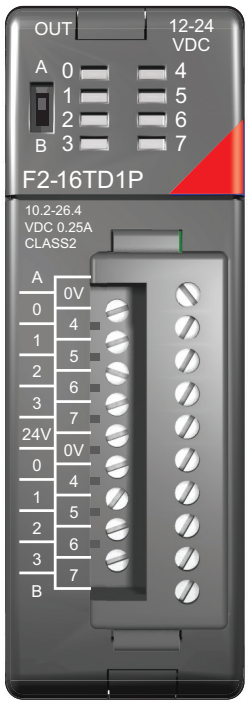

When the A/B switch is in the A position, the LEDs display the output status of the module's first 8 output points. Positon B displays the output status of the module's second group of 8 output points.

F2–16TD1P, DC Output With Fault Protection, continued

This module detects the following fault statuses and turns the related X bit(s) on.

1. Missing external 24VDC for the module
2. Open load
3. Over temperature (the output is shut down)
4. Over load current (the output is shut down)

Fault Status	X bit Fault Status Indication
Missing external 24VDC	All 16 X bits are on.
Open load	Only the X bit assigned to the faulted output is on
Over temperature	
Over load current	

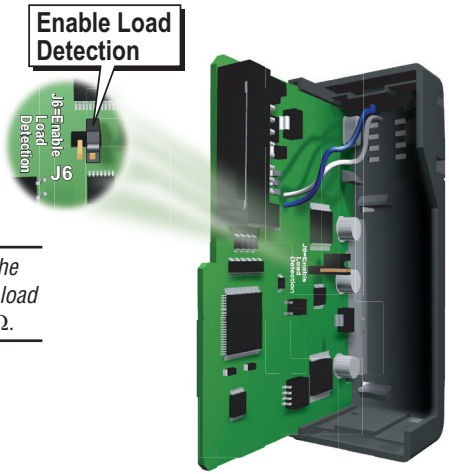

NOTE: *Open load detection can be disabled by removing the jumper switch J6 on the module PC board. Disable if the load might be energized by 200µA, or load resistance is > 56kΩ.*

When this module is installed, 16 X bits are automatically assigned as fault status indicators. Each X bit indicates the fault status of a particular output.

In this example, X8-X23 are assigned as fault status indicators.

X8: Fault status indicator for Y0
X9: Fault status indicator for Y1
↓
X22: Fault status indicator for Y14
X23: Fault status indicator for Y15

Example

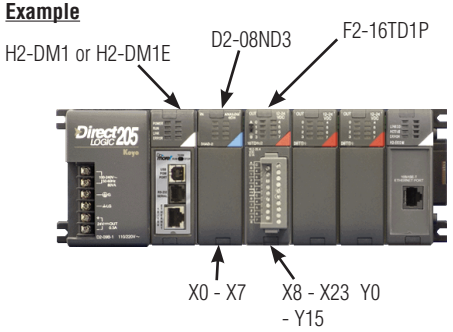

The fault status indicators (X bits) will automatically reset once the fault condition is corrected. Over temperature and over load can be reset by turning the assigned output off or power cycling the PLC.

Fault Status	Operation
Missing external 24VDC	Apply external 24VDC
Open load	Connect the load.
Over temperature	Turn the output (Y bit) off or power cycle the PLC
Over load current	

F2–16TD2P, DC Output with Fault Protection

F2-16TD2P DC Output with Fault Protection	
Inputs per module	16 (status indication)
Outputs per module	16 (current sourcing)
Commons per module	1
Output type	NMOS FET (open source)
Operating voltage	10.2–26.4 VDC, external
Peak voltage	40VDC
AC frequency	N/A
ON voltage drop	0.7 V (output current 0.5 A)
Overcurrent trip	0.6 A min., 1.2 A max.
Maximum load current	0.25 A continuous, 0.5 A peak
Maximum OFF current	Jumper J6 installed: 200µA; J6 removed: 30µA
Base power required 5V	70mA
OFF to ON response	0.5 ms
ON to OFF response	0.5 ms
Terminal type	Removable (D2-16IOCON)
Status indicators	Logic Side
Weight	2.0 oz. (25g)
Fuses	None
External DC required	24VDC ±10% @ 50mA
External DC overvoltage shutdown	27V, outputs are restored when voltage is within limits

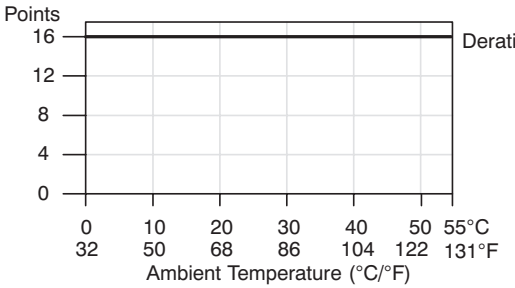

Derating Chart

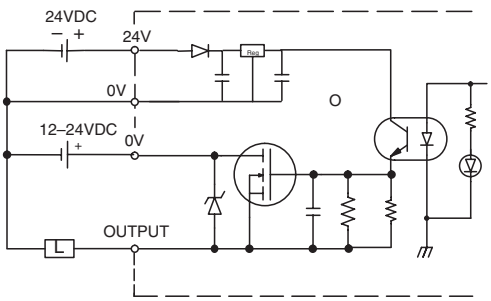

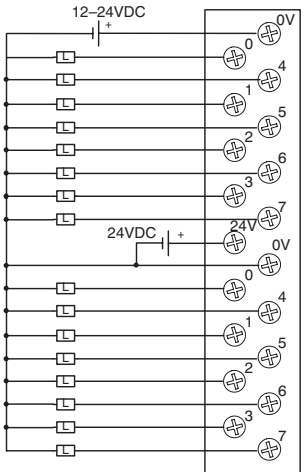

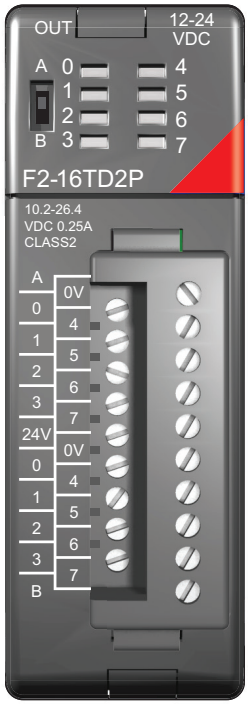

When the A/B switch is in the A position, the LEDs display the output status of the module's first 8 output points. Positon B displays the output status of the module's second group of 8 output points.

F2–16TD2P, DC Output With Fault Protection, continued

This module detects the following fault statuses and turns the related X bit(s) on.

1. Missing external 24VDC for the module
2. Open load
3. Over temperature (the output is shut down)
4. Over load current (the output is shut down)

Fault Status	X bit Fault Status Indication
Missing external 24VDC	All 16 X bits are on.
Open load	Only the X bit assigned to the faulted output is on
Over temperature	
Over load current	

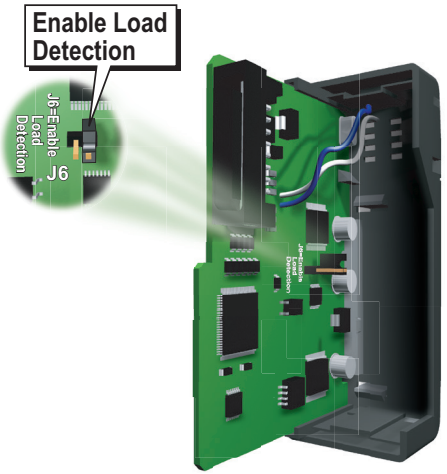

NOTE: *Open load detection can be disabled by removing the jumper switch J6 on the module PC board. Disable if the load might be energized by 200µA, or load resistance is > 56kΩ.*

When this module is installed, 16 X bits are automatically assigned as fault status indicators. Each X bit indicates the fault status of a particular output.

In this example, X8-X23 are assigned as fault status indicators.

X8: Fault status indicator for Y0
X9: Fault status indicator for Y1
↓
X22: Fault status indicator for Y14
X23: Fault status indicator for Y15

Example

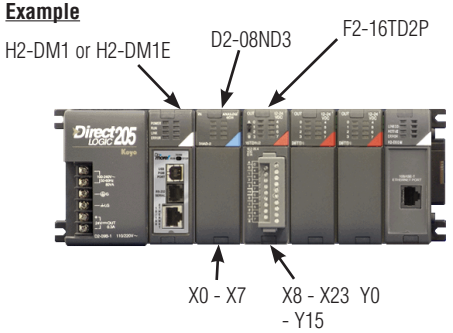

The fault status indicators (X bits) will automatically reset once the fault condition is corrected. Over temperature and over load can be reset by turning the assigned output off or power cycling the PLC.

Fault Status	Operation
Missing external 24VDC	Apply external 24VDC
Open load	Connect the load.
Over temperature	Turn the output (Y bit) off or power cycle the PLC
Over load current	

D2–32TD1, DC Output

D2-32TD1 DC Output	
Outputs per Module	32 (current sinking)
Commons per Module	4 (8 I/O terminal points)
Output Type	NPN open collector
Operating Voltage	12–24 VDC
Peak Voltage	30VDC
ON Voltage Drop	0.5 VDC maximum
Minimum Load Current	0.2 mA
Max Load Current	0.1 A/point; 3.2 A per module
Max Leakage Current	0.1 mA @ 30VDC
Max Inrush Current	150mA for 10ms
Base Power Required 5VDC	350mA
OFF to ON Response	0.5 ms
ON to OFF Response	0.5 ms
Terminal Type (not included)	Removable 40-pin connector[1]
Status Indicator	Module activity (no I/O status indicators)
Weight	2.1 oz. (60g)
Fuses	None
External DC Power Required	20–28 VDC max. 120mA (all points on)
ZIPLink Module	ZL-RTB40 (Feedthrough) ZL-RFU40 (Fuse)
ZIPLink Cable	ZL-D24-CBL40 (0.5 m) ZL-D24-CBL40-1 (1.0 m) ZL-D24-CBL40-2 (2.0 m) ZL-D24-CBL40-1P (1.0 m Pigtail) ZL-D24-CBL40-2P (2.0 m Pigtail)
ZIPLink connector is recommended or purchase custom connector separately.	

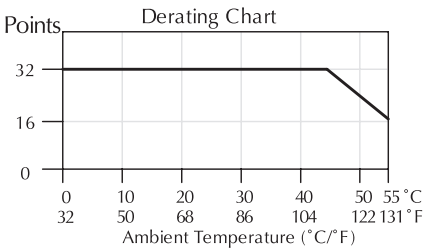

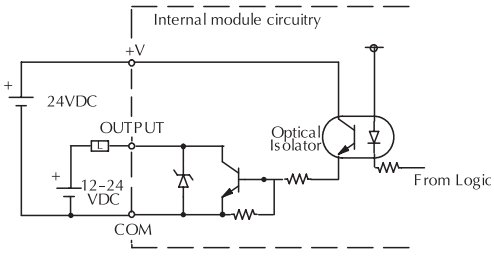

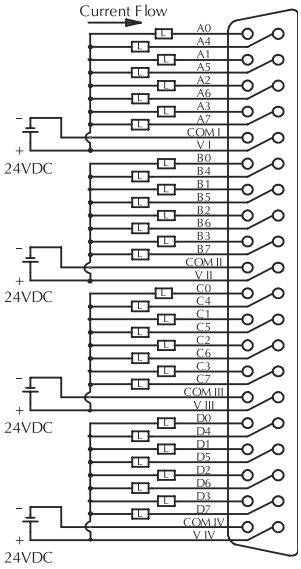

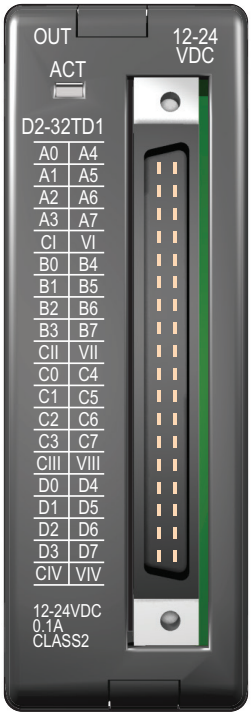

D2–32TD2, DC Output

D2-32TD2 DC Output	
Outputs per Module	32 (current sourcing)
Commons per Module	4 (8 I/O terminal points)
Output Type	Transistor
Operating Voltage	12 to 24 VDC
Peak Voltage	30VDC
ON Voltage Drop	0.5 VDC @ 0.1 A
Minimum Load Current	0.2 mA
Max Load Current	0.1 A/point; 0.8 A/common
Max Leakage Current	0.1 mA @ 30VDC
Max Inrush Current	150mA @ 10ms
Base Power Required 5VDC	350mA
OFF to ON Response	0.5 ms
ON to OFF Response	0.5 ms
Terminal Type (not included)	Removable 40-pin connector[1]
Status Indicator	Module activity (no I/O status indicators)
Weight	2.1 oz (60g)
Fuses	None
ZIPLink Module	ZL-RTB40 (Feedthrough) ZL-RFU40 (Fuse)
ZIPLink Cable	ZL-D24-CBL40 (0.5 m) ZL-D24-CBL40-1 (1.0 m) ZL-D24-CBL40-2 (2.0 m) ZL-D24-CBL40-1P (1.0 m Pigtail) ZL-D24-CBL40-2P (2.0 m Pigtail)
ZIPLink connector is recommended or purchase custom connector separately.	

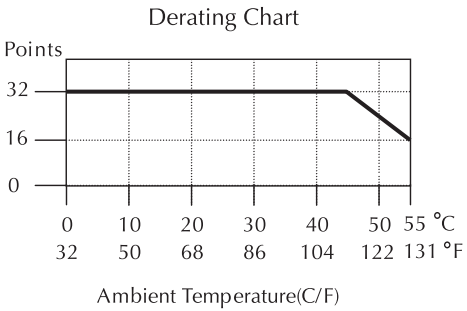

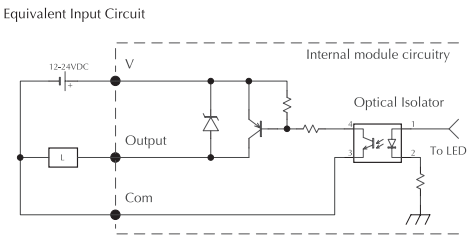

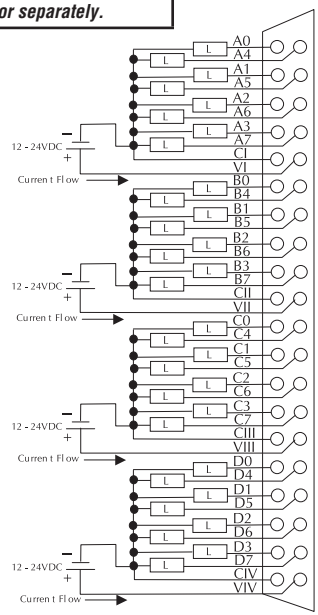

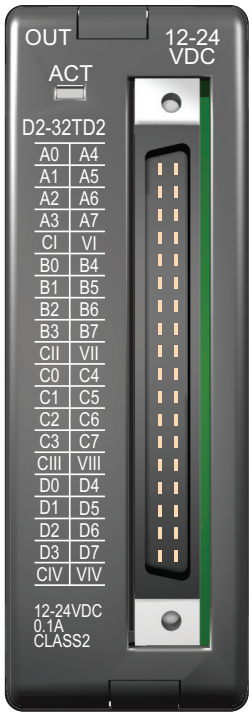

F2–08TA, AC Output

F2-08TA AC Output	
Outputs per Module	8
Commons per Module	2 (Isolated)
Output Type	SSR (Triac with zero crossover)
Operating Voltage	24–140 VAC
Peak Voltage	140VAC
ON Voltage Drop	1.6 V(rms) @ 1.5 A
AC Frequency	47 to 63 Hz
Minimum Load Current	50mA
Max Load Current	1.5 A / pt @ 30°C 1.0 A / pt @ 60°C 4.0 A / common; 8.0 A / module @ 60°C
Max Leakage Current	0.7 mA(rms)
Peak One Cycle Surge Current	15A
Base Power Required 5VDC	250mA
OFF to ON Response	0.5 ms - 1/2 cycle
ON to OFF Response	0.5 ms - 1/2 cycle
Terminal Type (included)	Removable; D2-8IOCON
Status Indicator	Logic side
Weight	3.5 oz.
Fuses	None
ZIPLink Module	ZL-RTB20 (Feedthrough)
ZIPLink Cable	ZL-D2-CBL10 (0.5 m) ZL-D2-CBL10-1 (1.0 m) ZL-D2-CBL10-2 (2.0 m)

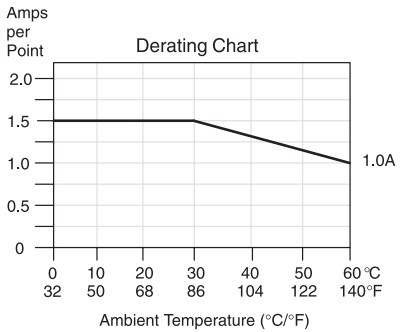

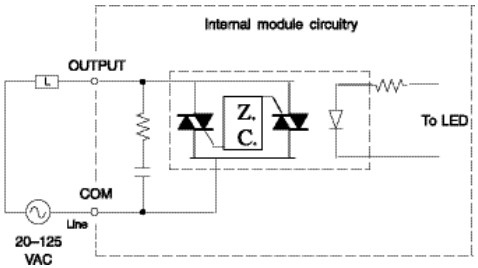

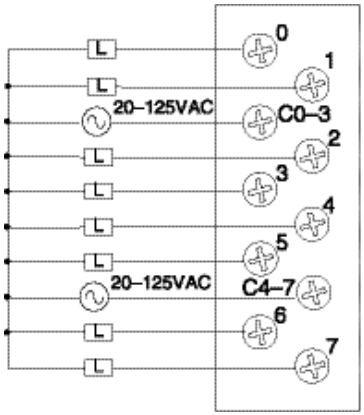

D2–08TA, AC Output

D2-08TA AC Output	
Outputs per Module	8
Commons per Module	1 (2 I/O terminal points)
Output Type	SSR (Triac)
Operating Voltage	15–264 VAC
Peak Voltage	264VAC
ON Voltage Drop	< 1.5 VAC (>0.1 A) < 3.0 VAC (<0.1 A)
AC Frequency	47 to 63 Hz
Minimum Load Current	10mA
Max Load Current	0.5 A/point; 4A/common
Max Leakage Current	4mA (264VAC, 60Hz) 1.2 mA (100VAC, 60Hz) 0.9 mA (100VAC, 50Hz)
Max Inrush Current	10A for 10ms
Base Power Required 5VDC	250mA
OFF to ON Response	1ms
ON to OFF Response	1ms + 1/2 cycle
Terminal Type (included)	Removable; D2-8IOCON
Status Indicator	Logic side
Weight	2.8 oz. (80g)
Fuses	1 per common, 6.3 A slow blow, non-replaceable
ZIPLink Module	ZL-RTB20 (Feedthrough)
ZIPLink Cable	ZL-D2-CBL10 (0.5 m) ZL-D2-CBL10-1 (1.0 m) ZL-D2-CBL10-2 (2.0 m)

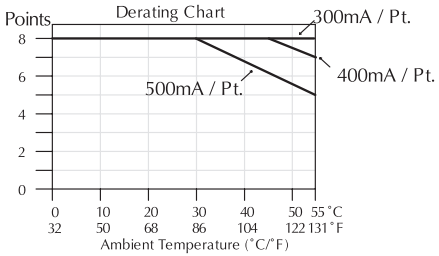

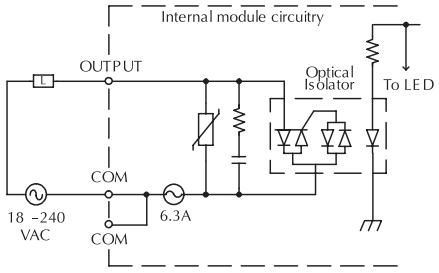

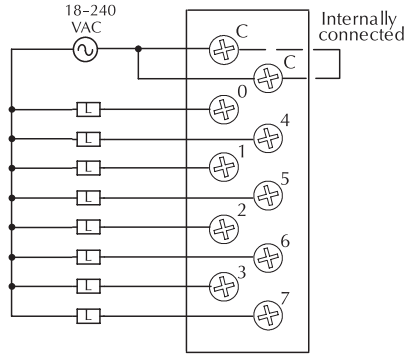

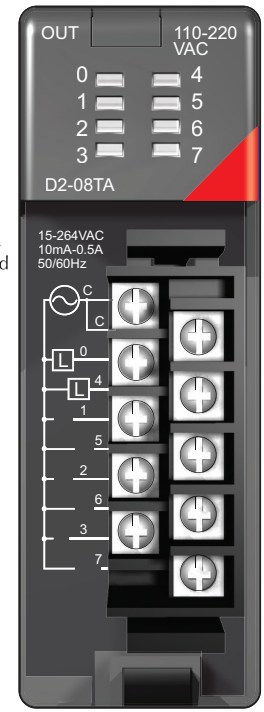

D2–12TA, AC Output

D2-12TA AC Output	
Outputs per Module	12
Outputs Points Consumed	16 (four unused, see chart right)
Commons per Module	2 (isolated)
Output Type	SSR (Triac)
Operating Voltage	15–132 VAC
Peak Voltage	132VAC
ON Voltage Drop	< 1.5 VAC (>50mA) < 4.0 VAC (<50mA)
AC Frequency	47 to 63 Hz
Minimum Load Current	10mA
Max Load Current	0.3 A /point; 1.8 A/common
Max Leakage Current	2mA (132VAC, 60Hz)
Max Inrush Current	10A for 10ms
Base Power Required 5VDC	350mA
OFF to ON Response	1ms
ON to OFF Response	1ms + 1/2 cycle
Terminal Type (included)	Removable; D2-16IOCON
Status Indicator	Logic side
Weight	2.8 oz. (80g)
Fuses	(2) 1 per common 3.15 A slow blow, replaceable Order D2-FUSE-1 (5 per pack)
ZIPLink Module	ZL-RTB20 (Feedthrough) ZL-RFU20 (Fuse)
ZIPLink Cable	ZL-D2-CBL19 (0.5 m) ZL-D2-CBL19-1 (1.0 m) ZL-D2-CBL19-2 (2.0 m) ZL-D2-CBL19-1P (1.0 m Pigtail) ZL-D2-CBL19-2P (2.0 m Pigtail)

Addresses Used

Points	Used?	Points	Used?
Yn+0	Yes	Yn+8	Yes
Yn+1	Yes	Yn+9	Yes
Yn+2	Yes	Yn+10	Yes
Yn+3	Yes	Yn+11	Yes
Yn+4	Yes	Yn+12	Yes
Yn+5	Yes	Yn+13	Yes
Yn+6	No	Yn+14	No
Yn+7	No	Yn+15	No

Yn is the starting address

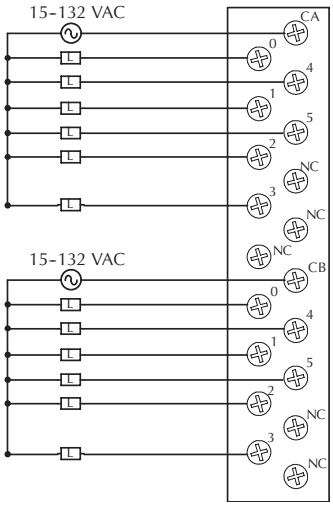

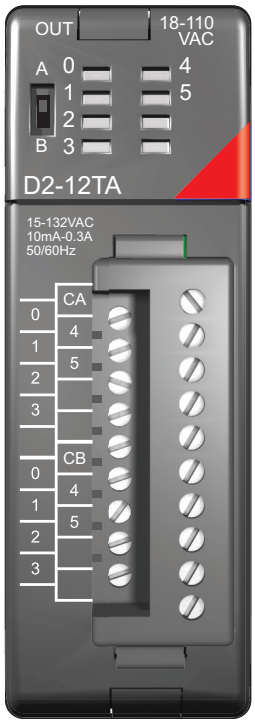

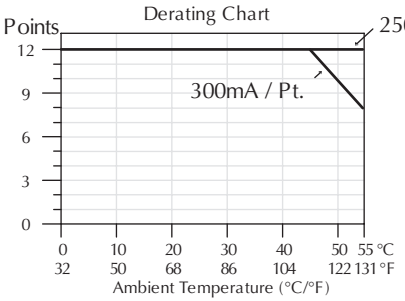

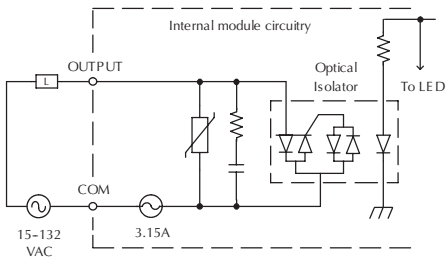

D2–04TRS, Relay Output

D2-04TRS Relay Output	
Outputs per Module	4
Outputs Points Consumed	8 (only 1st 4pts are used)
Commons per Module	4 (isolated)
Output Type	Relay, form A (SPST)
Operating Voltage	5–30 VDC / 5–240 VAC
Peak Voltage	30 VDC, 264 VAC
ON Voltage Drop	0.72 VDC maximum
AC Frequency	47 to 63 Hz
Minimum Load Current	10mA
Max Load Current (resistive)	4A/point; 8A/module (resistive)
Max Leakage Current	0.1 mA @ 264VAC
Max Inrush Current	5A for < 10ms
Base Power Required 5VDC	250 mA
OFF to ON Response	10ms
ON to OFF Response	10ms
Terminal Type (included)	Removable; D2-8IOCON
Status Indicator	Logic side
Weight	2.8 oz. (80g)
Fuses	1 per point 6.3 A slow blow, replaceable Order D2-FUSE-3 (5 per pack)
ZIPLink Module*	ZL-RTB20 (Feedthrough)
ZIPLink Cable*	ZL-D2-CBL10 (0.5 m) ZL-D2-CBL10-1 (1.0 m) ZL-D2-CBL10-2 (2.0 m)
*D2-04TRS outputs are derated not to exceed 2 Amps per point and 2 Amps per common when using the ZIPLink wiring system.	

Typical Relay Life (Operations)				
Voltage & Load Current				
Type of Load	1A	2A	3A	4A
24VDC Resistive	500k	200k	100k	50k
24VDC Solenoid [1]	100k	40k	–	–
110VAC Resistive	500k	250k	150k	100k
110VAC Solenoid [2]	200k	100k	50k	
220VAC Resistive	350k	150k	100k	50k
220VAC Solenoid [3]	100k	50k	–	–

1. *At 24VDC solenoid (inductive)* loads over 2A cannot be used.
2. *At 100VAC solenoid (inductive)* loads over 3A cannot be used.
3. *At 220VAC solenoid (inductive)* loads over 2A cannot be used.

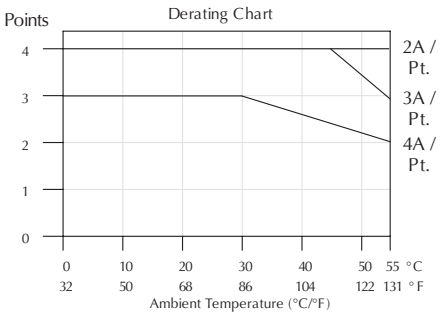

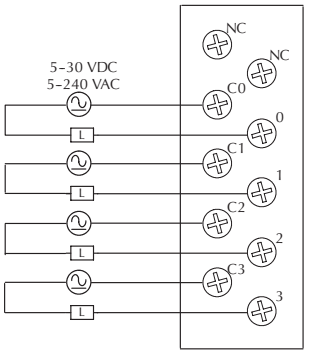

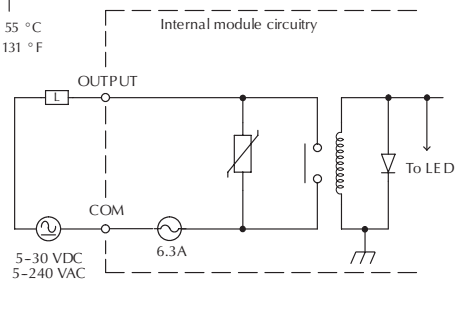

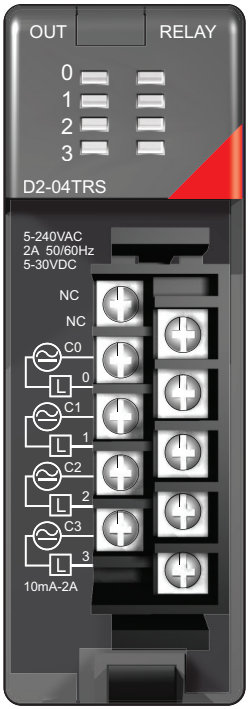

D2–08TR, Relay Output

D2-08TR Relay Output	
Outputs per Module	8
Outputs Points Consumed	8
Commons per Module	1 (2 I/O terminals)
Output Type	Relay, form A (SPST)
Operating Voltage	5–30 VDC; 5–240 VAC
Peak Voltage	30VDC, 264VAC
ON Voltage Drop	N/A
AC Frequency	47 to 60 Hz
Minimum Load Current	5mA @ 5VDC
Max Load Current (resistive)	1A/point; 4A/common
Max Leakage Current	0.1 mA @265VAC
Max Inrush Current	Output: 3A for 10ms Common: 10A for 10ms
Base Power Required 5VDC	250mA
OFF to ON Response	12ms
ON to OFF Response	10ms
Terminal Type (included)	Removable; D2-8IOCON
Status Indicator	Logic side
Weight	3.9 oz. (110g)
Fuses	One 6.3 A slow blow, replaceable Order D2-FUSE-3 (5 per pack)
ZIPLink Module	ZL-RTB20 (Feedthrough)
ZIPLink Cable	ZL-D2-CBL10 (0.5 m) ZL-D2-CBL10-1 (1.0 m) ZL-D2-CBL10-2 (2.0 m)

Typical Relay Life (Operations)		
Voltage/Load	Current	Closures
24VDC Resistive	1A	500k
24VDC Solenoid		100k
110VAC Resistive		500k
110VAC Solenoid		200k
220VAC Resistive		350k
220VAC Solenoid		100k

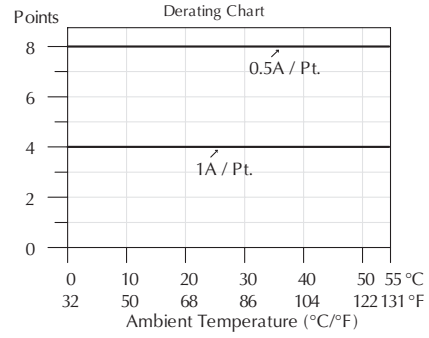

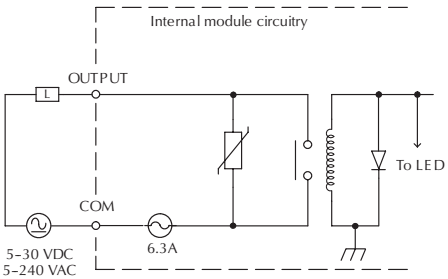

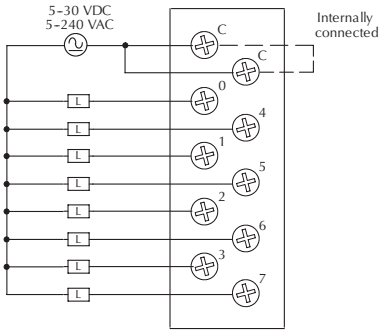

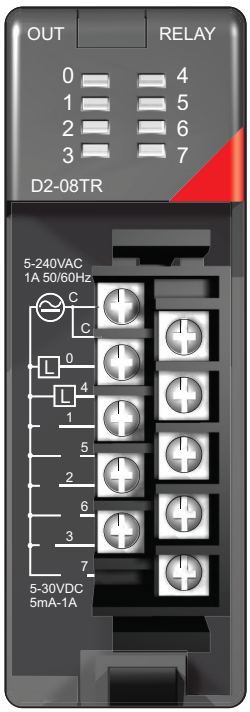

F2–08TR, Relay Output

F2-08TR Relay Output	
Outputs per Module	8
Outputs Points Consumed	8
Commons per Module	2 (isolated), 4-pts per common
Output Type	8, Form A (SPST normally open)
Operating Voltage	7A @ 12–28 VDC, 12–250 VAC; 0.5 A @ 120VDC
Peak Voltage	150VDC, 265VAC
ON Voltage Drop	N/A
AC Frequency	47 to 63 Hz
Minimum Load Current	10mA @ 12VDC
Max Load Current (resistive)	10A/point [3] (Subject to derating) Max of 10A/common
Max Leakage Current	N/A
Max Inrush Current	12A
Base Power Required 5VDC	670mA
OFF to ON Response	15ms (typical)
ON to OFF Response	5ms (typical)
Terminal Type (included)	Removable; D2-8IOCON
Status Indicator	Logic side
Weight	5.5 oz. (156g)
Fuses	None
ZIPLink Module*	ZL-RTB20 (Feedthrough)
ZIPLink Cable*	ZL-D2-CBL10 (0.5 m) ZL-D2-CBL10-1 (1.0 m) ZL-D2-CBL10-2 (2.0 m)
****F2-08TR outputs are derated not to exceed 2 Amps per point and 4 Amps per common when using the ZIPLink wiring system.***	

Typical Relay Life[1] (Operations) at Room Temperature

Voltage & Type of Load [2]	*Load Current*		
	50mA	**5A**	**7A**
24VDC Resistive	10M	600k	300k
24VDC Solenoid	–	150k	75k
110VDC Resistive	–	600k	300k
110VDC Solenoid	–	500k	200k
220VAC Resistive	–	300k	150k
220VAC Solenoid	–	250k	100k

1. Contact life may be extended beyond those values shown with the use of arc suppression techniques described in the DL205 User Manual. Since these modules have no leakage current, they do not have built-in snubber. For example, if you place a diode across a 24VDC inductive load, you can significantly increase the life of the relay
2. At 120VDC 0.5 A resistive load, contact life cycle is 200k cycles.
3. Normally closed contacts have 1/2 the current handling capability of the normally open contacts.

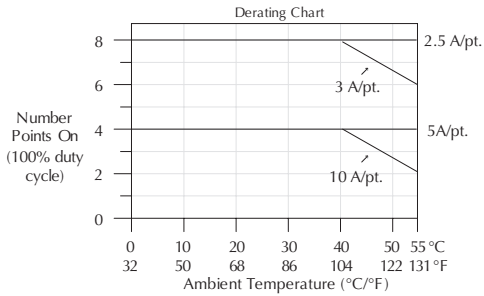

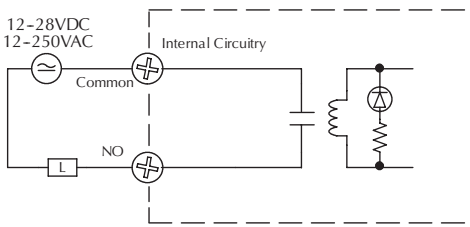

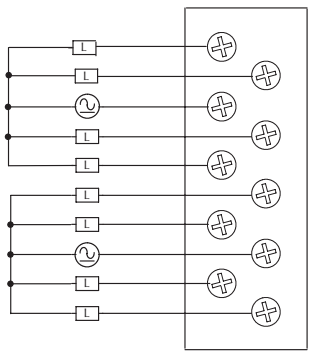

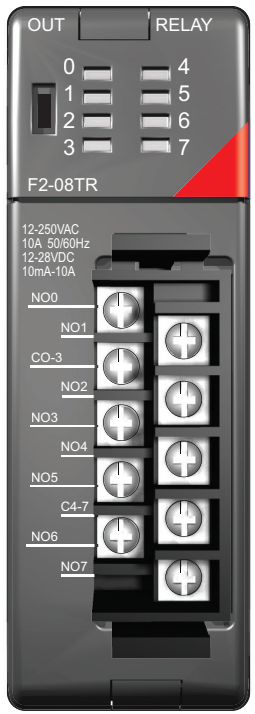

F2–08TRS, Relay Output

F2-08TRS Relay Output	
Outputs per Module	8
Outputs Points Consumed	8
Commons per Module	8 (isolated)
Output Type	3, Form C (SPDT) 5, Form A (SPST normally open)
Operating Voltage	7A @ 12–28 VDC, 12–250 VAC 0.5 A @ 120VDC
Peak Voltage	150VDC, 265VAC
ON Voltage Drop	N/A
AC Frequency	47 to 63Hz
Minimum Load Current	10mA @ 12VDC
Max Load Current (resistive)	7A/point [3] (subject to derating)
Max Leakage Current	N/A
Max Inrush Current	12A
Base Power Required 5VDC	670mA
OFF to ON Response	15ms (typical)
ON to OFF Response	5ms (typical)
Terminal Type (included)	Removable; D2-16IOCON
Status Indicator	Logic side
Weight	5.5 oz. (156g)
Fuses	None
ZIPLink Module*	ZL-RTB20 (Feedthrough)
ZIPLink Cable*	ZL-D2-CBL19 (0.5 m) ZL-D2-CBL19-1 (1.0 m) ZL-D2-CBL19-2 (2.0 m) ZL-D2-CBL19-1P (1.0 m Pigtail) ZL-D2-CBL19-2P (2.0 m Pigtail)

**F2-08TRS outputs are derated not to exceed 2 Amps per point and 2 Amps per common when using the ZIPLink wiring system.*

Typical Relay Life[1] (Operations) at Room Temperature			
Voltage & Type of Load [2]	Load Current		
	50mA	5A	7A
24VDC Resistive	10M	600k	300k
24VDC Solenoid	–	150k	75k
110VDC Resistive	–	600k	300k
110VDC Solenoid	–	500k	200k
220VAC Resistive	–	300k	150k
220VAC Solenoid	–	250k	100k

1. Contact life may be extended beyond those values shown with the use of arc suppression techniques described in the DL205 User Manual. Since these modules have no leakage current, they do not have built-in snubber. For example, if you place a diode across a 24VDC inductive load, you can significantly increase the life of the relay
2. At 120VDC 0.5 A resistive load, contact life cycle is 200k cycles.
3. Normally closed contacts have 1/2 the current handling capability of the normally open contacts.

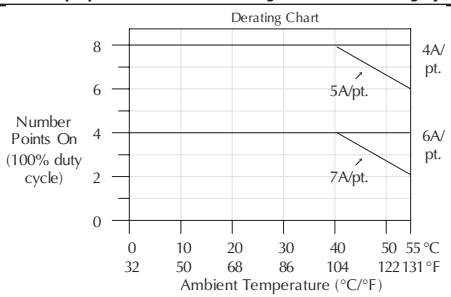

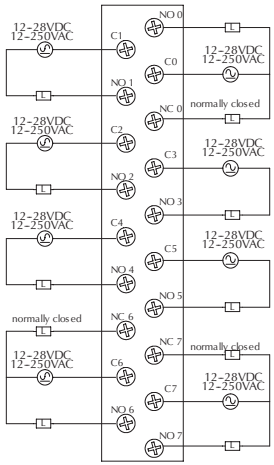

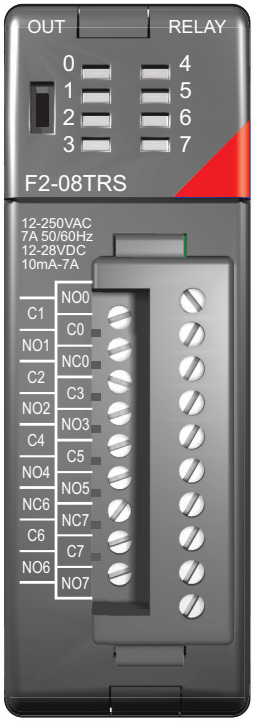

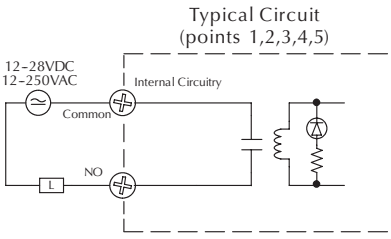

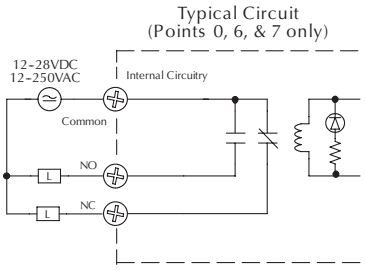

D2–12TR, Relay Output

D2-12TR Relay Output	
Outputs per Module	12
Outputs Points Consumed	16 (four unused, see chart below)
Commons per Module	2 (6-pts. per common)
Output Type	Relay, form A (SPST)
Operating Voltage	5–30 VDC; 5–240 VAC
Peak Voltage	30VDC; 264VAC
ON Voltage Drop	N/A
AC Frequency	47 to 60 Hz
Minimum Load Current	5mA @ 5VDC
Max Load Current (resistive)	1.5 A/point; Max of 3A/common
Max Leakage Current	0.1 mA @ 265VAC
Max Inrush Current	Output: 3A for 10ms Common: 10A for 10ms
Base Power Required 5VDC	450mA
OFF to ON Response	10ms
ON to OFF Response	10ms
Terminal Type (included)	Removable; D2-16IOCON
Status Indicator	Logic side
Weight	4.6 oz. (130g)
Fuses	(2) 4A slow blow, replaceable Order D2-FUSE-4 (5 per pack)
ZIPLink Module	ZL-RTB20 (Feedthrough) ZL-RFU20 (Fuse)
ZIPLink Cable	ZL-D2-CBL19 (0.5 m) ZL-D2-CBL19-1 (1.0 m) ZL-D2-CBL19-2 (2.0 m) ZL-D2-CBL19-1P (1.0 m Pigtail) ZL-D2-CBL19-2P (2.0 m Pigtail)

Typical Relay Life (Operations)		
Voltage/Load	Current	Closures
24VDC Resistive	1A	500k
24VDC Solenoid		100k
110VAC Resistive		500k
110VAC Solenoid		200k
220VAC Resistive		350k
220VAC Solenoid		100k

Addresses Used			
Points	Used?	Points	Used?
Yn+0	Yes	Yn+8	Yes
Yn+1	Yes	Yn+9	Yes
Yn+2	Yes	Yn+10	Yes
Yn+3	Yes	Yn+11	Yes
Yn+4	Yes	Yn+12	Yes
Yn+5	Yes	Yn+13	Yes
Yn+6	No	Yn+14	No
Yn+7	No	Yn+15	No
Yn is the starting address			

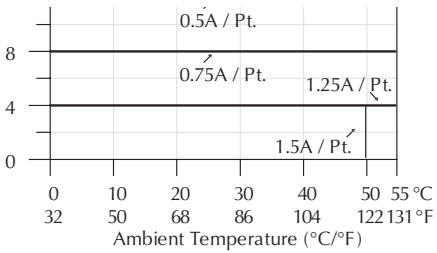

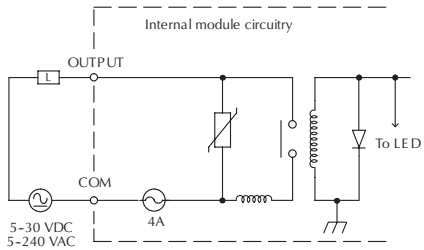

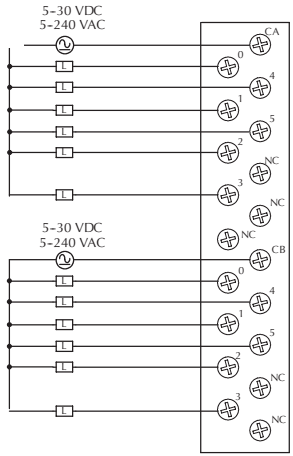

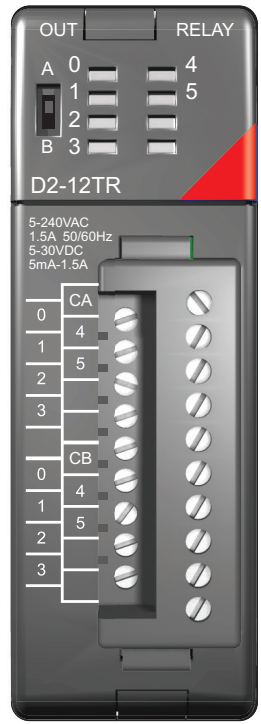

D2–08CDR, 4 pt. DC Input / 4pt. Relay Output

D2-08CDR 4-pt. DC In / 4pt. Relay Out	
General Specifications	
Base Power Required 5VDC	200mA
Terminal Type (included)	Removable; D2-8IOCON
Status Indicator	Logic side
Weight	3.5 oz. (100g)
Input Specifications	
Inputs per Module	4 (sink/source)
Input Points Consumed	8 (only first 4-pts are used)
Commons per Module	1
Input Voltage Range	20–28 VDC
Peak Voltage	30VDC
ON Voltage Level	19VDC minimum
OFF Voltage Level	7VDC maximum
AC Frequency	N/A
Input Impedance	4.7 kΩ
Input Current	5mA @ 24VDC
Maximum Current	8mA @ 30VDC
Minimum ON Current	4.5 mA
Maximum OFF Current	1.5 mA
OFF to ON Response	1 to 10 ms
ON to OFF Response	1 to 10 ms
Fuses (input circuits)	None
Output Specifications	
Outputs per Module	4
Outputs Points Consumed	8 (only first 4-pts are used)
Commons per Module	1

Output Type	Relay, form A (SPST)
Operating Voltage	5–30 VDC; 5–240 VAC
Peak Voltage	30VDC; 264VAC
ON Voltage Drop	N/A
AC Frequency	47 to 63 Hz
Minimum Load Current	5mA @ 5VDC
Max Load Current (resistive)	1A/point ; 4A/module
Max Leakage Current	0.1 mA @ 264VAC
Max Inrush Current	3A for < 100 ms, 10A for < 10ms (common)
OFF to ON Response	12ms
ON to OFF Response	10ms
Fuses (output circuits)	1 (6.3 A slow blow, replaceable); Order D2-FUSE-3 (5 per pack)
ZIPLink Module	ZL-RTB20 (Feedthrough)
ZIPLink Cable	ZL-D2-CBL10 (0.5 m) ZL-D2-CBL10-1 (1.0 m) ZL-D2-CBL10-2 (2.0 m)

Typical Relay Life (Operations)		
Voltage/Load	**Current**	**Closures**
24VDC Resistive	1A	500k
24VDC Solenoid		100k
110VAC Resistive		500k
110VAC Solenoid		200k
220VAC Resistive		350k
220VAC Solenoid		100k

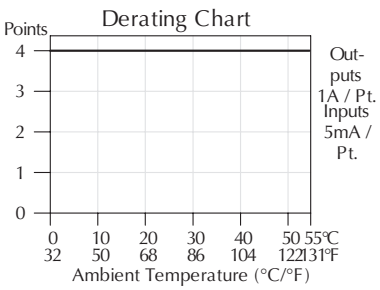

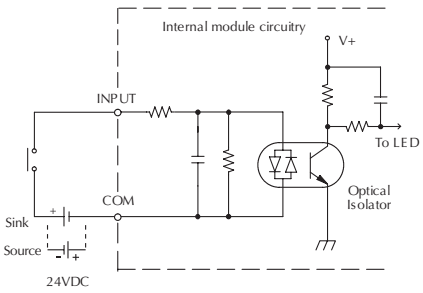

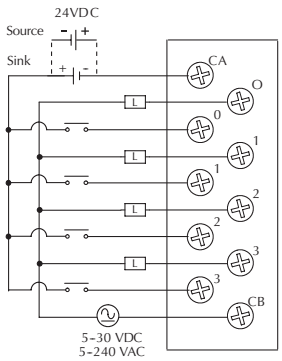

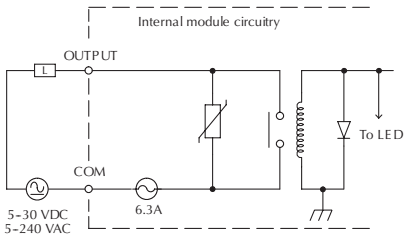

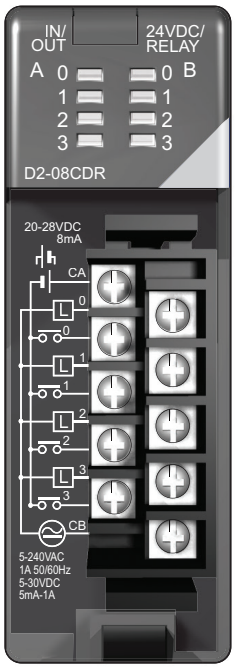

Notes:

Specifications: Analog I/O Modules

In This Chapter...

Analog I/O Modules Overview 6–2
Analog Input Modules 6–2
Analog Output Modules 6–3
Analog Input/Output Module 6–3
How to Access the Analog I/O Modules 6–4
F2-04AD-1(L) Analog Input 6–6
Setting the Module Jumpers 6–7
F2-04AD-1(L) Addressing 6–8
F2-04AD-2(L), Analog Input 6–9
Setting the Module Jumpers 6–10
F2-04AD-2(L) Addressing 6–11
F2-08AD-1, Analog Input 6–12
Setting the Module Jumpers 6–13
F2-08AD-1 Addressing 6–14
F2-08AD-2, Analog Input 6–15
Setting the Module Jumpers 6–16
F2-08AD-2 Addressing 6–17
F2-04RTD 6–18
Setting the Module Jumpers 6–19
F2-04RTD Addressing 6–21
F2-04THM 6–22
Setting the Module Jumpers 6–24
F2-02DA-1(L), Analog Output 6–28

F2-02DA-2(L), Analog Output 6–30
Unipolar Ranges 6–33
Bipolar Ranges 6–33
F2-02DAS-1, Analog Output 6–34
F2-02DAS-2, Analog Output 6–36
Setting the Module Jumpers 6–37
F2–08DA–1, Analog Output 6–39
F2-08DA-2, Analog Output 6–41
Setting the Module Jumpers 6–42
F2–4AD2DA, Analog Input/Output 6–44
Input 6–46
Output 6–46
F2-8AD4DA-1 Analog Input/Output 6–47
Input 6–50
Output 6–50
Input Configuration Using Do-more Designer Version 1.1 or Newer 6–51
Input Resolution Selection (WYn+4) 6–52
Input Track and Hold Selection (WYn+6) 6–53
F2-8AD4DA-2 Analog Input/Output 6–54
Input Configuration Using Do-more Designer Version 1.1 or Newer 6–58
Input Resolution Selection (WYn+4) 6–59
Input and Output Range Selection (WYn+5) 6–60
Input Track and Hold Selection (WYn+6) 6–61

Analog I/O Modules Overview

There are 19 analog I/O modules that can be used in local and remote I/O bases. The specifications and wiring diagrams for these modules are found in this chapter. Each analog I/O module is identified as an "Input", "Output", or "Input/Output" module using the color coding scheme shown below. A blue bar on the front panel signifies an Input I/O module, a red bar signifies an Output I/O module and a white bar signifies a combination Input/Output module.

Analog Input Modules

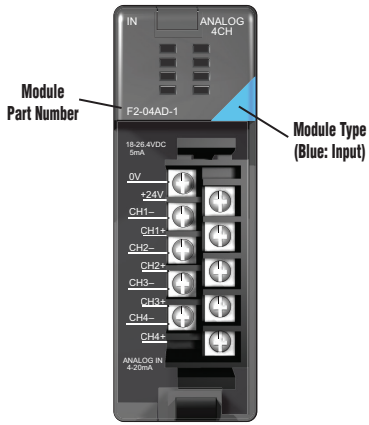

Analog Input Modules			
Part Number	**Number of Channels**	**Description**	**See Page**
F2-04AD-1	4	Analog Current Input	6-6
F2-04AD-2	4	Analog Voltage Input	6-9
F2-08AD-1	8	Analog Current Input	6-12
F2-08AD-2	8	Analog Voltage Input	6-15
F2-04RTD	4	RTD	6-18
F2-04THM	4	Thermocouple	6-22

Analog I/O Modules Overview - continued

Analog Output Modules

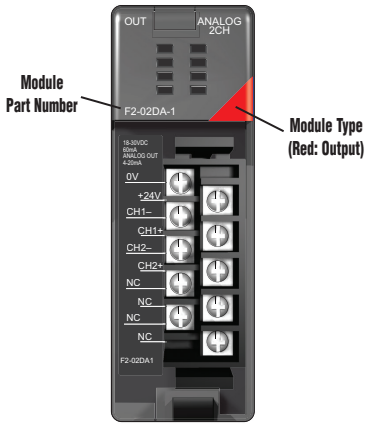

Analog Output Modules			
Part Number	**Number of Channels**	**Description**	**See Page**
F2-02DA-1(L)	2	Analog Current Output	6-28
F2-02DA-2(L)	2	Analog Voltage Output	6-30
F2-02DAS-1	2	Isolated Analog Current Output	6-34
F2-02DAS-2	2	Isolated Analog Voltage Output	6-36
F2-08DA-1	8	Analog Current Output	6-39
F2-08DA-2	8	Analog Voltage Output	6-41

Analog Input/Output Module

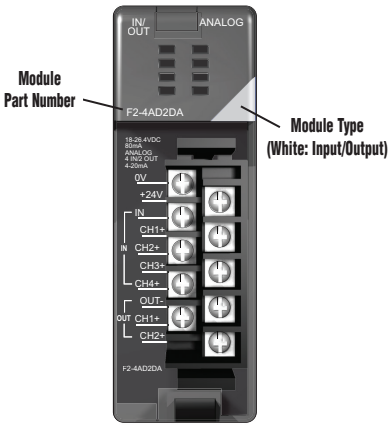

Analog Input/Output Modules				
Part Number	**Number of Input Channels**	**Number of Output Channels**	**Description**	**See Page**
F2-4AD2DA	4	2	Analog Current Input/Output	6-44
F2-8AD4DA-1	8	4	Analog Current Input/Output	6-47
F2-8AD4DA-2	8	4	Analog Voltage Input/Output	6-54

Analog I/O Modules Overview- continued

How to Access the Analog I/O Modules

With the Do-more PLC, the WX and WY memory addresses are assigned to exchange analog data with the analog I/O modules. (WX = Analog input data, WY = Analog output data and setup data) X addresses are also assigned to some analog I/O modules to indicate the status of those analog I/O modules.

The following table shows how many X, WX and WY addresses are assigned to each analog I/O module type.

Analog Input/Output Module Addressing				
Part Number	**Module ID**	**X**	**WX**	**WY**
F2-04AD-1	0x3E	8	4	-
F2-04AD-2	0x3E	8	4	-
F2-08AD-1	0x3B	8	8	-
F2-08AD-2	0x3B	8	8	-
F2-04RTD	0x3C	8	4	-
F2-04THM	0x3C	8	4	-
F2-02DA-1(L)	0x3F	-	-	2
F2-02DA-2(L)	0x3F	-	-	2
F2-02DAS-1	0x4E	-	-	2
F2-02DAS-2	0x4E	-	-	2
F2-08DA-1	0x4F	-	-	8
F2-08DA-2	0x4F	-	-	8
F2-4AD2DA	0x3D	8	4	2
F2-8AD4DA-1	0x37	8	8	7
F2-8AD4DA-2	0x37	8	8	7

Analog I/O Modules Overview- continued

You can check which X, WX and WY addresses are assigned to each analog I/O module in the I/O Mapping tab of the System Configuration window, as shown below.

Select the pull-down menu PLC > System Configuration to open the System Configuration window and click the I/O Mapping tab.

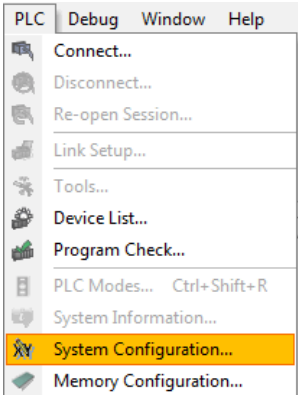

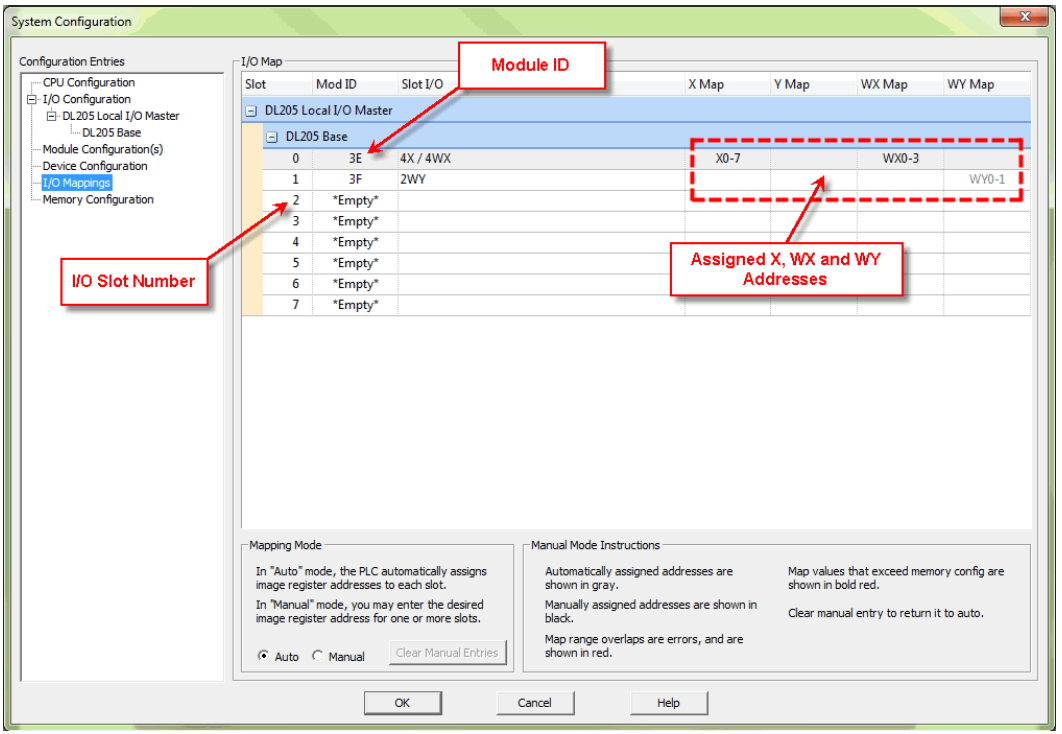

F2-04AD-1(L) Analog Input

F2-04AD-1(L) 4-Channel Analog Current In	
Number of Channels	4, single ended (1 common)
Input Ranges	4–20mA current
Resolution	12-bit (1 in 4096)
Active Low-pass Filtering	-3dB at 120Hz, 2 poles (-12dB per octave)
Input Impedance	250Ω ±0.1%, 1/2W current input
Absolute Maximum Ratings	-40mA to +40mA, current input
Converter Type	Successive approximation
Conversion Time (PLC Update Rate)	4 channels per scan maximum
Linearity Error (End to End)	±1 count (0.025% of full scale) maximum
Input Stability	±1 count
Full Scale Calibration Error (not incl. offset error)	±12 counts max., @ 20mA current input
Offset Calibration Error	±7 counts max.,@ 4mA current input
Step Response	F2-04AD-1: 4.9 ms to 95% of F.S. change F2-04AD-1L: 4ms to 95% of F.S. change
Maximum Inaccuracy	±0.5% @ 77ºF (25ºC) ±0.65% 32º to 140ºF (0º to 60ºC)
Accuracy vs Temperature	±50ppm /ºC maximum full scale (Including max. offset change)

Recommended Fuse	0.032 A, Series 217 fast-acting, current inputs
Base Power Required 5 VDC	F2-04AD-1: 100mA F2-04AD-1L: 50mA
External Power Supply	F2-04AD-1: 5 mA maximum, +10 to +30VDC F2-04AD-1L: 90mA maximum, +10 to +15VDC
Operating Temperature	32º to 140ºF (0º to 60ºC)
Storage Temperature	-4º to 158°F (-20º to 70ºC)
Relative Humidity	5 to 95% (non-condensing)
Environmental Air	No corrosive gases permitted
Vibration	MIL STD 810C 514.2
Shock	MIL STD 810C 516.2
Noise Immunity	NEMA ICS3-304
Terminal Type (included)	Removable; D2-8IOCON
ZIPLink Module	ZL-RTB20 (Feedthrough)
ZIPLink Cable	ZL-D2-CBL10 (0.5 m) ZL-D2-CBL10-1 (1.0 m) ZL-D2-CBL10-2 (2.0 m)

One count in the specification table is equal to one least significant bit of the analog data value (1 in 4096).

Note 1: Shields should be grounded at the signal source.

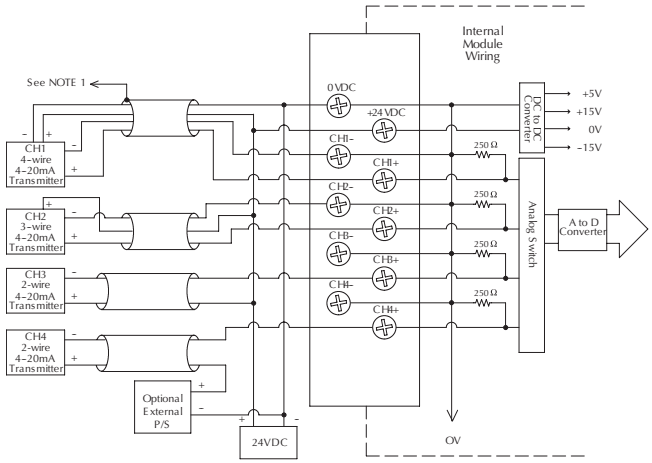

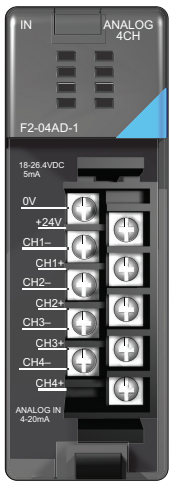

More than one external power supply can be used provided all the power supply commons are connected. A Series 217, 0.032A, fast-acting fuse is recommended for 4–20 mA current loops. If the power supply common of an external power supply is not connected to 0 VDC on the module, then the output of the external transmitter must be isolated. To avoid "ground loop" errors, recommended 4–20 mA transmitter types are: 2 or 3 wire - Isolation between input signal and power supply or 4 wire - Isolation between input signal, power supply, and 4–20 mA output.

F2-04AD-1(L), Analog Input - continued

Setting the Module Jumpers

There are two channel selection jumpers, labeled +1 and +2, that are used to select the number of channels that will be used. See the figure below to find the jumpers on your module. The module is set from the factory for four channel operation. Any unused channels are not processed, so if you only select channels 1 thru 3, channel 4 will not be active. The following table shows how to use the jumpers to select the number of channels. Unused jumpers can be stored on a single post to prevent losing them.

Yes = Jumper Installed No = Jumper Removed

F2-04AD-1(L) Module Jumper Table			
Number of Channels	**Active Channels**	**+1**	**+2**
One	Channel 1	No	No
Two	Channels 1 and 2	Yes	No
Three	Channels 1, 2 and 3	No	Yes
Four	Channels 1, 2, 3 and 4	Yes	Yes

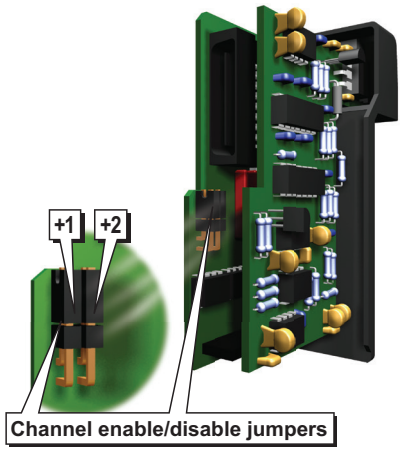

Jumper Location on Modules Having Date Code 0609F3 and Previous

(Two Circuit Board Design)

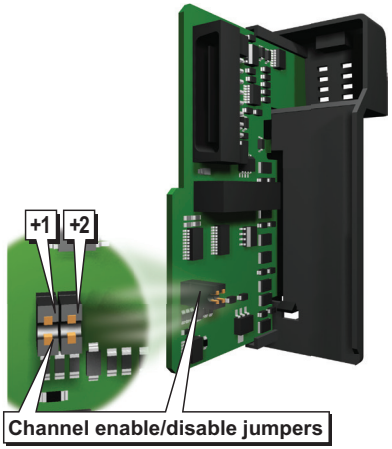

Jumper Location on Modules Having Date Code 0709G and Above

(Single Circuit Board Design)

F2-04AD-1(L), Analog Input - continued

F2-04AD-1(L) Addressing

The Do-more CPU module assigns the following memory addresses to this module.

F2-04AD-1(L) X Addressing	
Address	**Description**
Xn	On when the external 24VDC input power is missing or terminal block is removed.
Xn+1	On when the external 24VDC input power is missing or terminal block is removed. (This address stays off if Channel 2 input is not used)
Xn+2	On when the external 24VDC input power is missing or terminal block is removed. (This address stays off if Channel 3 input is not used)
Xn+3	On when the external 24VDC input power is missing or terminal block is removed. (This address stays off if Channel 4 input is not used)
Xn+4	Not used
Xn+5	Not used
Xn+6	Not used
Xn+7	Not used

Xn: Starting X address assigned to this module

F2-04AD-1(L) WX Addressing	
Address	**Description**
WXn	Channel 1 Input Data (0 to 4095)
WXn+1	Channel 2 Input Data (0 to 4095)
WXn+2	Channel 3 Input Data (0 to 4095)
WXn+3	Channel 4 Input Data (0 to 4095)

WXn: Starting WX address assigned to this module

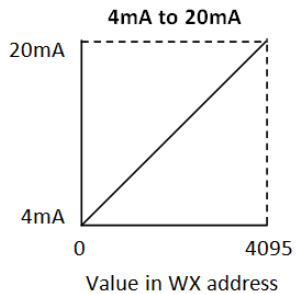

F2-04AD-2(L), Analog Input

F2-04AD-2(L) 4-Channel Analog Voltage In	
Number of Channels	4, single ended (1 common)
Input Ranges	0 to 5 V, 0 to 10 V, ±5V, ±10VDC
Resolution	12 bit (1 in 4096) uni-polar 13 bit (1 in 8191) bi-polar
Active Low-pass Filtering	-3 dB at 80 Hz, 2 poles (-12 dB per octave)
Input Impedance	>20MΩ
Absolute Maximum Ratings	-75 to +75 VDC
Converter Type	Successive approximation
Conversion Time (PLC Update Rate)	4 channels per scan maximum
Linearity Error (End to End)	±1 count (0.025% of full scale) maximum ±2 counts maximum (bi-polar)
Input Stability	±1 count
Full Scale Calibration Error (not incl. offset error)	±3 counts maximum
Offset Calibration Error	±1 count maximum (0V input)
Step Response	F2-04AD-2: 8.2 ms to 95% of F.S change F2-04AD-2L: 10ms to 95% of F.S change

Maximum Inaccuracy	±0.1% @ 77ºF (25ºC) ±0.3% 32º to 140ºF (0º to 60ºC)
Accuracy vs. Temperature	±50ppm/ ºC full scale calibration change (Including maximum offset change)
Base Power Required 5VDC	F2-04AD-2: 110mA F2-04AD-2L: 60mA
External Power Supply	F2-04AD-2: 5mA maximum, +10 to +30 VDC F2-04AD-2L: 90mA maximum, +10 to +15 VDC
Operating Temperature	32º to 140ºF (0 to 60ºC)
Storage Temperature	-4º to 158°F (-20º to 70ºC)
Relative Humidity	5 to 95% (Non-condensing)
Environmental Air	No corrosive gases permitted
Vibration	MIL STD 810C 514.2
Shock	MIL STD 810C 516.2
Noise Immunity	NEMA ICS3-304
Terminal Type (included)	Removable; D2-8IOCON
ZIPLink Module	ZL-RTB20 (Feedthrough)
ZIPLink Cable	ZL-D2-CBL10 (0.5 m) ZL-D2-CBL10-1 (1.0 m) ZL-D2-CBL10-2 (2.0 m)

One count in the specification table is equal to one least significant bit of the analog data value (1 in 4096).

Note 1: Shields should be grounded at the signal source.

Note 2: Unused inputs should be jumpered together (i.e. CH4- to CH4+).

Note 3: More than one external power supply can be used provided the commons are connected together.

Note 4: F2-04AD-2L requires 10–15 VDC input supply.

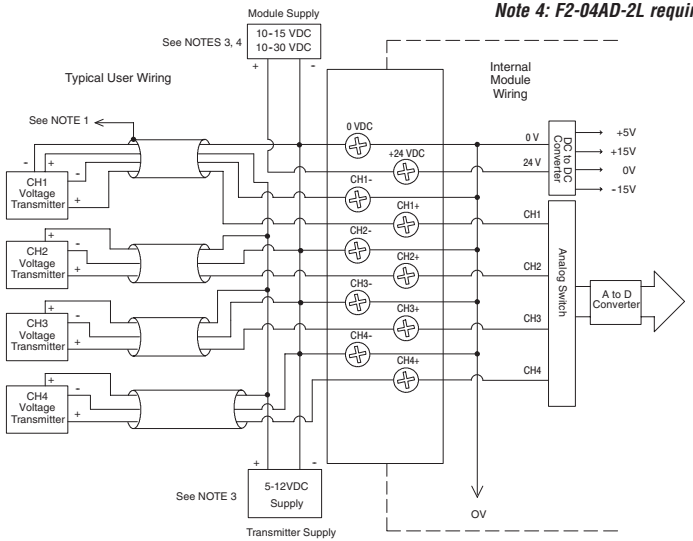

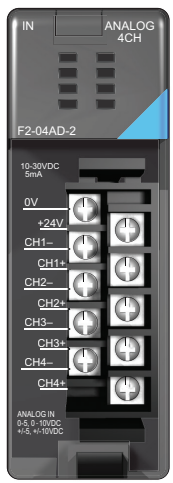

F2-04AD-2(L), Analog Input - continued

Setting the Module Jumpers

There are two channel selection jumpers, labeled +1 and +2, that are used to select the number of channels that will be used. See the figure below to find the jumpers on your module. The module is set from the factory for four channel operation. Any unused channels are not processed, so if you only select channels 1 thru 3, channel 4 will not be active. The following table shows how to use the jumpers to select the number of channels. Unused jumpers can be stored on a single post to prevent losing them.

Yes = Jumper Installed No = Jumper Removed

F2-04AD-2(L) Module Jumper Table			
Number of Channels	**Active Channels**	**+1**	**+2**
One	Channel 1	No	No
Two	Channels 1 and 2	Yes	No
Three	Channels 1, 2 and 3	No	Yes
Four	Channels 1, 2, 3 and 4	Yes	Yes

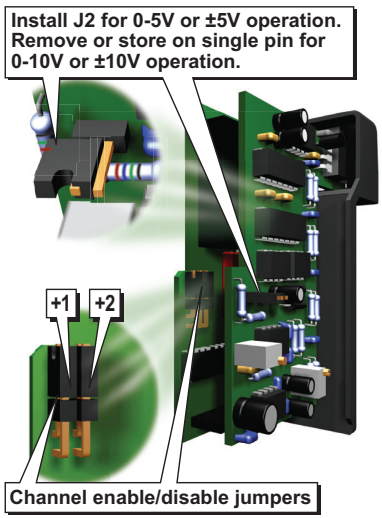

Jumper Location on Modules Having Date Code 0609F3 and Previous

(Two Circuit Board Design)

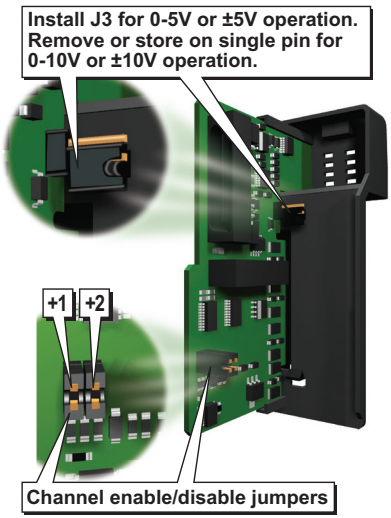

Jumper Location on Modules Having Date Code 0709G and Above

(Single Circuit Board Design)

As seen above, there is also one input signal range jumper, labeled J2 or J3, that is used to select between the 5V and 10V signal ranges. The module is set from the factory for 10V operation (jumper not installed).

F2-04AD-2(L), Analog Input - continued

F2-04AD-2(L) Addressing

The Do-more CPU module assigns the following memory addresses to this module.

F2-04AD-2(L) X Addressing	
Address	**Description**
Xn	On when the external 24VDC input power is missing or terminal block is removed.
Xn+1	On when the external 24VDC input power is missing or terminal block is removed. (This address stays off if Channel 2 input is not used)
Xn+2	On when the external 24VDC input power is missing or terminal block is removed. (This address stays off if Channel 3 input is not used)
Xn+3	On when the external 24VDC input power is missing or terminal block is removed. (This address stays off if Channel 4 input is not used)
Xn+4	Not used
Xn+5	Not used
Xn+6	Not used
Xn+7	Not used

Xn: Starting X address assigned to this module

F2-04AD-2(L) WX Addressing	
Address	**Description**
WXn	Channel 1 Input Data (0 to 4095 or -4095 to 4095)
WXn+1	Channel 2 Input Data (0 to 4095 or -4095 to 4095)
WXn+2	Channel 3 Input Data (0 to 4095 or -4095 to 4095)
WXn+3	Channel 4 Input Data (0 to 4095 or -4095 to 4095)

WXn: Starting WX address assigned to this module

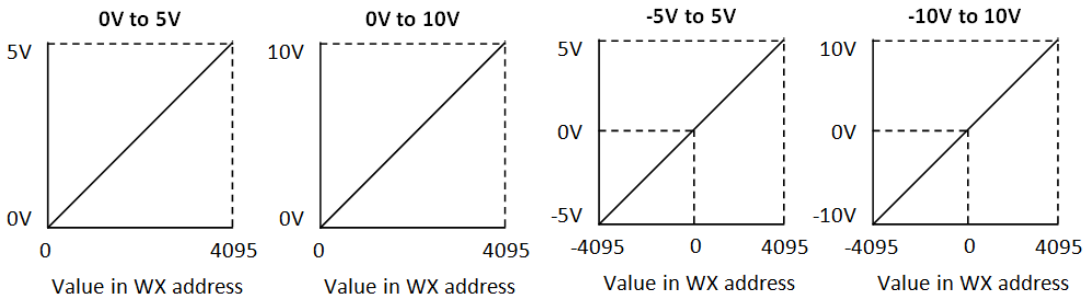

F2-08AD-1, Analog Input

F2-08AD-1 8-Channel Analog Current In	
Number of Channels	8, single ended (1 common)
Input Ranges	4 to 20mA current
Resolution	12 bit (1 in 4096)
Low-pass Filtering	-3 dB at 200 Hz, (-6 dB per octave)
Input Impedance	250Ω ±0.1%, 1/2W current input
Absolute Maximum Ratings	-45mA to +45mA
Converter Type	Successive approximation
Conversion Time (PLC Update Rate)	8 channels per scan maximum
Linearity Error (End to End)	±1 count (0.025% of full scale) maximum
Input Stability	±1 count
Full Scale Calibration Error (Offset error not included)	±5 counts max., @ 20mA current input
Offset Calibration Error	±2 counts max., @ 4mA current input
Step Response	1 ms to 95% of F.S. change
Maximum Inaccuracy	±0.1% @ 77ºF (25ºC) ±0.25% 32º to 140ºF (0º to 60ºC)
Accuracy vs Temperature	±50ppm/ºC maximum full scale (Including max. offset change of two counts)

Recommended Fuse	0.032 A, Series 217 fast-acting, current inputs
Base Power Required 5VDC	100mA
External Power Supply	5mA maximum, +10 to +30VDC
Operating Temperature	32º to 140ºF (0º to 60ºC)
Storage Temperature	-4º to 158ºF (-20º to 70ºC)
Relative Humidity	5 to 95% (non-condensing)
Environmental Air	No corrosive gases permitted
Vibration	MIL STD 810C 514.2
Shock	MIL STD 810C 516.2
Noise Immunity	NEMA ICS3-304
Terminal Type (included)	Removable; D2-8IOCON
ZIPLink Module	ZL-RTB20 (Feedthrough)
ZIPLink Cable	ZL-D2-CBL10 (0.5 m) ZL-D2-CBL10-1 (1.0 m) ZL-D2-CBL10-2 (2.0 m)

One count in the specification table is equal to one least significant bit of the analog data value (1 in 4096).

Note 1: Shields should be grounded at the signal source.

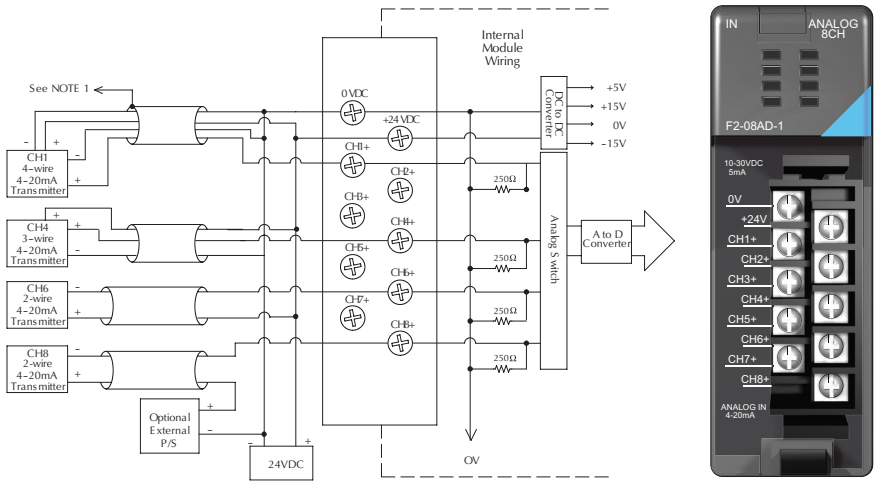

More than one external power supply can be used provided all the power supply commons are connected. A Series 217, 0.032A, fast-acting fuse is recommended for 4-20 mA current loops. If the power supply common of an external power supply is not connected to 0 VDC on the module, then the output of the external transmitter must be isolated. To avoid "ground loop" errors, recommended 4-20 mA transmitter types are: 2 or 3 wire - Isolation between input signal and power supply or 4 wire - Isolation between input signal, power supply, and 4-20 mA output

F2-08AD-1, Analog Input - continued

Setting the Module Jumpers

There are three channel selection jumpers, labeled +1, +2, and +4, that are used to select the number of channels that will be used. See the figure below to find the jumpers on your module. The module is set from the factory for eight channel operation (all three jumpers installed). Any unused channels are not processed, so if you only select channels 1 thru 3, channels 4 thru eight will not be active. The following table shows how to use the jumpers to select the number of channels. Unused jumpers can be stored on a single post to prevent losing them.

Yes = Jumper Installed No = Jumper Removed

F2-08AD-1 Module Jumper Table				
Number of Channels	**Active Channels**	**+1**	**+2**	**+4**
One	Channel 1	No	No	No
Two	Channels 1 - 2	Yes	No	No
Three	Channels 1 - 3	No	Yes	No
Four	Channels 1 - 4	Yes	Yes	No
Five	Channels 1 - 5	No	No	Yes
Six	Channels 1 - 6	Yes	No	Yes
Seven	Channels 1 - 7	No	Yes	Yes
Eight	Channels 1 - 8	Yes	Yes	Yes

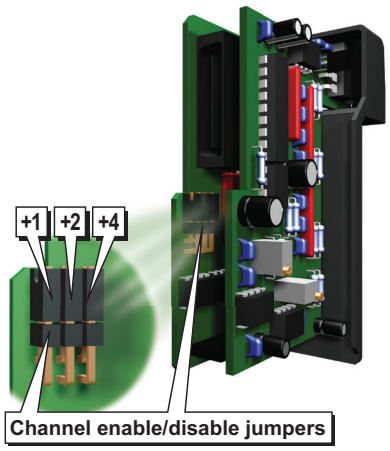

Jumper Location on Modules Having Date Code 0609B5 and Previous

(Two Circuit Board Design)

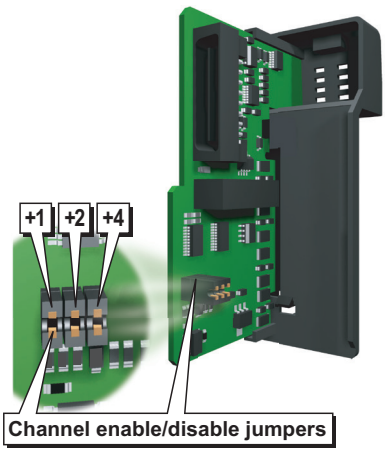

Jumper Location on Modules Having Date Code 0709C1 and Above

(Single Circuit Board Design)

F2-08AD-1, Analog Input - continued

F2-08AD-1 Addressing

The Do-more CPU module assigns the following memory addresses to this module.

F2-08AD-1 X Addressing	
Address	**Description**
Xn	On when the transmitter is broken, the external 24VDC input power is missing or terminal block is removed.
Xn+1	On when the transmitter is broken, the external 24VDC input power is missing or terminal block is removed. (This address stays off if Channel 2 input is not used)
Xn+2	On when the transmitter is broken, the external 24VDC input power is missing or terminal block is removed. (This address stays off if Channel 3 input is not used)
Xn+3	On when the transmitter is broken, the external 24VDC input power is missing or terminal block is removed. (This address stays off if Channel 4 input is not used)
Xn+4	On when the transmitter is broken, the external 24VDC input power is missing or terminal block is removed. (This address stays off if Channel 5 input is not used)
Xn+5	On when the transmitter is broken, the external 24VDC input power is missing or terminal block is removed. (This address stays off if Channel 6 input is not used)
Xn+6	On when the transmitter is broken, the external 24VDC input power is missing or terminal block is removed. (This address stays off if Channel 7 input is not used)
Xn+7	On when the transmitter is broken, the external 24VDC input power is missing or terminal block is removed. (This address stays off if Channel 8 input is not used)

Xn: Starting X address assigned to this module

F2-08AD-1 WX Addressing	
Address	**Description**
WXn	Channel 1 Input Data (0 to 4095)
WXn+1	Channel 2 Input Data (0 to 4095)
WXn+2	Channel 3 Input Data (0 to 4095)
WXn+3	Channel 4 Input Data (0 to 4095)
WXn+4	Channel 5 Input Data (0 to 4095)
WXn+5	Channel 6 Input Data (0 to 4095)
WXn+6	Channel 7 Input Data (0 to 4095)
WXn+7	Channel 8 Input Data (0 to 4095)

WXn: Starting WX address assigned to this module

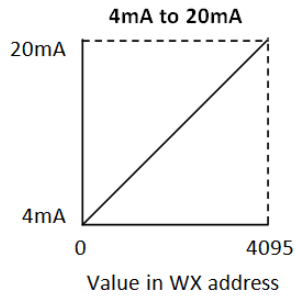

F2-08AD-2, Analog Input

F2-08AD-2 8-Channel Analog Voltage In	
Number of Channels	8, single ended (1 common)
Input Ranges	0 to 5 V, 0 to 10V, ±5V, ±10VDC
Resolution	12 bit (1 in 4096) uni-polar 13 bit (1 in 8191) bi-polar
Active Low-pass Filtering	-3 dB at 200 Hz, (-6 dB per octave)
Input Impedance	>20MΩ
Absolute Maximum Ratings	-75 to +75VDC
Converter Type	Successive approximation
Conversion Time (PLC Update Rate)	8 channels per scan maximum
Linearity Error (End to End)	±1 count (0.025% of full scale) maximum
Input Stability	±1 count
Full Scale Calibration Error (not incl. offset error)	±3 counts maximum
Offset Calibration Error	±1 count maximum (0V input)
Step Response	1 ms to 95% of F.S. change
Maximum Inaccuracy	±0.1% @ 77ºF (25ºC) ±0.3% 32º to 140ºF (0º to 60ºC)
Accuracy vs. Temperature	±50ppm/ºC maximum full scale (Including max. offset change of 2 counts)

Base Power Required 5VDC	100mA
External Power Supply	5mA maximum, +10 to +30 VDC
Operating Temperature	32º to 140ºF (0º to 60ºC)
Storage Temperature	-4º to 158ºF (-20º to 70ºC)
Relative Humidity	5 to 95% (non-condensing)
Environmental Air	No corrosive gases permitted
Vibration	MIL STD 810C 514.2
Shock	MIL STD 810C 516.2
Noise Immunity	NEMA ICS3-304
Terminal Type (included)	Removable; D2-8IOCON
ZIPLink Module	ZL-RTB20 (Feedthrough)
ZIPLink Cable	ZL-D2-CBL10 (0.5 m) ZL-D2-CBL10-1 (1.0 m) ZL-D2-CBL10-2 (2.0 m)

One count in the specification table is equal to one least significant bit of the analog data value (1 in 4096). Includes circuitry to automatically detect broken or open transmitters.

Note 1: Shields should be grounded at the signal source.

Note 2: Connect all external power supply commons.

Note 3: Connect unused channels (CH5+, CH6+, CH7+, CH8+ in this example) to 0VDC.

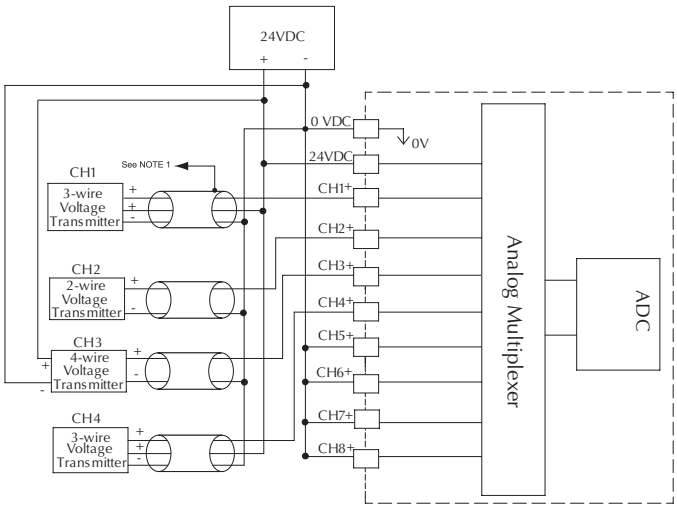

F2-08AD-2, Analog Input - continued

Setting the Module Jumpers

There are three channel selection jumpers, labeled +1, +2, and +4, that are used to select the number of channels that will be used. See the figure below to find the jumpers on your module. The module is set from the factory for eight channel operation (all three jumpers installed). Any unused channels are not processed, so if you only select channels 1 thru 3, channels 4 thru eight will not be active. The following table shows how to use the jumpers to select the number of channels. Unused jumpers can be stored on a single post to prevent losing them.

Yes = Jumper Installed No = Jumper Removed

F2-08AD-2 Module Jumper Table				
Number of Channels	**Active Channels**	**+1**	**+2**	**+4**
One	Channel 1	No	No	No
Two	Channels 1 - 2	Yes	No	No
Three	Channels 1 - 3	No	Yes	No
Four	Channels 1 - 4	Yes	Yes	No
Five	Channels 1 - 5	No	No	Yes
Six	Channels 1 - 6	Yes	No	Yes
Seven	Channels 1 - 7	No	Yes	Yes
Eight	Channels 1 - 8	Yes	Yes	Yes

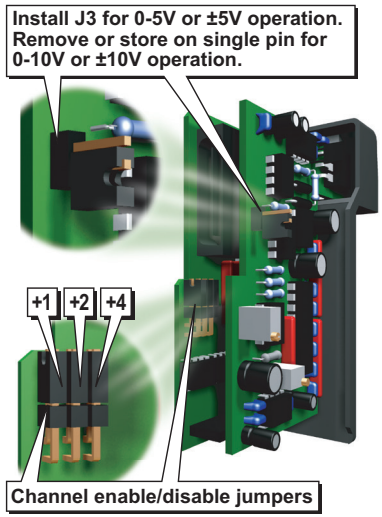

Jumper Location on Modules Having Date Code 0609D4 and Previous

(Two Circuit Board Design)

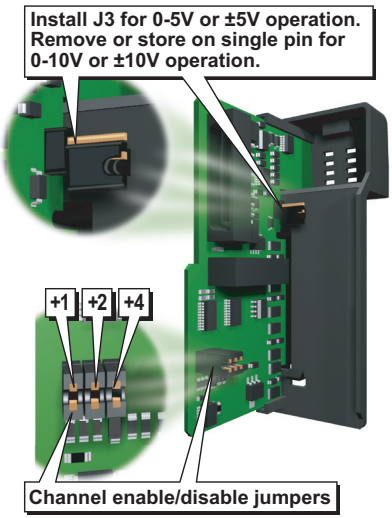

Jumper Location on Modules Having Date Code 0709E1 and Above

(Single Circuit Board Design)

As seen above, there is another jumper labeled J3 that is used to select between the 5V and 10V signal ranges. The module is set from the factory for 10V operation (jumper not installed).

F2-08AD-2, Analog Input - continued

F2-08AD-2 Addressing

The Do-more CPU module assigns the following memory addresses to this module.

F2-08AD-2 X Addressing	
Address	**Description**
Xn	On when the external 24VDC input power is missing or terminal block is removed.
Xn+1	On when the external 24VDC input power is missing or terminal block is removed. (This address stays off if Channel 2 input is not used)
Xn+2	On when the external 24VDC input power is missing or terminal block is removed. (This address stays off if Channel 3 input is not used)
Xn+3	On when the external 24VDC input power is missing or terminal block is removed. (This address stays off if Channel 4 input is not used)
Xn+4	On when the external 24VDC input power is missing or terminal block is removed. (This address stays off if Channel 5 input is not used)
Xn+5	On when the external 24VDC input power is missing or terminal block is removed. (This address stays off if Channel 6 input is not used)
Xn+6	On when the external 24VDC input power is missing or terminal block is removed. (This address stays off if Channel 7 input is not used)
Xn+7	On when the external 24VDC input power is missing or terminal block is removed. (This address stays off if Channel 8 input is not used)

Xn: Starting X address assigned to this module

F2-08AD-2 WX Addressing	
Address	**Description**
WXn	Channel 1 Input Data (0 to 4095 or -4095 to 4095)
WXn+1	Channel 2 Input Data (0 to 4095 or -4095 to 4095)
WXn+2	Channel 3 Input Data (0 to 4095 or -4095 to 4095)
WXn+3	Channel 4 Input Data (0 to 4095 or -4095 to 4095)
WXn+4	Channel 5 Input Data (0 to 4095 or -4095 to 4095)
WXn+5	Channel 6 Input Data (0 to 4095 or -4095 to 4095)
WXn+6	Channel 7 Input Data (0 to 4095 or -4095 to 4095)
WXn+7	Channel 8 Input Data (0 to 4095 or -4095 to 4095)

WXn: Starting WX address assigned to this module

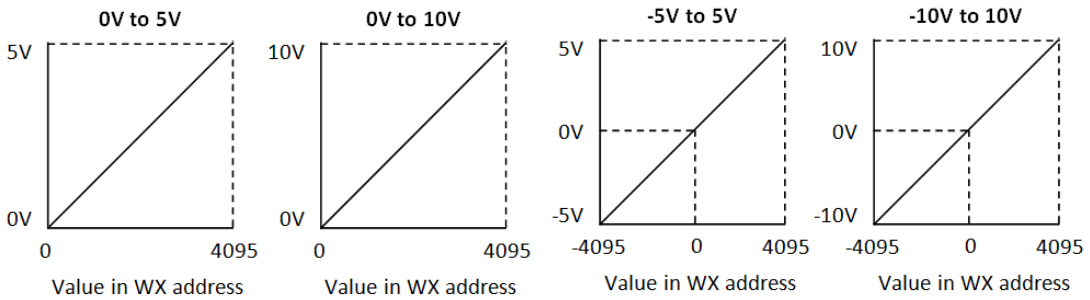

F2-04RTD

F2-04RTD 4-Channel RTD	
Number of Channels	4
Input Ranges	Type Pt100: -200.0 to 850.0 ºC, -328.0 to 1562.0 ºF Type Pt1000: -200.0 to 595.0 ºC, -328.0 to 1103.0 ºF Type jPt100: -38.0 to 450.0 ºC, -36.0 to 842.0 ºF Type CU-10/25Ω: -200.0 to 260.0 ºC, -328.0 to 500.0 ºF
Resolution	16 bit (1 in 65535)
Display Resolution	±0.1 ºC, ±0.1 ºF (±3276.7)
RTD Excitation Current	200µA
Input Type	Differential
Notch Filter	>100 db notches at 50/60Hz -3db =13.1 Hz
Maximum Setting Time	100ms (full-scale step input)
Common Mode Range	0–5 VDC
Absolute Maximum Ratings	Fault protected inputs to ±50VDC
Sampling Rate	160ms per channel

Converter Type	Charge Balancing
Linearity Error	±.05 ºC maximum, ±.01 ºC typical
Maximum Inaccuracy	±1ºC
PLC Update Rate	4 channels per scan maximum
Base Power Required 5VDC	90mA
Operating Temperature	32° to 140°F (0° to 60°C)
Storage Temperature	-4º to 158ºF (-20º to 70ºC)
Temperature Drift	None (self-calibrating)
Relative Humidity	5 to 95% (non-condensing)
Environmental Air	No corrosive gases permitted
Vibration	MIL STD 810C 514.2
Shock	MIL STD 810C 516.2
Noise Immunity	NEMA ICS3-304
Terminal Type (included)	Removable; D2-8IOCON

Note 1. The three wires connecting the RTD to the module must be the same type and length. Do not use the shield or drain wire for the third connection.

Note 2. If an RTD sensor has four wires, the plus sense wire should be left unconnected as shown.

Note 3. This module is not compatible with the ZIPLink wiring systems.

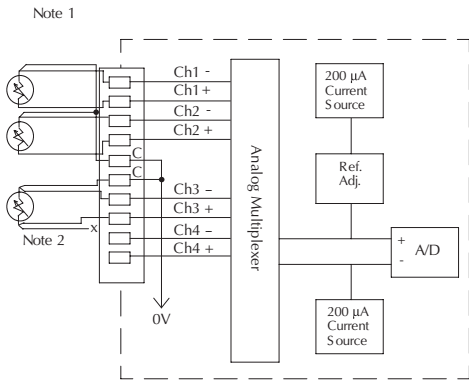

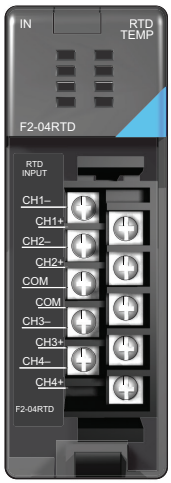

F2-04RTD - continued

Setting the Module Jumpers

There are seven jumpers (J8) located on the PC board of this module. The description of each jumper's function is also located on the PC board. These jumpers configure the module for the following options:

- Number of channels: 1 thru 4.
- The input type: 10Ω or 25Ω copper RTDs; jPt 100Ω, Pt 100Ω or Pt 1000 Ω RTDs.
- Temperature conversion: 2's complement or magnitude + sign format in Fahrenheit or Celsius.

There are two channel selection jumpers, labeled CH+1 and CH+2, that are used to select the number of channels that will be used. The module is set from the factory for four channel operation. Any unused channels are not processed, so if you only select channels 1 thru 3, channel 4 will not be active.

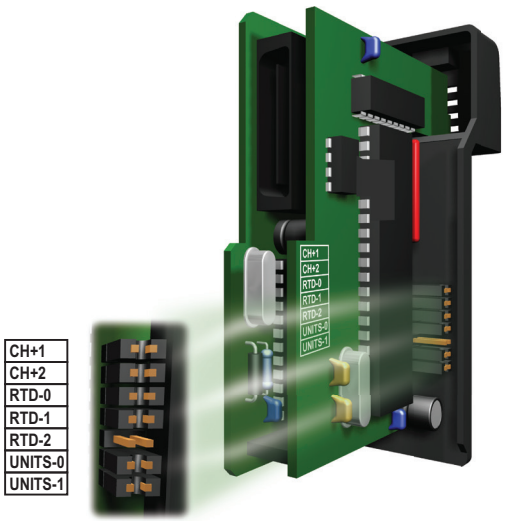

The following table shows how to use the jumpers to select the number of channels. Unused jumpers can be stored on a single post to prevent losing them.

Yes = Jumper Installed No = Jumper Removed

F2-04RTD Module Jumper Table (Channel)			
Number of Channels	**Active Channels**	**CH+1**	**CH+2**
One	Channel 1	No	No
Two	Channels 1 and 2	Yes	No
Three	Channels 1, 2 and 3	No	Yes
Four	Channels 1, 2, 3 and 4	Yes	Yes

F2-04RTD - continued

The jumpers labeled RTD-0, RTD-1, and RTD-2 are used to select the type of RTD.The module can be used with many types of RTDs. All channels of the module must be the same RTD type.

The default setting from the factory is Pt100Ω (RTD-2 comes with the jumper removed). This selects the DIN43760 European type RTD. European curve type RTDs are calibrated to DIN43760, BS1905, or IEC751 specifications which is 0.00385 Ω/Ω/°C(100°C = 138.5 Ω).

The jPt100Ω type is used for the American curve (0.00392 Ω/Ω/°C), platinum 100Ω RTDs. The 10Ω and 25Ω RTD settings are used with copper RTDs.

The following table shows how to arrange the jumpers to set the different input types.

Yes = Jumper Installed No = Jumper Removed

F2-04RTD Module Jumper Table (Input Type)			
RTD Inputs	**RTD-0**	**RTD-1**	**RTD-2**
CU 10Ω	No	No	No
CU 25Ω	Yes	No	No
jPt 100Ω	No	Yes	No
Pt 100Ω	Yes	Yes	No
Pt 1000Ω	No	No	Yes

The last two jumpers, Units-0 and Units-1, are used to set the conversion unit. The 2's complement options are Fahrenheit or Celsius. The module comes from the factory with both jumpers installed. For Fahrenheit, remove Units-1 jumper. For Celsius remove both Units-0 and Units-1 jumpers.

All RTD types are converted into a direct temperature reading in either Fahrenheit or Celsius. The data contains one implied decimal place. For example, a value in WX memory of 1002 would be 100.2°C or °F.

Negative temperatures are represented in 2's complement form.

To view this data format in the Do-more Designer software, select Native.

The following table shows how to arrange the jumpers to set the different conversion units.

Yes = Jumper Installed No = Jumper Removed

F2-04RTD Module Jumper Table (Temperature Conversion Unit)		
Temperature Conversion Units	**Units-0**	**Units-1**
2's Complement (°F)	Yes	No
2's Complement (°C)	No	No

F2-04RTD - continued

F2-04RTD Addressing

The Do-more CPU module assigns the following memory addresses to this module.

F2-04RTD X Addressing	
Address	**Description**
Xn	On when the RTD is open or terminal block is removed.
Xn+1	On when the RTD is open or terminal block is removed. (This address stays off if Channel 2 input is not used)
Xn+2	On when the RTD is open or terminal block is removed. (This address stays off if Channel 3 input is not used)
Xn+3	On when the RTD is open or terminal block is removed. (This address stays off if Channel 4 input is not used)
Xn+4	Not used
Xn+5	Not used
Xn+6	Not used
Xn+7	Not used

Xn: Starting X address assigned to this module

F2-04RTD WX Addressing	
Address	**Description**
WXn	Channel 1 Input Data (Temperature [Unit: 0.1 degree])
WXn+1	Channel 2 Input Data (Temperature [Unit: 0.1 degree])
WXn+2	Channel 3 Input Data (Temperature [Unit: 0.1 degree])
WXn+3	Channel 4 Input Data (Temperature [Unit: 0.1 degree])

WXn: Starting WX address assigned to this module

F2-04THM

F2-04THM 4-Channel Thermocouple	
General Specifications	
Number of Channels	4, differential
Common Mode Range	±5VDC
Common Mode Rejection	90dB min. @ DC, 150dB min. @ 50/60Hz.
Input Impedance	1MΩ
Absolute Maximum Ratings	Fault-protected inputs to ±50VDC
Accuracy vs. Temperature	±5ppm/ºC maximum full scale calibration (Including maximum offset change)
PLC Update Rate	4 channels per scan maximum
External Power Supply	60mA maximum, 18 to 26.4 VDC
Base Power Required 5VDC	110mA
Operating Temperature	32º to 140ºF (0º to 60ºC)
Storage Temperature	-4º to 158ºF (-20º to 70ºC)
Relative Humidity	5 to 95% (non-condensing)
Environmental Air	No corrosive gases permitted
Vibration	MIL STD 810C 514.2
Shock	MIL STD 810C 516.2
Noise Immunity	NEMA ICS3-304
Terminal Type (included)	Non-removable

Thermocouple Specifications		
Input Ranges	Type J -190 to 760ºC Type E -210 to 1000ºC Type K -150 to 1372ºC Type R 65 to 1768ºC Type S 65 to 1768ºC Type T -230 to 400ºC Type B 529 to 1820ºC Type N -70 to 1300ºC Type C 65 to 2320ºC	-310 to 1400ºF -346 to 1832ºF -238 to 2502ºF 149 to 3214ºF 149 to 3214ºF -382 to 752ºF 984 to 3308ºF -94 to 2372ºF 149 to 4208ºF
Display Resolution	±0.1 ºC or ±0.1 ºF	
Cold Junction Compensation	Automatic	
Conversion Time	100ms per channel	
Warm-Up Time	30 minutes typically ±1ºC repeatability	
Linearity Error (End to End)	±0.05 ºC maximum, ±0.01 ºC typical	
Maximum Inaccuracy	±3ºC (excluding thermocouple error)	
Voltage Input Specifications		
Voltage Ranges	0–5V, ±5V, 0–156.25 mV, ±156.25 mVDC	
Resolution	16 bit (1 in 65535)	
Full Scale Calibration Error (not incl. offset error)	±13 counts typical ±33 maximum	
Offset Calibration Error	±1 count maximum, @ 0V input	
Linearity Error (End to End)	±1 count maximum	
Maximum Inaccuracy	±0.02% @ 25ºC (77ºF)	

F2-04THM - continued

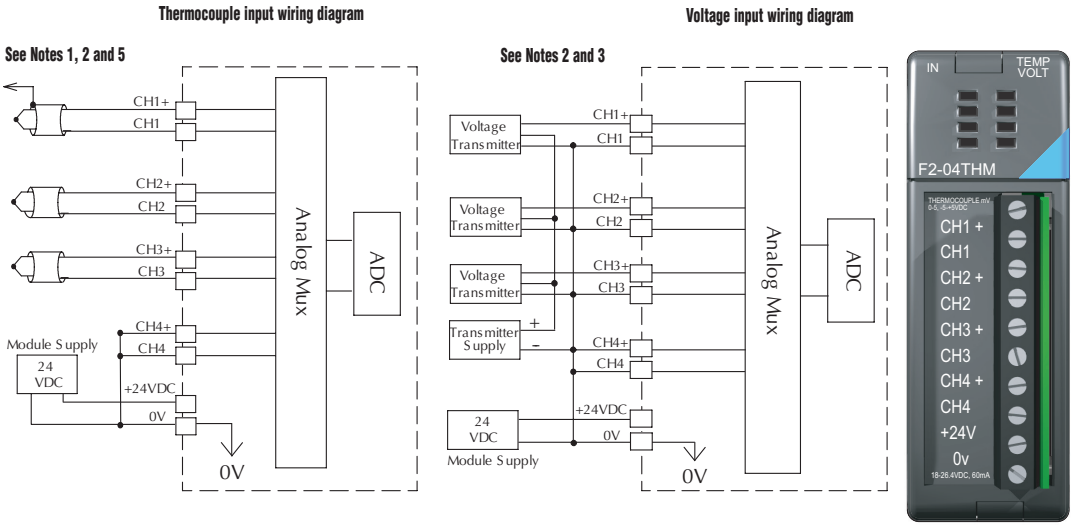

Note 1: Terminate shields at the respective signal source.

Note 2: Connect unused channels to a common terminal (0V, CH4+, CH4).

Note 3: When using 0–156 mV and 5V ranges, connect (-) or (0) volts terminal to 0V to ensure common mode range acceptance.

Note 4. This module is not compatible with the ZIPLink wiring system.

Note 5. With grounded thermocouples, take precautions to prevent having a voltage potential between thermocouple tips. A voltage of 5V or greater between tips will skew measurements.

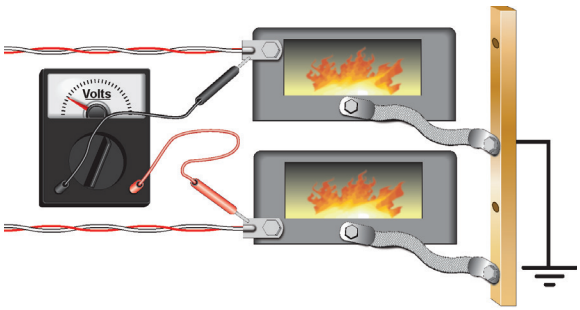

F2-04THM - continued

Setting the Module Jumpers

There are eight jumpers (J7) and one single jumper (J9) located on the PC board of this module. These jumpers configure the module for the following options:

- Number of channels
- Input type
- Thermocouple or Voltage conversion units
- Calibrate enable

Jumper Location on Modules Having Two Circuit Board Design

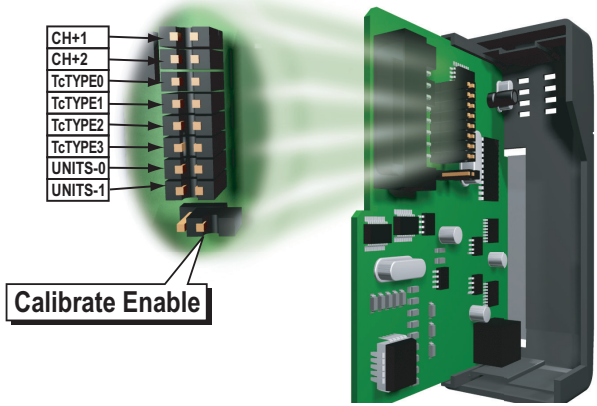

Jumper Location on Modules Having Single Circuit Board Design

There are two channel selection jumpers, labeled CH+1 and CH+2, that are used to select the number of channels that will be used. The module is set from the factory for four channel operation. Any unused channels are not processed. The following table shows how to use the jumpers to select the number of channels. Unused jumpers can be stored on a single post to prevent losing them.

Yes = Jumper Installed No = Jumper Removed

F2-04THM Module Jumper Table (Channel)			
Number of Channels	**Active Channels**	**CH+1**	**CH+2**
One	Channel 1	No	No
Two	Channels 1 and 2	Yes	No
Three	Channels 1, 2 and 3	No	Yes
Four	Channels 1, 2, 3 and 4	Yes	Yes

F2-04THM - continued

The jumpers labeled Tc Type 0, Tc Type 1, Tc Type 2, and Tc Type 3 must be set to match the type of thermocouple being used or the input voltage level. This module can be used with many types of thermocouples, so use the following table to determine your settings.

This module comes from the factory with all four jumpers installed for use with a J type thermocouple. For example, to use an S type thermocouple, remove the jumper labeled Tc Type 2. All channels of the module must be the same thermocouple type or input voltage level.

Yes = Jumper Installed No = Jumper Removed

F2-04THM Module Jumper Table (Input Type)				
Thermocouple/ Voltage Level	**TC Type 0**	**TC Type 1**	**TC Type 2**	**TC Type 3**
J	Yes	Yes	Yes	Yes
K	No	Yes	Yes	Yes
E	Yes	No	Yes	Yes
R	No	No	Yes	Yes
R Wide*	No	Yes	No	No
S	Yes	Yes	No	Yes
T	No	Yes	No	Yes
B	Yes	No	No	Yes
N	No	No	No	Yes
C	Yes	Yes	Yes	No
0–5V	No	Yes	Yes	No
±5V	Yes	No	Yes	No
0–156 mV	No	No	Yes	No
±156mV	Yes	Yes	No	No

** R Wide range is available only on modules with date code 0410E2 and later*

Units-0 and Units-1 jumpers are used to set the conversion unit for either thermocouple or voltage inputs. The options are 2's complement in Fahrenheit or Celsius.

All thermocouple types are converted into a direct temperature reading in either Fahrenheit or Celsius. The data contains one implied decimal place. For example, a value in WX memory of 1002 would be 100.2°C or °F.

For thermocouple ranges which include negative temperatures (J,E,K,T,N), the display resolution is from -3276.7 to +3276.7. For positive-only thermocouple ranges (R,S,B,C), the display resolution is 0 to 6553.5. Negative temperatures are represented in 2's complement form.

F2-04THM - continued

The 2's complement data format may be required to correctly display bipolar data on some operator interfaces. This data format could also be used to simplify averaging a bipolar signal. To view this data format in the Do-more software, select Native.

For unipolar thermocouple ranges (R,S,B,C), 2's complement should be selected.

This module comes with both jumpers installed. For Fahrenheit remove Units-1 jumper. For Celsius remove both Units-0 and Units-1 jumpers. Use the following table to select temperature conversion unit.

Yes = Jumper Installed No = Jumper Removed

F2-04THM Module Jumper Table (Temperature Conversion Unit)		
Temperature Conversion Units	**Units-0**	**Units-1**
2's Complement (°F)	Yes	No
2's Complement (°C)	No	No

The bipolar voltage input ranges, ±5V or ±156mV (see previous page for ±5V and ±156mV input settings), is converted to a 16-bit 2's complement value.

This module comes with both jumpers installed. Use the following table to select voltage conversion unit. For Example, remove the Units-1 jumper and leave the Units-0 jumper installed for 2's complement conversion. For Fahrenheit remove Units-1 jumper. For Celsius remove both Units-0 and Units-1 jumpers.

Yes = Jumper Installed No = Jumper Removed

F2-04THM Module Jumper Table (Voltage Conversion Unit)		
Voltage Conversion Units	**Units-0**	**Units-1**
2's Complement	Yes	No

The Calibrate Enable jumper J9 comes from the factory in the "jumper removed" setting (the jumper is installed over only one of the two pins). Installing this jumper disables the thermocouple active burn-out detection circuitry, which enables you to attach a thermocouple calibrator to the module. To make sure that the output of the thermocouple calibrator is within the 5V common mode voltage range of the module, connect the negative side of the differential voltage input channel to the 0V terminal, then connect the thermocouple calibrator to the differential inputs (for example, Ch 3+ and Ch 3).

For the voltage input ranges, this jumper is inactive and can be installed or removed with no effect on voltage input.

F2-04THM - continued

The Do-more CPU module assigns the following memory addresses to this module.

F2-04THM X Addressing	
Address	**Description**
Xn	On when the thermocouple is open or the external 24VDC input power is missing.
Xn+1	On when the thermocouple is open or the external 24VDC input power is missing. (This address stays off if Channel 2 input is not used)
Xn+2	On when the thermocouple is open or the external 24VDC input power is missing. (This address stays off if Channel 3 input is not used)
Xn+3	On when the thermocouple is open or the external 24VDC input power is missing. (This address stays off if Channel 4 input is not used)
Xn+4	Not used
Xn+5	Not used
Xn+6	Not used
Xn+7	Not used

Xn: Starting X address assigned to this module

F2-04THM WX Addressing	
Address	**Description**
WXn	Channel 1 Input Data (Temperature [Unit: 0.1 degree] or Voltage [0 to 65535[1]])
WXn+1	Channel 2 Input Data (Temperature [Unit: 0.1 degree] or Voltage [0 to 65535[1]])
WXn+2	Channel 3 Input Data (Temperature [Unit: 0.1 degree] or Voltage [0 to 65535[1]])
WXn+3	Channel 4 Input Data (Temperature [Unit: 0.1 degree] or Voltage [0 to 65535[1]])

WXn: Starting WX address assigned to this module

NOTE 1: *The data format of the WX addresses is 'Signed Word'. They store -32768 to 32767 as default. To read and write 0 to 65535 into these memory addresses, use the casting ':U' (':U' is the casting for 'Unsigned' format). For instance, if you selected the voltage input for the first analog input channel and WX0 is assigned to the channel, use 'WX0:U' to access this memory address in the ladder program and other tools in Do-more Designer.*

F2-02DA-1(L), Analog Output

F2-02DA-1(L) 2-Channel Analog Current Output	
Number of Channels	2
Output Ranges	4 to 20mA
Resolution	12 bit (1 in 4096)
Output Type	Single ended, 1 common
Maximum Loop Supply	30VDC
Peak Output Voltage	40VDC (clamped by transient voltage suppressor)
Load Impedance	0Ω minimum
Maximum Load/Power Supply	620Ω/18V, 910Ω/24V, 1200Ω/30V
PLC Update Rate	2 channels per scan maximum
Linearity Error (end to end)	±1 count (0.025% of full scale) maximum
Conversion Settling Time	100µs maximum (full scale change)
Full Scale Calibration Error (not incl. offset error)	±5 counts max., 20mA @ 77ºF (25ºC)
Offset Calibration Error	±3 counts max., 4mA @ 77ºF (25ºC)
Accuracy vs. Temperature	±50ppm/ ºC full scale calibration change (including maximum offset change of 2 counts)
Maximum Inaccuracy	+0.1% @ 77ºF (25ºC) ±0.3% @ 32 to 140°F (0 to 60°C)

Base Power Required 5VDC	40mA
External Power Supply	F2-02DA-1:18 to 30VDC, 60mA F2-02DA-1L: 10 to 15VDC, 70mA (Add 20mA for each current loop used)
Operating Temperature	32º to 140ºF (0º to 60ºC)
Storage Temperature	-4º to 158ºF (-20º to 70ºC)
Relative Humidity	5 to 95% (non-condensing)
Environmental Air	No corrosive gases permitted
Vibration	MIL STD 810C 514.2
Shock	MIL STD 810C 516.2
Noise Immunity	NEMA ICS3-304
Terminal Type (included)	Removable; D2-8IOCON
ZIPLink Module	ZL-RTB20 (Feedthrough)
ZIPLink Cable	ZL-D2-CBL10 (0.5 m) ZL-D2-CBL10-1 (1.0 m) ZL-D2-CBL10-2 (2.0 m)

One count in the specification table is equal to one least significant bit of the analog data value (1 in 4096).

Note 1: Shields should be connected to the 0V of the module or the 0V of the P/S.

Note 2: Unused voltage outputs should remain open (no connections) for minimum power consumption.

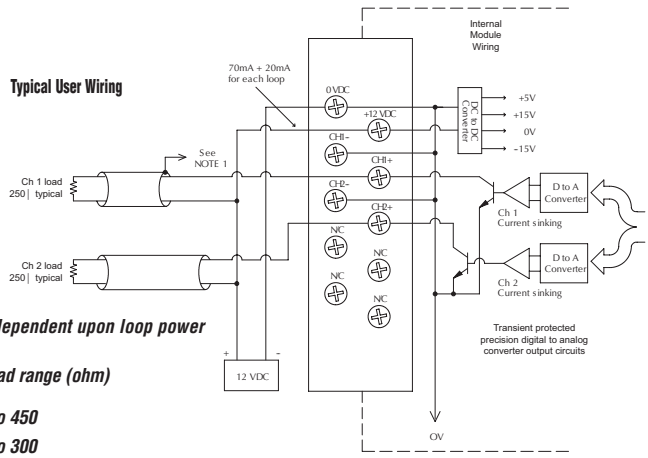

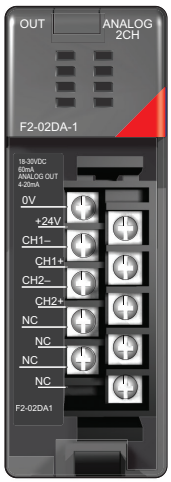

Maximum user load is dependent upon loop power supply.

Loop power supply	*Load range (ohm)*
15VDC	*0 to 450*
12VDC	*0 to 300*
10VDC	*0 to 200*

F2-02DA-1(L), Analog Output - continued

The Do-more CPU module assigns the following memory addresses to this module.

F2-02DA-1(L) WY Addressing	
Address	**Description**
WYn	Channel 1 Output Data (0 to 4095)
WYn+1	Channel 2 Output Data (0 to 4095)

WYn: Starting WY address assigned to this module

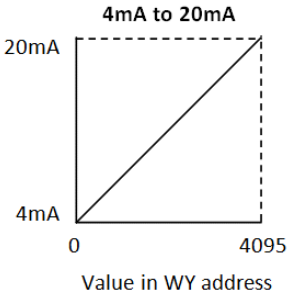

F2-02DA-2(L), Analog Output

F2-02DA-2(L) 2-Channel Analog Voltage Output	
Number of Channels	2
Output Ranges	0 to 5V, 0 to 10V, ±5V, ±10V
Resolution	12 bit (1 in 4096)
Output Type	Single ended, 1 common
Peak Output Voltage	15VDC (clamped by transient voltage suppressor)
Load Impedance	2000Ω minimum
Load Capacitance	0.01 µF maximum
PLC Update Rate	2 channels per scan maximum
Linearity Error (end to end)	±1 count (0.025% of full scale) maximum
Conversion Settling Time	5µs maximum (full scale change)
Full Scale Calibration Error (not incl. offset error)	±12 counts max. unipolar @ 77ºF (25ºC) ±16 counts max. bipolar @ 77ºF (25ºC)
Offset Calibration Error	±3 counts max., unipolar @ 77ºF (25ºC) ±8 counts max., bipolar @ 77ºF (25ºC)
Accuracy vs. Temperature	±50 ppm/ ºC full scale calibration change (including maximum offset change of 2 counts)
Maximum Inaccuracy	+0.3% unipolar ranges @ 77ºF (25ºC) ±0.45% unipolar ranges >77ºF (25ºC) ±0.4% bipolar ranges @77ºF (25ºC) ±0.55% bipolar ranges >77ºF (25ºC)

Base Power Required 5VDC	40mA
External Power Supply	F2-02DA-2: 18 to 30VDC, 60mA (outputs fully loaded) F2-02DA-2L: 10 to 15VDC, 70mA (outputs fully loaded)
Operating Temperature	32º to 140ºF (0º to 60ºC)
Storage Temperature	-4º to 158ºF (-20º to 70ºC)
Relative Humidity	5 to 95% (non-condensing)
Environmental Air	No corrosive gases permitted
Vibration	MIL STD 810C 514.2
Shock	MIL STD 810C 516.2
Noise Immunity	NEMA ICS3-304
Terminal Type (included)	Removable; D2-8IOCON
ZIPLink Module	ZL-RTB20 (Feedthrough)
ZIPLink Cable	ZL-D2-CBL10 (0.5 m) ZL-D2-CBL10-1 (1.0 m) ZL-D2-CBL10-2 (2.0 m)

One count in the specification table is equal to one least significant bit of the analog data value (1 in 4096).

Note1: Shields should be connected to the 0V of the module or the 0V of the P/S.

Note 2: Unused voltage outputs should remain open (no connections) for minimum power consumption.

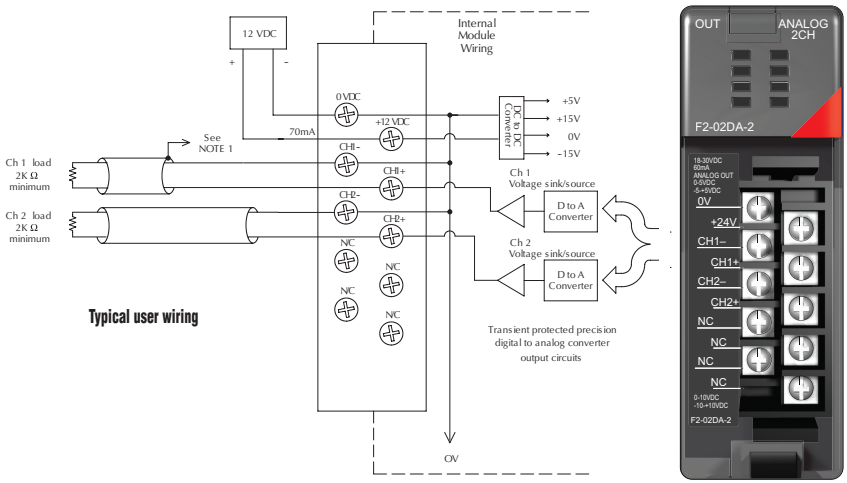

F2-02DA-2(L), Analog Output - continued

The F2-02DA-2(L) Analog Output module uses jumpers for selecting the voltage ranges for each channel. The range of each channel can be independently set. Available operating ranges are 0–5 V, 0–10 V, ±5V, and ±10V. There are three jumpers for each channel. Two sets are on the top board, and the third set is along the edge of the bottom board with the black D-shell backplane connector. Install or remove these jumpers to select the desired range.

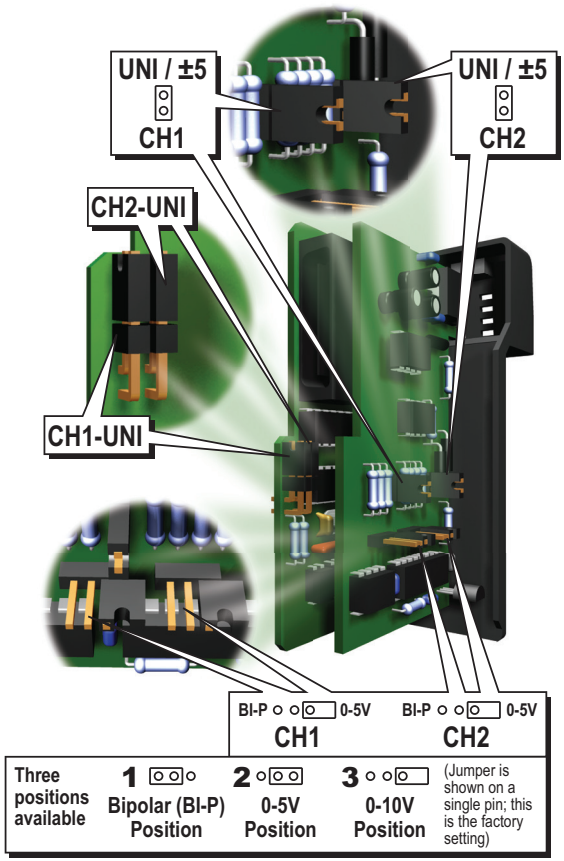

- Two of the top board jumpers are labeled "UNI/±5" and there is one for each channel. These jumpers are used in conjunction with the "BI-P 0-5" jumpers to determine output voltage polarity and range.
- The two bottom board jumpers are labeled "UNI" and there is one for each channel. These jumpers determine the format of the channel output data, and the effect of their settings is independent from that of the other jumpers on the module. With a UNI jumper removed, the corresponding channel requires data values in the range of ±2047. With a UNI jumper installed, the channel requires data values in the range of 0 to 4095.
- The other two top board jumpers are labeled "BI-P 0-5" and there is one for each channel. These jumpers are used in conjunction with the "UNI/±5" jumpers to determine output voltage polarity and range.

NOTE: It is important to set the module jumpers correctly. The module will not operate correctly if the jumpers are not properly set for the desired voltage range.

F2-02DA-2(L), Analog Output - continued

The table below lists the eight possible combinations of voltage ranges and data formats along with their corresponding jumper settings. For most applications, use one of the four standard selections shown in the shaded blocks in the table. Standard unipolar voltage ranges accept a data format of 0 to 4095. Standard bipolar ranges accept a data format of -2047 to +2047. Unused jumpers can be stored on a single post to prevent losing them.

Yes = Jumper Installed No = Jumper Removed

F2-02DA-2(L) Module Jumper Table					
Voltage Range	Output Data Format	UNI/±5V (Top board)	UNI (Bottom board)	BI-P 0-5V (Top board)	
				BI-P (Bipolar) Position	0-5V Position
0 to 5V	*0 to 4095*	Yes	Yes	No	Yes
0 to 10V	*0 to 4095*	Yes	Yes	No	No
0 to 5V	*±2047*	Yes	No	No	Yes
0 to 10V	*±2047*	Yes	No	No	No
±5V	*±2047*	Yes	No	Yes	No
±10V	*±2047*	No	No	Yes	No
±5V	*0 to 4095*	Yes	Yes	Yes	No
±10V	*0 to 4095*	No	Yes	Yes	No

For example, to select settings of "±5V" voltage range with a "±2047" output data format for channel 1, refer to the table above and the figure on the previous page and arrange the jumpers as follows:

- Install the "CH1" "UNI/±5V" jumper.
- Remove the "CH1-UNI" jumper. Store the jumper so it does not get lost by placing it on one pin.
- Install the "CH1" "BI-P 0-5" jumper in the BI-P (bipolar) position on the left and center pins.

The non-standard selections in the table provide the opposite data format for both unipolar and bipolar voltage ranges. If you are using unipolar output (0–5 V or 0–10 V) on one channel and bipolar output (±5V, ±10V) on the other channel, then one of the outputs will use a non-standard data format.

F2-02DA-2(L), Analog Output - continued

The Do-more CPU module assigns the following memory addresses to this module.

F2-02DA-2(L) WY Addressing	
Address	**Description**
WYn	Channel 1 Output Data (0 to 4095 or -2047 to 2047)
WYn+1	Channel 2 Output Data (0 to 4095 or -2047 to 2047)

WYn: Starting WY address assigned to this module

Unipolar Ranges

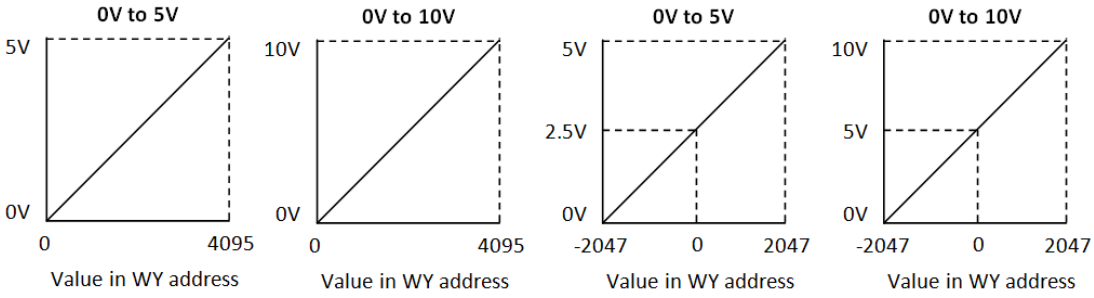

Bipolar Ranges

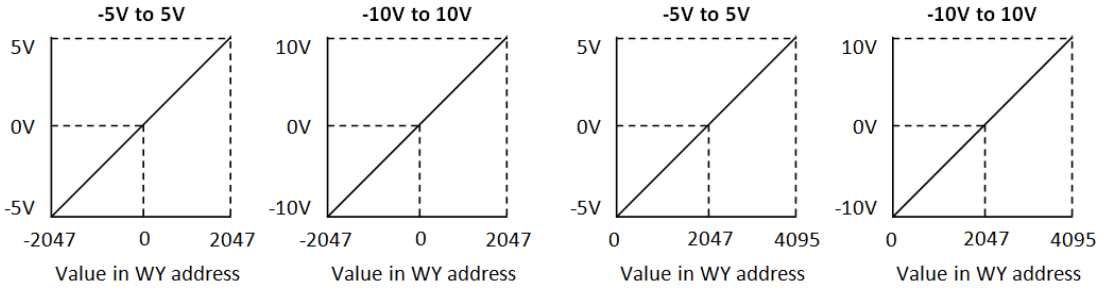

F2-02DAS-1, Analog Output

F2-02DAS-1 2-Channel Isolated Analog Current Output	
Number of Channels	2, isolated
Output Ranges	4–20mA
Resolution	16 bit (1 in 65536)
Output Type	Current sourcing
Isolation Voltage	±750V continuous, channel to channel, channel to logic
Base Power Required 5VDC	100mA
Loop Supply	18–32 VDC
External Power Supply	18–32 VDC @ 50mA per channel
Output Loop Compliance	Vin - 2.5 V
Load Impedance	0–1375 Ω (@ 32V)
Maximum Load/ Power Supply	375Ω /12V, 975Ω /24V, 1375Ω/32V
PLC Update Rate	2 channels per scan maximum
Conversion Settling Time	3ms to 0.1% of full scale
Linearity Error (end to end)	±10 count (±0.015% of full scale) maximum

Gain Calibration Error	±32 counts (±0.05%)
Offset Calibration Error	±13 counts (±0.02%)
Output Drift	50ppm/ ºC
Maximum Inaccuracy	0.07% @ 25ºC (77ºF) 0.18% 0 to 60ºC (32º to 140ºF)
Operating Temperature	0º to 60ºC (32º to 140ºF)
Storage Temperature	-20º to 70ºC (-4º to 158ºF)
Relative Humidity	5 to 95% (non-condensing)
Environmental air	No corrosive gases permitted
Vibration	MIL STD 810C 514.2
Shock	MIL STD 810C 516.2
Noise Immunity	NEMA ICS3-304
Terminal Type (included)	Removable; D2-8IOCON
ZIPLink Module	ZL-RTB20 (Feedthrough)
ZIPLink Cable	ZL-D2-CBL10 (0.5 m) ZL-D2-CBL10-1 (1.0 m) ZL-D2-CBL10-2 (2.0 m)

One count in the specification table is equal to one least significant bit of the analog data value (1 in 65536).

Note 1: Shields should be connected to the 0V terminal of the module.

Note 2: Load must be within compliance voltage.

Note 3: For non-isolated outputs, connect all 0V's together (0V1…0V2) and connect all +V's together (+V…+V2).

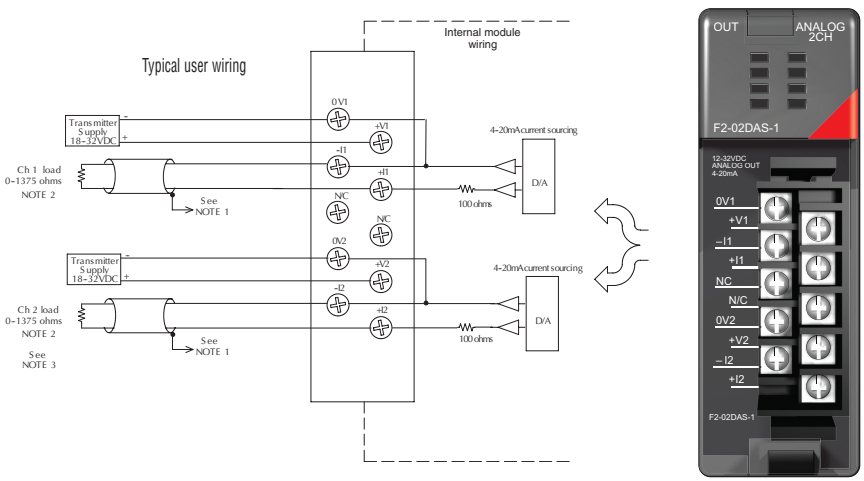

F2-02DAS-1, Analog Output - continued

The Do-more CPU module assigns the following memory addresses to this module.

F2-02DAS-1 WY Addressing	
Address	**Description**
WYn	Channel 1 Output Data (0 to 65535[1])
WYn+1	Channel 2 Output Data (0 to 65535[1])

WYn: Starting WY address assigned to this module

NOTE 1: *The data format of the WY addresses is 'Signed Word'. They store -32768 to 32767 as default. To read and write 0 to 65535 into these memory addresses, use the casting ':U' (':U' is the casting for 'Unsigned' format). For instance, if WY0 is assigned to the first analog output channel, use 'WY0:U' to access this memory address in the ladder program and other tools in Do-more Designer.*

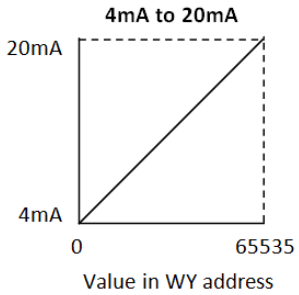

F2-02DAS-2, Analog Output

F2-02DAS-2 2-Channel Isolated Analog Voltage Output	
Number of Channels	2, isolated
Output Ranges	0–5 V, 0–10 V
Resolution	16 bit (1 in 65536)
Output Type	Sourced through external loop supply
Isolation Voltage	±750V continuous, channel to channel, channel to logic
Base Power Required 5VDC	60mA
External Power Supply	21.6–26.4 VDC @ 60mA per channel
Load Impedance	2kΩ min
PLC Update Rate	2 channels per scan maximum
Conversion Settling Time	3ms to 0.1% of full scale
Linearity Error (end to end)	±10 count (±0.015% of full scale) maximum
Gain Calibration Error	±32 counts (±0.05%)
Offset Calibration Error	±13 counts (±0.02%)
Output Drift	50ppm/ºC
Maximum Inaccuracy	0.07% @ 25ºC (77ºF) 0.18% 0 to 60ºC (32º to 140ºF)
Operating Temperature	0º to 60ºC (32º to 140ºF)
Storage Temperature	-20º to 70ºC (-4º to 158ºF)
Relative Humidity	5 to 95% (non-condensing)
Environmental air	No corrosive gases permitted
Vibration	MIL STD 810C 514.2
Shock	MIL STD 810C 516.2
Noise Immunity	NEMA ICS3-304
Terminal Type (included)	Removable; D2-8IOCON
ZIPLink Module	ZL-RTB20 (Feedthrough)
ZIPLink Cable	ZL-D2-CBL10 (0.5 m) ZL-D2-CBL10-1 (1.0 m) ZL-D2-CBL10-2 (2.0 m)

Note1: Shields should be connected to the 0V of the module or the 0V of the P/S.

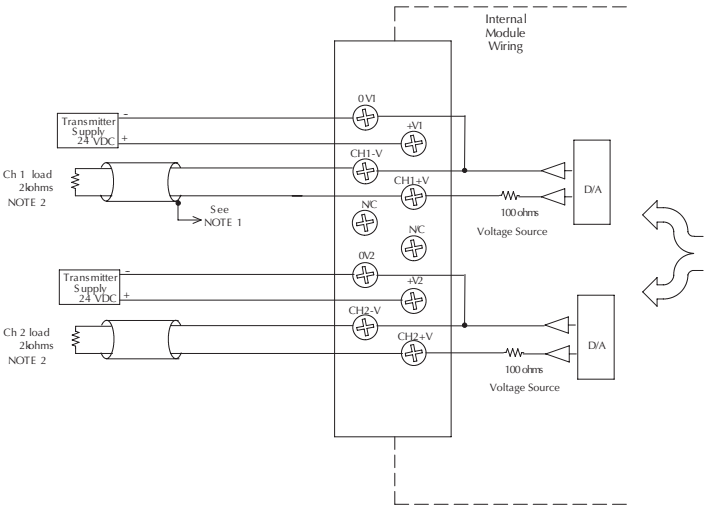

F2-02DAS-2, Analog Output - continued

Setting the Module Jumpers

The F2-02DAS-2 Analog Output module uses jumpers for selecting the voltage range for each channel. The range of each channel can be independently set. The available operating ranges are 0–5 V and 0–10 V.

There is one jumper for each channel. Install or remove these jumpers to select the desired range. See the figures below to find the jumpers on your module. The module is set from the factory for the 0–5 V range. Refer to the following table in order to configure module differently. Unused jumpers can be stored on a single post to prevent losing them.

NOTE: *It is important to set the module jumpers correctly. The module will not operate correctly if the jumpers are not properly set for the desired voltage range.*

Yes = Jumper Installed **No = Jumper Removed**

F2-02DAS-2 Module Jumper Table	
Voltage Range	**0-5V/0-10V Jumper**
0 to 5V	Yes
0 to 10V	No

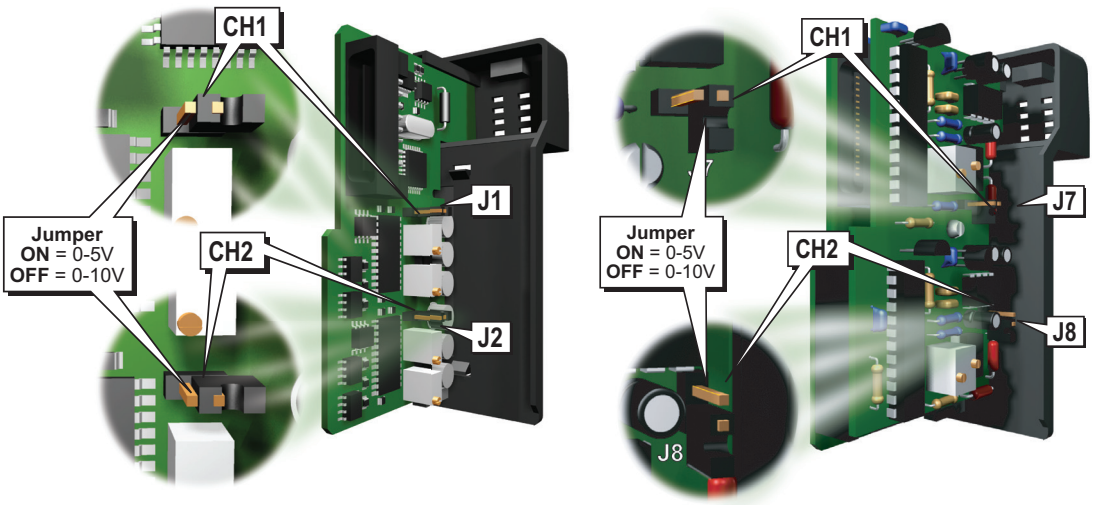

F2-02DAS-2, Analog Output - continued

The Do-more CPU module assigns the following memory addresses to this module.

F2-02DAS-2 WY Addressing	
Address	**Description**
WYn	Channel 1 Output Data (0 to 65535[1])
WYn+1	Channel 2 Output Data (0 to 65535[1])

WYn: Starting WY address assigned to this module

NOTE 1: *The data format of the WY addresses is 'Signed Word'. They store -32768 to 32767 as default. To read and write 0 to 65535 into these memory addresses, use the casting ':U' (':U' is the casting for 'Unsigned' format). For instance, if WY0 is assigned to the first analog output channel, use 'WY0:U' to access this memory address in the ladder program and other tools in Do-more Designer.*

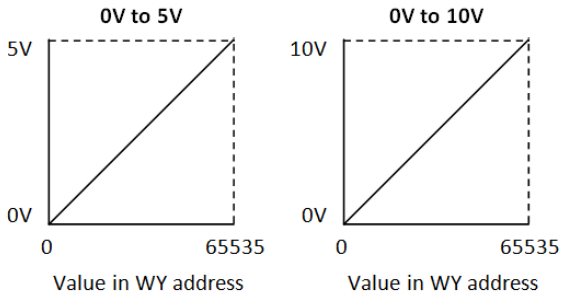

F2–08DA–1, Analog Output

F2-08DA-1 8-Channel Analog Current Output	
Number of Channels	8, single-ended
Output Ranges	4 to 20mA
Resolution	12 bit (1 in 4096)
Output Type	Current sinking or current sourcing
Base Power Required 5VDC	30mA
Maximum Loop Voltage	30VDC
External Power Supply	18 to 30VDC, 50mA., class 2 (Add 20mA for each current loop used)
Source Load	0–400 Ω @ 18–30 VDC
Sink Load	0–600Ω/18V, 0–900Ω/24V, 0–1200Ω/30V
Total Load (sink + source)	600Ω/18V, 900Ω/24V, 1200Ω/30V
PLC Update Rate	8 channels per scan maximum
Conversion Settling Time	400µs maximum (full scale change)
Linearity Error (end to end)	±2 count (±0.050% of full scale) maximum
Full Scale Calibration Error	±12 counts max. sinking @ any load ±12 counts max. sourcing @ 125Ω load ±18 counts max. sourcing @ 250Ω load ±26 counts max. sourcing @ 400Ω load
Offset Calibration Error	±9 counts max. sinking @ any load ±9 counts max. sourcing @ 125Ω load ±11 counts max. sourcing @ 250Ω load ±13 counts max. sourcing @ 400Ω load
Maximum Full Scale Inaccuracy @ 60ºC	0.5% sinking (any load) sinking & sourcing @ 125Ω load 0.64% sourcing @ 250Ω load 0.83% sourcing @ 400Ω load
Maximum Full Scale Inaccuracy @ 25ºC *(Incudes all errors and temp drift)*	0.3% sinking (any load) sinking & sourcing @ 125Ω load 0.44% sourcing @ 250Ω load 0.63% sourcing @ 400Ω load
Operating Temperature	32º to 140ºF (0º to 60ºC)
Storage Temperature	-4 to 158ºF(-20 to 70ºC)
Relative Humidity	5% to 95% (non-condensing)
Environmental air	No corrosive gases permitted
Vibration	MIL STD 810C 514.2
Shock	MIL STD 810C 516.2
Noise Immunity	NEMA ICS3-304
Terminal Type (included)	Removable; D2-16IOCON
ZIPLink Module	ZL-RTB20 (Feedthrough)
ZIPLink Cable	ZL-D2-CBL19 (0.5 m) ZL-D2-CBL19-1 (1.0 m) ZL-D2-CBL19-2 (2.0 m) ZL-D2-CBL19-1P (1.0 m Pigtail) ZL-D2-CBL19-2P (2.0 m Pigtail)

Note 1: Shields should be connected to the 0V of the module.

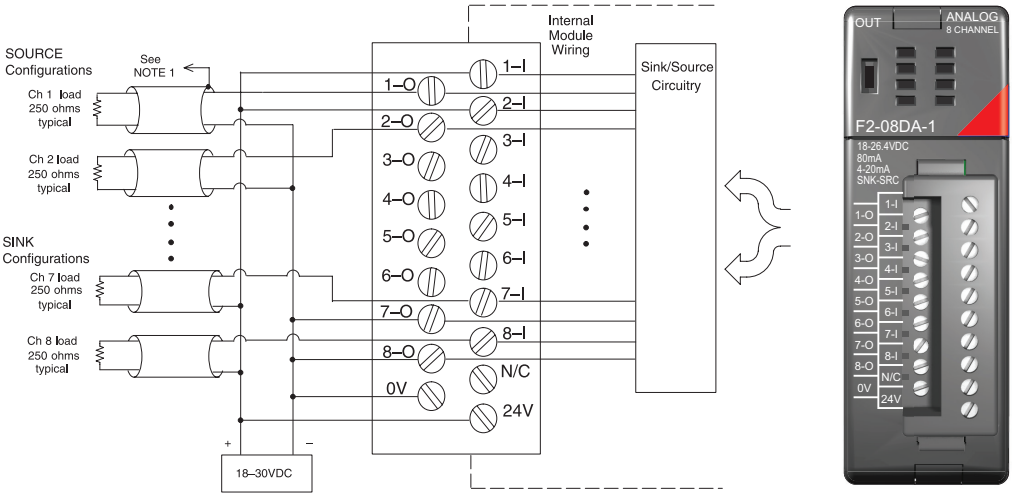

F2–08DA–1, Analog Output - continued

The Do-more CPU module assigns the following memory addresses to this module.

F2-08DA-1 WY Addressing	
Address	**Description**
WYn	Channel 1 Output Data (0 to 4095)
WYn+1	Channel 2 Output Data (0 to 4095)
WYn+2	Channel 3 Output Data (0 to 4095)
WYn+3	Channel 4 Output Data (0 to 4095)
WYn+4	Channel 5 Output Data (0 to 4095)
WYn+5	Channel 6 Output Data (0 to 4095)
WYn+6	Channel 7 Output Data (0 to 4095)
WYn+7	Channel 8 Output Data (0 to 4095)

WYn: Starting WY address assigned to this module

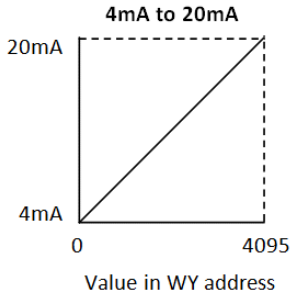

F2-08DA-2, Analog Output

F2-08DA-2 8-Channel Analog Voltage Output	
Number of Channels	8, single-ended, 1 common
Output Ranges	0 to 5V, 0 to 10V
Resolution	12 bit (1 in 4096)
Output Type	Voltage sourcing
Base Power Required 5VDC	60mA
External Power Supply	21.6-26.4 VDC, 140mA (outputs fully loaded)
Peak Output Voltage	15VDC (clamped by transient voltage suppressor)
Load Impedance	1–10 kΩ
Load Capacitance	0.01 µF maximum
PLC Update Rate	8 channels per scan maximum
Conversion Settling Time	400µs maximum (full scale change) 4.5 ms to 9ms for digital out to analog out
Linearity Error (end to end)	±1 count (±0.025% of full scale) maximum

Full Scale Calibration Error	±12 counts max. unipolar @ 25ºC (77ºF)
Offset Calibration Error	±3 counts max., unipolar @ 25ºC (77ºF)
Accuracy vs. Temperature	±57ppm/ ºC full scale calibration change (including maximum offset change of 2 counts)
Maximum Inaccuracy	±0.3% @ 25ºC (77ºF) ±0.45% @ 0-60ºC (32-140ºF)
Operating Temperature	0º to 60ºC (32º to 140°F)
Storage Temperature	-20º to 70ºC (-4º to 158ºF)
Relative Humidity	5 to 95% (non-condensing)
Environmental air	No corrosive gases permitted
Vibration	MIL STD 810C 514.2
Shock	MIL STD 810C 516.2
Noise Immunity	NEMA ICS3-304
Terminal Type (included)	Removable; D2-8IOCON
ZIPLink Module	ZL-RTB20 (Feedthrough)
ZIPLink Cable	ZL-D2-CBL10 (0.5 m) ZL-D2-CBL10-1 (1.0 m) ZL-D2-CBL10-2 (2.0 m)

One count in the specification table is equal to one least significant bit of the analog data value (1 in 4096).

Note 1: Shields should be connected to the 0V of the module.

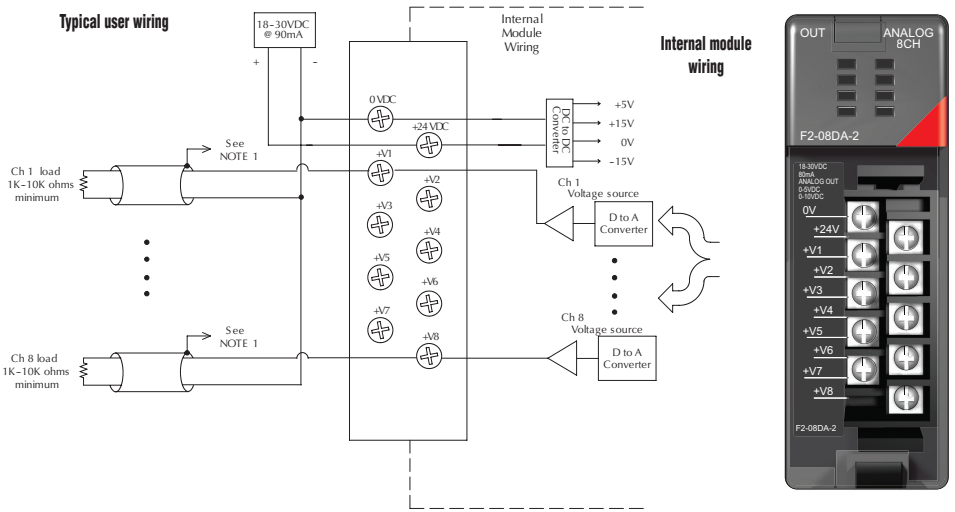

F2-08DA-2, Analog Output- continued

Setting the Module Jumpers

The F2-08DA-2 module uses one jumper to select between the 0–5 V or 0–10 V operating ranges. Refer to the following figure and table for proper selection of voltage range. The output data format remains 0–4095 for either voltage range selected. Unused jumpers can be stored on a single post to prevent losing them.

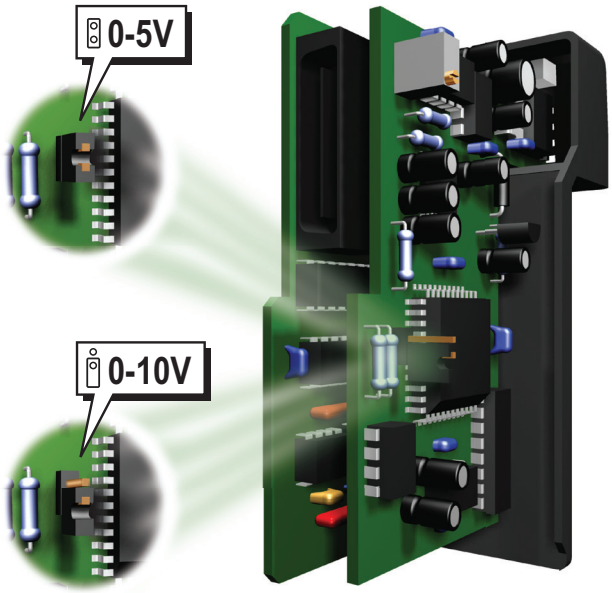

Yes = Jumper Installed No = Jumper Removed

F2-08DA-2 Module Jumper Table		
Voltage Range	Output Data Format	0–5 V/0–10 V Jumper (top board)
0 to 5V	*0 to 4095*	Yes
0 to 10V	*0 to 4095*	No

F2-08DA-2, Analog Output- continued

The Do-more CPU module assigns the following memory addresses to this module.

F2-08DA-2 WY Addressing	
Address	**Description**
WYn	Channel 1 Output Data (0 to 4095)
WYn+1	Channel 2 Output Data (0 to 4095)
WYn+2	Channel 3 Output Data (0 to 4095)
WYn+3	Channel 4 Output Data (0 to 4095)
WYn+4	Channel 5 Output Data (0 to 4095)
WYn+5	Channel 6 Output Data (0 to 4095)
WYn+6	Channel 7 Output Data (0 to 4095)
WYn+7	Channel 8 Output Data (0 to 4095)

WYn: Starting WY address assigned to this module

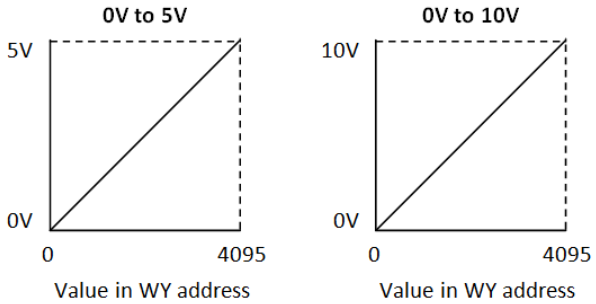

F2–4AD2DA, Analog Input/Output

F2-4AD2DA 4-Channel Analog Current Input / 2-Channel Analog Current Output	
Number of Input Channels	4, single-ended (1 common)
Number of Output Channels	2, single-ended (1 common)
Ranges	4 to 20mA current (Current sinking)
Resolution	12 bit (1 in 4096)
Peak Withstanding Voltage	75VDC, current outputs
Maximum Continuous Overload	-40 to +40mA, each current output
Input Impedance	250Ω, ±0.1%, 1/2W, 25ppm/ °C current input resistance
External Load Resistance	0Ω minimum, current outputs
Maximum Loop Supply	30VDC
Recommended Fuse	0.032 A, series 217 fast-acting, current inputs
Maximum Load/Power Supply	910Ω/24V, current outputs 620Ω/18V, 1200 Ω/30 V
Active Low-pass Filter	-3dB @ 20Hz, 2 poles (-12dB per octave)
Linearity Error (best fit)	±1 count (±0.025% of full scale) maximum
Output Settling Time	100µs maximum (full scale change)

Accuracy vs. Temperature	±50ppm/ °C full scale calibration change (including maximum offset change)
Maximum Inaccuracy	±0.1% @ 77°F (25°C) ±0.3% @ 32 to 140°F (0 to 60°C)
PLC Update Rate	4 input channels per scan maximum 2 output channels per scan maximum
Base Power Required 5VDC	90mA
External Power Supply Requirement	18–26.4 VDC @ 80mA 20mA per loop
Operating Temperature	32° to 140°F (0° to 60°C)
Storage Temperature	-4° to 158°F (-20° to 70°C)
Relative Humidity	5 to 95% (non-condensing)
Environmental Air	No corrosive gases permitted
Vibration	MIL STD 810C 514.2
Shock	MIL STD 810C 516.2
Noise Immunity	NEMA ICS3-304
Terminal Type (included)	Removable; D2-8IOCON
ZIPLink Module	ZL-RTB20 (Feedthrough)
ZIPLink Cable	ZL-D2-CBL10 (0.5 m) ZL-D2-CBL10-1 (1.0 m) ZL-D2-CBL10-2 (2.0 m)

F2–4AD2DA, Analog Input/Output - continued

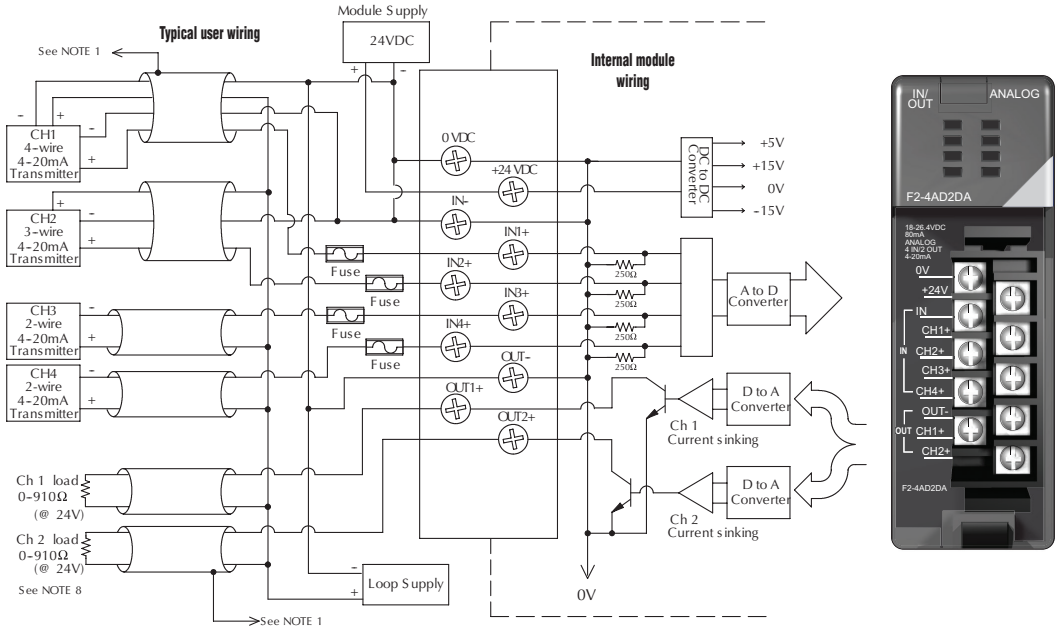

One count in the specification table is equal to one least significant bit of the analog data value (1 in 4096).

Note 1: Shields should be connected at their respective signal source.

Note 2: Unused channel should remain open for minimum power consumption.

Note 3: More than one external power supply can be used provided the power supply commons are connected.

Note 4: A Series 217, 0.032A fast-acting fuse is recommended for 4–20 mA current input loops.

Note 5: f the power supply common of an external power supply is not connected to 0 VDC on the module, then the output of the external transmitter must be isolated. To avoid "ground loop" errors, recommended 4–20 mA transmitter types are: 2 or 3 wire - Isolation between input signal and power supply or 4 wire - Isolation between input signal, power supply, and 4-20 mA output.

Note 6: If an analog channel is connected backwards, then erroneous data values will be returned for that channel.

Note 7: To avoid small errors due to terminal block losses, connect 0 VDC, IN-, and OUT- on the terminal block as shown. The module's internal connection alone of these nodes is not sufficient to permit module performance up to the accuracy specifications.

Note 8: Choose an output transducer resistance according to the maximum load/power listed in the Output Specifications.

F2–4AD2DA, Analog Input/Output - continued

The Do-more CPU module assigns the following memory addresses to this module.

F2-4AD2DA X Addressing	
Address	**Description**
Xn	On when the external 24VDC input power is missing or terminal block is removed.
Xn+1	On when the external 24VDC input power is missing or terminal block is removed.
Xn+2	On when the external 24VDC input power is missing or terminal block is removed.
Xn+3	On when the external 24VDC input power is missing or terminal block is removed.
Xn+4	Not used
Xn+5	Not used
Xn+6	Not used
Xn+7	Not used

Xn: Starting X address assigned to this module

F2-4AD2DA WX Addressing	
Address	**Description**
WXn	Channel 1 Input Data (0 to 4095)
WXn+1	Channel 2 Input Data (0 to 4095)
WXn+2	Channel 3 Input Data (0 to 4095)
WXn+3	Channel 4 Input Data (0 to 4095)

WXn: Starting WX address assigned to this module

F2-4AD2DA WY Addressing	
Address	**Description**
WYn	Channel 1 Output Data (0 to 4095)
WYn+1	Channel 2 Output Data (0 to 4095)

WYn: Starting WY address assigned to this module

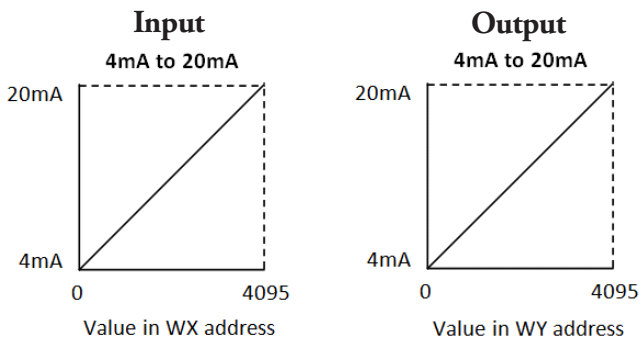

F2-8AD4DA-1 Analog Input/Output

F2-8AD4DA-1 8-Channel Analog Current Input / 4-Channel Analog Current Output	
Input Channels per Module	8, single ended (one common)
Input Range	0 to 20mA
Resolution	12, 14, 16-bit selectable
External DC Power Required	100mA @ 18–26.4 VDC
Max. Continuous Overload	±45mA
Input Impedance	100Ω 0.1% 1/4W
Filter Characteristics	Active low pass, -3dB @ 80 Hz
Conversion Time	12-bit = 1.5 ms per channel 14-bit = 6ms per channel 16-bit = 25ms per channel
Conversion Method	Over sampling successive approximation
Accuracy vs. Temperature	±25ppm / °C Max.
Maximum Inaccuracy	0.1% of range
Linearity Error (End to End)	12-bit = ±2 count max. (±0.06% of range) 14-bit = ±10 count max. (±0.06% of range) 16-bit = ±20 count max. (±0.06% of range) Monotonic with no missing codes
Full Scale Calibration Error (not incl. offset error)	±0.07% of range max.
Offset Calibration Error	±0.03% of range max.
Rec. Fuse (external)	0.032A, Littelfuse Series 217 fast-acting
Base Power Required 5VDC	35mA

Output Channels per Module	4
Output Range	4 to 20mA
Resolution	16-bit, 0.244 mA/bit
Output Type	Current sourcing at 20mA max.
Load Impedance	0–750 Ω
Max. Inaccuracy	0.25% of range
Max. Full Scale Calibration Error (not incl. offset error)	±0.075% of range max.
Max. Offset Calibration Error	±0.1% of range max.
Accuracy vs. Temperature	±25ppm/ °C max. full scale calibration change (± 0.0025% of range / °C)
Max. Crosstalk at DC, 50/60Hz	-70dB, 1 LSB
Linearity Error (End to End)	±1 count max. (±0.025% of full scale) Monotonic with no missing codes
Output Stability and Repeatability	±1 LSB after 10 min. warm-up typical
Output Ripple	0.005% of full scale
Output Settling Time	0.5 ms max., 5µs min. (full scale change)
Max. Continuous Overload	Outputs open circuit protected
Type of Output Protection	Electronically current limited to 20mA or less
Output Signal at Power-up and Power-down	4mA
Terminal Type (included)	Removable; D2-16IOCON
ZIPLink Module	ZL-RTB20 (Feedthrough)
ZIPLink Cable	ZL-D2-CBL19 (0.5 m) ZL-D2-CBL19-1 (1.0 m) ZL-D2-CBL19-2 (2.0 m) ZL-D2-CBL19-1P (1.0 m Pigtail) ZL-D2-CBL19-2P (2.0 m Pigtail)

NOTE: *Module revision B1 or newer of the F2-8AD4DA-1 (found on the product label) must be used with the Do-more PLC.*

F2-8AD4DA-1 Analog Input/Output - continued

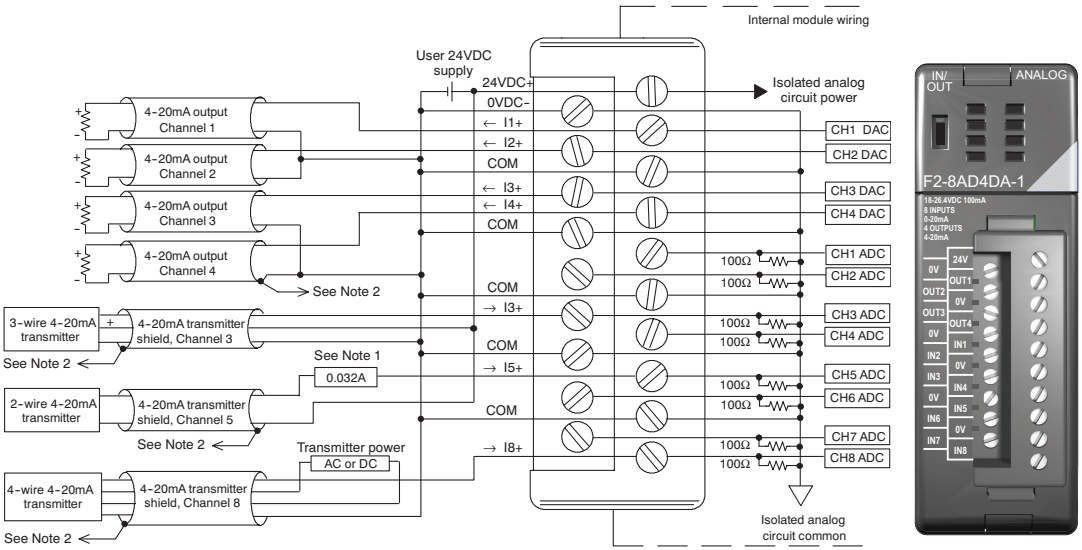

Note 1: A Littlefuse Series 217, 0.032A fast-acting fuse is recommended for all 4-20mA current loop inputs.

Note 2: Connect shields to the 0V of the module; do not connect both ends of shield.

F2-8AD4DA-1 Analog Input/Output - continued

F2-8AD4DA-1 X Addressing	
Address	**Description**
Xn	On when the transmitter is broken, the external 24VDC input power is missing or terminal block is removed.
Xn+1	On when the transmitter is broken, the external 24VDC input power is missing or terminal block is removed.
Xn+2	On when the transmitter is broken, the external 24VDC input power is missing or terminal block is removed.
Xn+3	On when the transmitter is broken, the external 24VDC input power is missing or terminal block is removed.
Xn+4	On when the transmitter is broken, the external 24VDC input power is missing or terminal block is removed.
Xn+5	On when the transmitter is broken, the external 24VDC input power is missing or terminal block is removed.
Xn+6	On when the transmitter is broken, the external 24VDC input power is missing or terminal block is removed.
Xn+7	On when the transmitter is broken, the external 24VDC input power is missing or terminal block is removed.

Xn: Starting X address assigned to this module

F2-8AD4DA-1 WX Addressing	
Address	**Description**
WXn	Channel 1 Input Data (0 to 4095, 0 to 16383 or 0 to 65535[1])
WXn+1	Channel 2 Input Data (0 to 4095, 0 to 16383 or 0 to 65535[1])
WXn+2	Channel 3 Input Data (0 to 4095, 0 to 16383 or 0 to 65535[1])
WXn+3	Channel 4 Input Data (0 to 4095, 0 to 16383 or 0 to 65535[1])
WXn+4	Channel 5 Input Data (0 to 4095, 0 to 16383 or 0 to 65535[1])
WXn+5	Channel 6 Input Data (0 to 4095, 0 to 16383 or 0 to 65535[1])
WXn+6	Channel 7 Input Data (0 to 4095, 0 to 16383 or 0 to 65535[1])
WXn+7	Channel 8 Input Data (0 to 4095, 0 to 16383 or 0 to 65535[1])

WXn: Starting WX address assigned to this module

The Do-more CPU module assigns the following memory addresses to this module.
The resolution of each analog input channel can be selected separately. Available resolutions are 12 bit (0 to 4095), 14 bit (0 to 16383) and 16 bit (0 to 65535). You need to use the memory address WYn+4 to select the resolutions. Please refer to the next page for details.

NOTE 1: *The data format of the WX addresses is 'Signed Word'. They store -32768 to 32767 as default. To read and write 0 to 65535 into these memory addresses, use the casting ':U' (':U' is the casting for 'Unsigned' format). For instance, if you selected the 16 bit resolution for the first analog input channel and WX0 is assigned to the channel, use 'WX0:U' to access this memory address in the ladder program and other tools in Do-more Designer.*

F2-8AD4DA-1 Analog Input/Output - continued

F2-8AD4DA-1 WY Addressing	
Address	**Description**
WYn	Channel 1 Output Data (0 to 65535[2])
WYn+1	Channel 2 Output Data (0 to 65535[2])
WYn+2	Channel 3 Output Data (0 to 65535[2])
WYn+3	Channel 4 Output Data (0 to 65535[2])
WYn+4	Input Resolution Selection
WYn+5	Not used
WYn+6	Input Track and Hold Selection

WYn: Starting WY address assigned to this module

NOTE 2: *The data format of the WY addresses is 'Signed Word'. They store -32768 to 32767 as default. To read and write 0 to 65535 into these memory addresses, use the casting ':U' (':U' is the casting for 'Unsigned' format). For instance, if WY0 is assigned to the first analog output channel, use 'WY0:U' to access this memory address in the ladder program and other tools in Do-more Designer.*

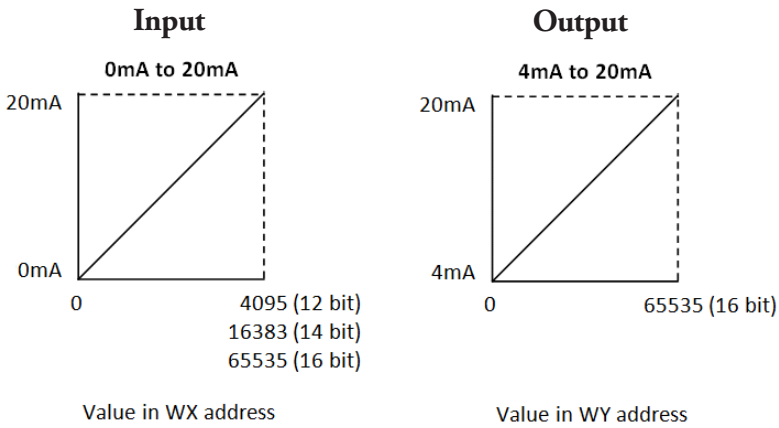

F2-8AD4DA-1 Analog Input/Output - continued

Input Configuration Using Do-more Designer Version 1.1 or Newer

Using the Module Configurations section of the Do-more Designer System Configuration, each of the eight input channels can be individually configured for resolutions: 12, 14, or 16 bit, configured for track and hold options: None (no hold), Minimum, Maximum, or Reset held value, or each input can be individually disabled.

From the System Configurations page, select Module Configuration(s) in the tab on the left. The screen below will appear showing the modules that are pre-configurable. Select the Type F2-8AD4DA-x in the table and click the Edit Config button on the right hand side.

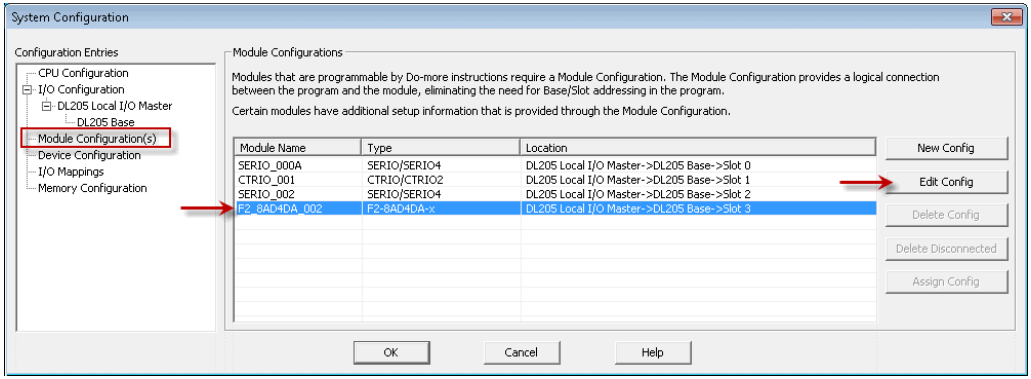

Once the Edit Config button is selected, the Module Settings page shown below will open. From this page each input channel can be configured with Resolution and/or Track and Hold options. Select the radial button next to the desired option for each input and select the OK button when done.

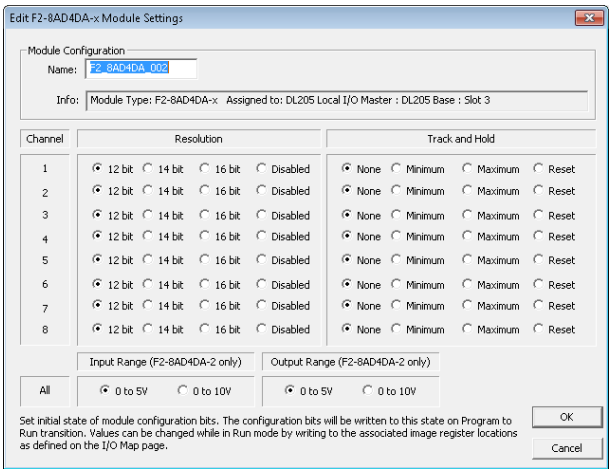

NOTE: *The Input and Output Range selections are for the F2-8AD4DA-2 module only.*

F2-8AD4DA-1 Analog Input/Output - continued

Input Resolution Selection (WYn+4)

If not using Do-more Designer version 1.1 or newer, each of the eight input channels can be individually configured for 12, 14, or 16 bit resolution or disabled with memory address WYn+4 (WYn: Starting WY address assigned to this module). Two (2) bits in this memory address are assigned to each analog input channel.

15	14	13	12	11	10	9	8	7	6	5	4	3	2	1	0
R-8H	R-8L	R-7H	R-7L	R-6H	R-6L	R-5H	R-5L	R-4H	R-4L	R-3H	R-3L	R-2H	R-2L	R-1H	R-1L

Channel Resolution Selection Table

Input Resolution	RnH (Resolution channel n High bit)	RnL (Resolution channel n Low bit)
12 bit	0	0
14 bit	0	1
16 bit	1	0
Disabled	1	1

The HEX data format is used to set up the input resolution as seen in the following example.

Example: An F2-8AD4DA-1 is installed in slot 0 and WY4 is used for the input resolution selection. Input channels 1-4 are 12 bit, channel 5 is 14 bit, channel 6 is 16 bit, and channels 7 and 8 are disabled. In this case, 0xF900 needs to be written into WY4.

Use the MOVE instruction to write the Hex value 0xF900 into WY4.

15	14	13	12	11	10	9	8	7	6	5	4	3	2	1	0
R-8H	R-8L	R-7H	R-7L	R-6H	R-6L	R-5H	R-5L	R-4H	R-4L	R-3H	R-3L	R-2H	R-2L	R-1H	R-1L
1	1	1	1	1	0	0	1	0	0	0	0	0	0	0	0
F				9				0				0			

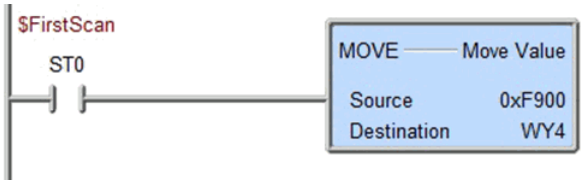

F2-8AD4DA-1 Analog Input/Output - continued

Input Track and Hold Selection (WYn+6)

The track and hold feature for each of the eight inputs can be individually configured for minimum, maximum, no hold, or reset held value with memory address WYn+6 (WYn: Starting WY address assigned to this module). This configuration can be changed "on the fly" while the program is running. Two (2) bits in this memory address are assigned to each analog input channel.

15	14	13	12	11	10	9	8	7	6	5	4	3	2	1	0
T-8H	T-8L	T-7H	T-7L	T-6H	T-6L	T-5H	T-5L	T-4H	T-4L	T-3H	T-3L	T-2H	T-2L	T-1H	T-1L

Channel Track and Hold Selection Table			
Track and Hold Select	**TnH (Track and Hold channel n High bit)**	**TnL (Track and Hold channel n Low bit)**	**Result**
No Track and Hold	0	0	Returns real time input value
Track and Hold Minimum Value	0	1	Maintains lowest measured value
Track and Hold Maximum Value	1	0	Maintains highest measured value
Reset Track and Hold Value	1	1	Resets previously held input value

The HEX data format is used to set up the track and hold option as seen in the following example.

Example: An F2-8AD4DA-1 is installed in slot 0 and WY6 is used for the track and hold selection. Input channel track and hold settings: ch 1-3 = none, ch 4-5 = minimum, ch 6-7 = maximum, ch 8 = reset. In this case, 0xE940 needs to be written into WY6.

Use the MOVE instruction to write the Hex value 0xE940 into WY6.

15	14	13	12	11	10	9	8	7	6	5	4	3	2	1	0
T-8H	T-8L	T-7H	T-7L	T-6H	T-6L	T-5H	T-5L	T-4H	T-4L	T-3H	T-3L	T-2H	T-2L	T-1H	T-1L
1	1	1	0	1	0	0	1	0	1	0	0	0	0	0	0
E				9				4				0			

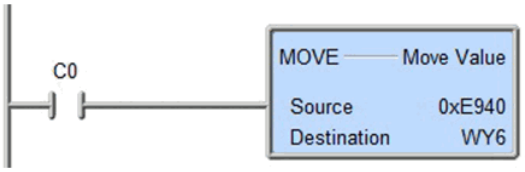

F2-8AD4DA-2 Analog Input/Output

F2-8AD4DA-2 8-Channel Analog Voltage Input / 4-Channel Analog Voltage Output	
Input Channels per Module	8, single ended (one common)
Input Range	0 to 5V, 0 to 10V
Resolution	12, 14, 16-bit selectable
External DC Power Required	80mA @ 18–26.4 VDC
Max. Continuous Overload	±100V
Input Impedance	>10MΩ
Filter Characteristics	Active low pass, -3 dB @ 80 Hz
Conversion Time	12-bit = 1.5 ms per channel 14-bit = 6ms per channel 16-bit = 25ms per channel
Conversion Method	Over sampling successive approximation
Accuracy vs. Temperature	±50ppm / °C Max.
Maximim Inaccuracy	0.1% of range
Linearity Error (End to End)	12-bit = ±1 count max. (±0.025% of range) 14-bit = ±4 count max. (±0.025% of range) 16-bit = ±16 count max. (±0.025% of range) Monotonic with no missing codes
Full Scale Calibration Error (not incl. offset error)	±0.075% of range max.
Offset Calibration Error	±0.025% of range max.
Base Power Required 5VDC	35mA

Output Channels per Module	4
Output Range	0 to 5V, 0 to 10V
Resolution	0 to 5V at 15-bit, 0 to10V at 16-bit, 152 µV/bit
Output Type	Voltage sourcing/sinking at 10mA max.
Load Impedance	>1000Ω
Max. Inaccuracy	0.15% of range
Max. Full Scale Calibration Error (not incl. offset error)	±0.075% of range max.
Max. Offset Calibration Error	±0.025% of range max.
Accuracy vs. Temperature	±50ppm/ °C max. full scale calibration change (± 0.005% of range / °C)
Max. Crosstalk @ DC, 50/60Hz	-70dB, 1 LSB
Linearity Error (End to End)	±1 count max. (±0.025% of full scale) Monotonic with no missing codes
Output Stability and Repeatability	±1 LSB after 10 minute warm-up typical
Output Ripple	0.005% of full scale
Output Settling Time	0.5 ms max., 5µs min. (full scale change)
Max. Continuous Overload	Outputs current limited to 15mA typical
Type of Output Protection	1VDC peak output voltage (clamped by transient voltage suppressor)
Output Signal at Power-up and Power-down	0V
Terminal Type (included)	Removable; D2-16IOCON
ZIPLink Module	ZL-RTB20 (Feedthrough)
ZIPLink Cable	ZL-D2-CBL19 (0.5 m) ZL-D2-CBL19-1 (1.0 m) ZL-D2-CBL19-2 (2.0 m) ZL-D2-CBL19-1P (1.0 m Pigtail) ZL-D2-CBL19-2P (2.0 m Pigtail)

F2-8AD4DA-2 Analog Input/Output - continued

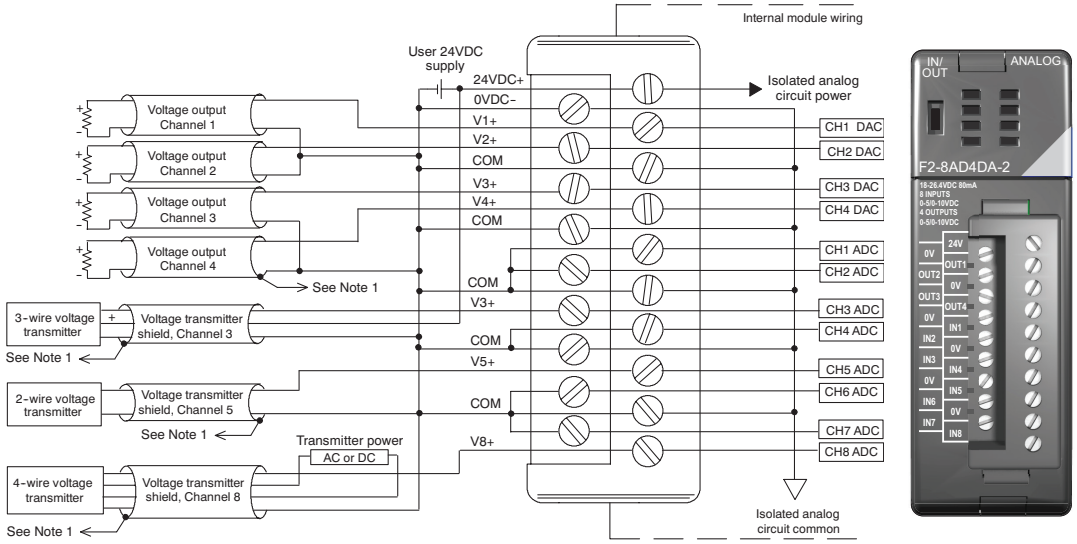

Note 1: Connect shields to the 0V of the module; do not connect both ends of shield.

F2-8AD4DA-2 Analog Input/Output - continued

The Do-more CPU module assigns the following memory addresses to this module.

F2-8AD4DA-2 X Addressing	
Address	**Description**
Xn	Not Used
Xn+1	Not Used
Xn+2	Not Used
Xn+3	Not Used
Xn+4	Not Used
Xn+5	Not Used
Xn+6	Not Used
Xn+7	Not Used

Xn: Starting X address assigned to this module

F2-8AD4DA-2 WX Addressing	
Address	**Description**
WXn	Channel 1 Input Data (0 to 4095, 0 to 16383 or 0 to 65535[1])
WXn+1	Channel 2 Input Data (0 to 4095, 0 to 16383 or 0 to 65535[1])
WXn+2	Channel 3 Input Data (0 to 4095, 0 to 16383 or 0 to 65535[1])
WXn+3	Channel 4 Input Data (0 to 4095, 0 to 16383 or 0 to 65535[1])
WXn+4	Channel 5 Input Data (0 to 4095, 0 to 16383 or 0 to 65535[1])
WXn+5	Channel 6 Input Data (0 to 4095, 0 to 16383 or 0 to 65535[1])
WXn+6	Channel 7 Input Data (0 to 4095, 0 to 16383 or 0 to 65535[1])
WXn+7	Channel 8 Input Data (0 to 4095, 0 to 16383 or 0 to 65535[1])

WXn: Starting WX address assigned to this module

The resolution of each analog input channel can be selected separately. Available resolutions are 12 bit (0 to 4095), 14 bit (0 to 16383) and 16 bit (0 to 65535). You need to use the memory address WYn+4 to select the resolutions. Please refer to the next page for details.

NOTE 1: *The data format of the WX addresses is 'Signed Word'. They store -32768 to 32767 as default. To read and write 0 to 65535 into these memory addresses, use the casting ':U' (':U' is the casting for 'Unsigned' format). For instance, if you selected the 16 bit resolution for the first analog input channel and WX0 is assigned to the channel, use 'WX0:U' to access this memory address in the ladder program and other tools in Do-more Designer.*

F2-8AD4DA-2 Analog Input/Output - continued

F2-8AD4DA-2 WY Addressing	
Address	**Description**
WYn	Channel 1 Output Data (0 to 65535[2])
WYn+1	Channel 2 Output Data (0 to 65535[2])
WYn+2	Channel 3 Output Data (0 to 65535[2])
WYn+3	Channel 4 Output Data (0 to 65535[2])
WYn+4	Input Resolution Selection
WYn+5	Input and Output Ranges Selection
WYn+6	Input Track and Hold Selection

WYn: Starting WY address assigned to this module

NOTE 2: *The data format of the WY addresses is 'Signed Word'. They store -32768 to 32767 as default. To read and write 0 to 65535 into these memory addresses, use the casting ':U' (':U' is the casting for 'Unsigned' format). For instance, if WY0 is assigned to the first analog output channel, use 'WY0:U' to access this memory address in the ladder program and other tools in Do-more Designer.*

Input

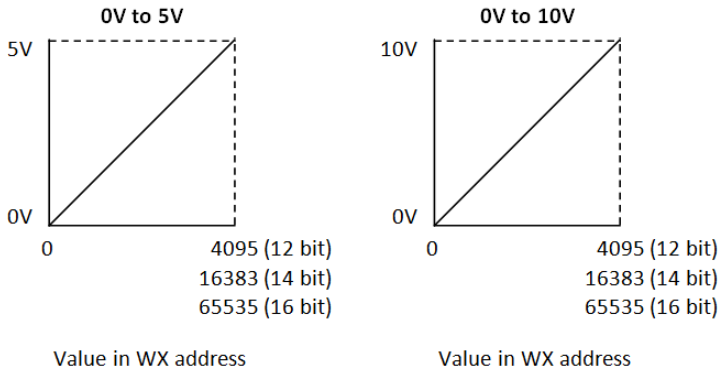

Output

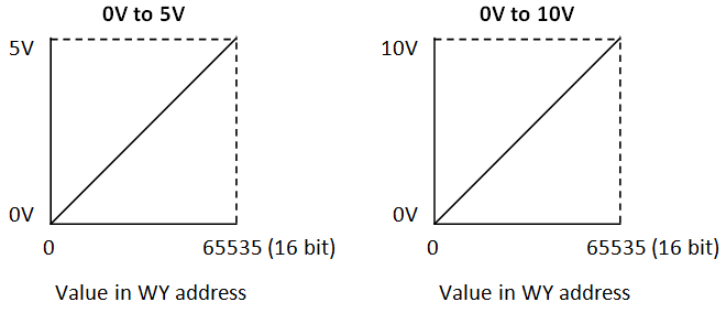

F2-8AD4DA-2 Analog Input/Output - continued

Input Configuration Using Do-more Designer Version 1.1 or Newer

Using the Module Configurations section of the Do-more Designer System Configuration, each of the eight input channels can be individually configured for resolutions: 12, 14, or 16 bit, configured for track and hold options: None (no hold), Minimum, Maximum, or Reset held value, or each input can be individually disabled. Input and output ranges can also be configured for 0 to 5V or 0 to 10V in this section.

From the System Configurations page, select Module Configuration(s) in the tab on the left. The screen below will appear showing the modules that are pre-configurable. Select the Type F2-8AD4DA-x in the table and click the Edit Config button on the right-hand side.

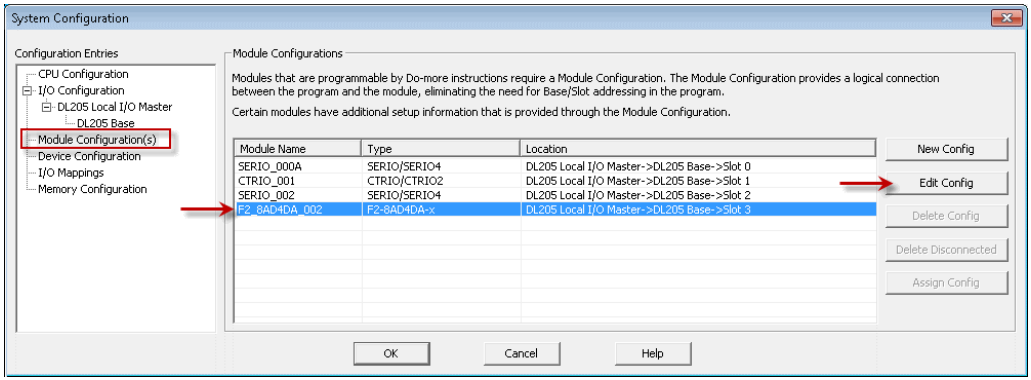

Once the Edit Config button is selected, the Module Settings page shown below will open. From this page each input channel can be configured with Resolution and/or Track and Hold options. Input/output range options are also available. Select the radial button next to the desired options and select the OK button when done.

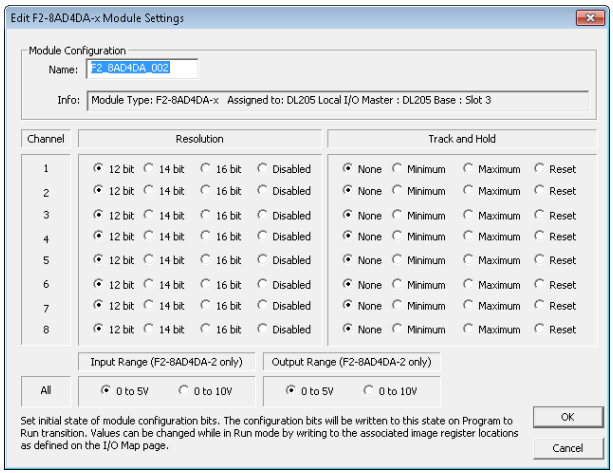

F2-8AD4DA-2 Analog Input/Output - continued

Input Resolution Selection (WYn+4)

If not using Do-more Designer version 1.1 or newer, each of the eight input channels can be individually configured for 12, 14, or 16 bit resolution or disabled with memory address WYn+4 (WYn: Starting WY address assigned to this module). Two (2) bits in this memory address are assigned to each analog input channel.

15	14	13	12	11	10	9	8	7	6	5	4	3	2	1	0
R-8H	R-8L	R-7H	R-7L	R-6H	R-6L	R-5H	R-5L	R-4H	R-4L	R-3H	R-3L	R-2H	R-2L	R-1H	R-1L

Channel Resolution Selection Table		
Input Resolution	RnH (Resolution channel n High bit)	RnL (Resolution channel n Low bit)
12 bit	0	0
14 bit	0	1
16 bit	1	0
Disabled	1	1

The HEX data format is used to set up the input resolution as seen in the following example.

Example: An F2-8AD4DA-2 is installed in slot 0 and WY4 is used for the input resolution selection. Input channels 1-4 are 12 bit, channel 5 is 14 bit, channel 6 is 16 bit, and channels 7 and 8 are disabled. In this case, 0xF900 needs to be written into WY4.

15	14	13	12	11	10	9	8	7	6	5	4	3	2	1	0
R-8H	R-8L	R-7H	R-7L	R-6H	R-6L	R-5H	R-5L	R-4H	R-4L	R-3H	R-3L	R-2H	R-2L	R-1H	R-1L
1	1	1	1	1	0	0	1	0	0	0	0	0	0	0	0
F				9				0				0			

Use the MOVE instruction to write the Hex value 0xF900 into WY4.

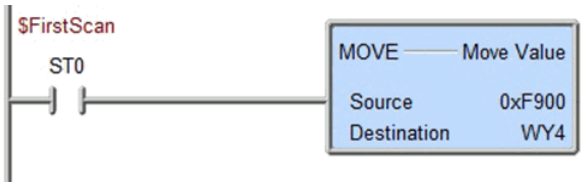

F2-8AD4DA-2 Analog Input/Output - continued

Input and Output Range Selection (WYn+5)

The range of the eight input channels can be collectively set for 0 to 5V or for 0 to10V. The range of the four output channels can also be collectively set for either of the same two voltage ranges. The configuration is stored in memory address WYn+5 (WYn: Starting WY address assigned to this module). Only 2 bits in this memory address are used for the setup.

15	14	13	12	11	10	9	8	7	6	5	4	3	2	1	0
-	-	-	-	-	-	-	OR	-	-	-	-	-	-	-	IR

Input/Output Range Selection Table		
Input/Output Range	IR (Input Range)	OR (Output Range)
0V to 5V	0	0
0V to 10V	1	1

The HEX data format is used to set up the input resolution as seen in the following example.

Example: An F2-8AD4DA-2 is installed in slot 0 and WY5 is used for the input and output resolution selection. Input channel range is set to 0 to 5V and output channel range is set to 0 to 10V. In this case, 0x100 needs to be written into WY5.

Use the MOVE instruction to write the Hex value 0x100 into WY5.

15	14	13	12	11	10	9	8	7	6	5	4	3	2	1	0
-	-	-	-	-	-	-	OR	-	-	-	-	-	-	-	IR
0	0	0	0	0	0	0	1	0	0	0	0	0	0	0	0
0				1				0				0			

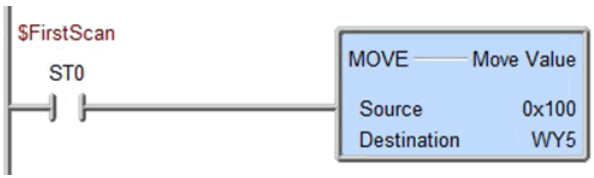

F2-8AD4DA-2 Analog Input/Output - continued

Input Track and Hold Selection (WYn+6)

The track and hold feature for each of the eight inputs can be individually configured for minimum, maximum, no hold, or reset held value with memory address WYn+6 (WYn: Starting WY address assigned to this module). This configuration can be changed "on the fly" while the program is running. Two (2) bits in this memory address are assigned to each analog input channel.

15	14	13	12	11	10	9	8	7	6	5	4	3	2	1	0
T-8H	T-8L	T-7H	T-7L	T-6H	T-6L	T-5H	T-5L	T-4H	T-4L	T-3H	T-3L	T-2H	T-2L	T-1H	T-1L

Channel Track and Hold Selection Table			
Track and Hold Select	**TnH (Track and Hold channel n High bit)**	**TnL (Track and Hold channel n Low bit)**	**Result**
No Track and Hold	0	0	Returns real time input value
Track and Hold Minimum Value	0	1	Maintains lowest measured value
Track and Hold Maximum Value	1	0	Maintains highest measured value
Reset Track and Hold Value	1	1	Resets previously held input value

The HEX data format is used to set up the track and hold option as seen in the following example.

Example: An F2-8AD4DA-2 is installed in slot 0 and WY6 is used for the track and hold selection. Input channel track and hold settings: ch 1-3 = none, ch 4-5 = minimum, ch 6-7 = maximum, ch 8 = reset. In this case, 0xE940 needs to be written into WY6.

Use the MOVE instruction to write the Hex value 0xE940 into WY6.

15	14	13	12	11	10	9	8	7	6	5	4	3	2	1	0
T-8H	T-8L	T-7H	T-7L	T-6H	T-6L	T-5H	T-5L	T-4H	T-4L	T-3H	T-3L	T-2H	T-2L	T-1H	T-1L
1	1	1	0	1	0	0	1	0	1	0	0	0	0	0	0
E				9				4				0			

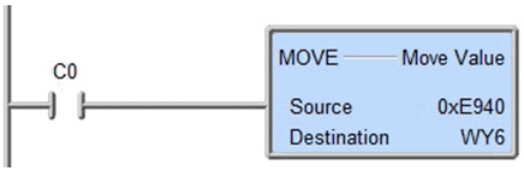

Specifications: Specialty Modules

In This Chapter...

Specialty Modules Overview 7-2
Specialty Modules 7-2
H2-CTRIO(2) 7-4
H2-CTRIO(2) Overview 7-4
H2-CTRIO(2) Specifications 7-6
H2-CTRIO(2) LED Indicators 7-7
H2-CTRIO(2) Jumper Setup 7-8
Wiring Information 7-9
PNP Field Device (source) 7-9
NPN Field Device (sink) 7-9
H2-CTRIO(2) Input Wiring Examples 7-10
TTL Quadrature Encoder Field Wiring 7-10
TTL Input Wiring Example 7-10
Quadrature Encoder Wiring Example 7-11
NPN Open Collector Device 7-11
PNP Open Collector Device 7-11
H2-CTRIO(2) Output Wiring Examples 7-12
H2-ECOM100 7-13
H2-ECOM100 Overview 7-13
H2-ECOM100 Specifications 7-13
H2-ECOM100 LED Indicators 7-14
H2-ECOM100 Network Identifiers 7-14
H2-ECOM100 Network Layouts 7-17
H2-ECOM100 Network Cabling 7-18
H2-ERM(100)/ H2-EBC100 7-21
H2-ERM(100) Overview 7-21
H2-ERM(100) Specifications 7-21

H2-ERM(100) LED Indicators 7-22
H2-EBC100 Overview 7-22
H2-EBC100 Specifications 7-22
H2-EBC100 LED Indicators 7-23
H2-ERM(100)/H2-EBC100 Network Identifiers 7-23
H2-ERM(100)/H2-EBC100 Network Layouts 7-26
H2-ERM(100)/H2-EBC100 Network Cabling 7-27
H2-SERIO(-4) 7-29
H2-SERIO(-4) Overview 7-29
H2-SERIO(-4) Specifications 7-31
H2-SERIO(-4) Wiring: RS-232 7-31
H2-SERIO-4 Wiring: RS-422/485 7-32
F2-08SIM, Input Simulator 7-33
F2-08SIM Specifications 7-33

7

Specialty Modules Overview

There are several Specialty modules available for use in local and remote I/O bases. These modules are listed in the tables below and their specifications are found in this chapter. Each specialty module is identified with a White bar across the front panel as seen below. The module's front panel is also equipped with LED status indicators. Depending on the module, these indicators can show the network health, module health, I/O status or mode of operation the module is currently in.

Specialty Modules

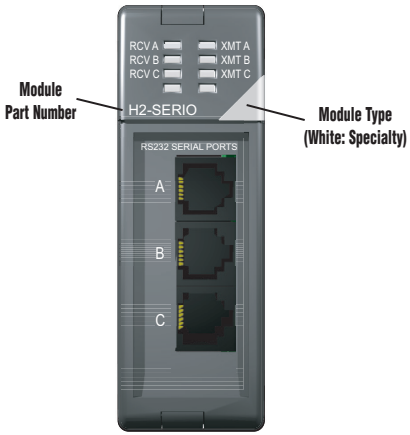

Specialty Modules		
Part Number	**Description**	**See Page**
H2-CTRIO2*	High Speed Counter Interface Module	7-5
H2-ECOM100	Ethernet Communications Module	7-14
H2-ERM100* ***H2-EBC100***	Ethernet Remote Master Module Ethernet Base Controller	7-22
H2-SERIO(-4)	Serial I/O Module	7-30
F2-08SIM	8-point Input Simulator Module	7-34

*** The H2-CTRIO and H2-ERM modules are discontinued.**

NOTE: *The H2-CTRIO module has been discontinued. The H2-CTRIO2 is the replacement module.*

Specialty Modules Overview - continued

Specialty Modules Supported			
Part Number	**Description**	**Part Number**	**Description**
H2-CTRIO*	High Speed Counter Interface Module	***H2-EBC****	10 Base-T Ethernet Base Controller
H2-CTRIO2	High Speed Counter Interface Module	***H2-EBC100***	100 Base-T Ethernet Base Controller
H2-ECOM*	10 Base-T Ethernet Communication Module	***H2-EBC-F***	10 Base-FL Ethernet Base Controller
H2-ECOM100	100 Base-T Ethernet Communication Module	***H2-SERIO***	Serial I/O Module
H2-ECOM-F	10 Base-FL Ethernet Communication Module	***H2-SERIO-4***	Serial I/O Module
H2-ERM(100)	10/100 Base-T Ethernet Remote Master Module	***F2-08SIM***	8-point Input Simulator Module
H2-ERM-F	10 Base-FL Ethernet Remote Master Module		

*** The H2-CTRIO, H2-ECOM and H2-EBC modules are discontinued but are still compatible with the new Do-more H2 Series PLC.**

Specialty Modules NOT Supported			
Part Number	**Description**	**Part Number**	**Description**
D2-CTRINT	Counter Interface Module	***D2-EM***	Expansion Base I/F Module
D2-DCM	Data Communication Module	***H2-PBC****	Profibus Base Controller
D2-RMSM*	Remote I/O Master Module	***F2-DEVNETS-1***	DeviceNet Base Controller
D2-CM	Expansion Base Controller	***F2-SDS-1***	Smart Distributed System Base Controller
F2-CP128	CoProcessor Module	***DV-1000***	DirectVIEW 1000 Timer/Counter access unit
D2-HPP	Handheld Programmer		

*** The D2-RMSM and H2-PBC modules are discontinued.**

H2-CTRIO(2)

H2-CTRIO(2) Overview

The H2-CTRIO(2) Counter I/O (CTRIO) module is designed to accept high-speed pulse input signals for counting or timing applications. This module also provides high-speed pulse output signals for servo/stepper motor control, monitoring and alarming as well as other discrete control functions.

The H2-CTRIO(2) module offers greater flexibility for applications which call for precise counting or timing based on input events or for high-speed control output applications. They can also be used for applications that call for a combination of both high-speed input and high-speed output control functions.

The H2-CTRIO(2) module has its own internal microprocessor and operates asynchronously with respect to the CPU. Therefore, the response time of the on-board outputs is based on the module scan time, not the CPU's scan time (unless the CPU is controlling the outputs directly).

H2-CTRIO2 Terminal Block Layout

NOTE: *The H2-CTRIO module has been discontinued. Please use the H2-CTRIO2 modules as the replacement. H2-CTRIO and H2-CTRIO modules have the same terminal block layout.*

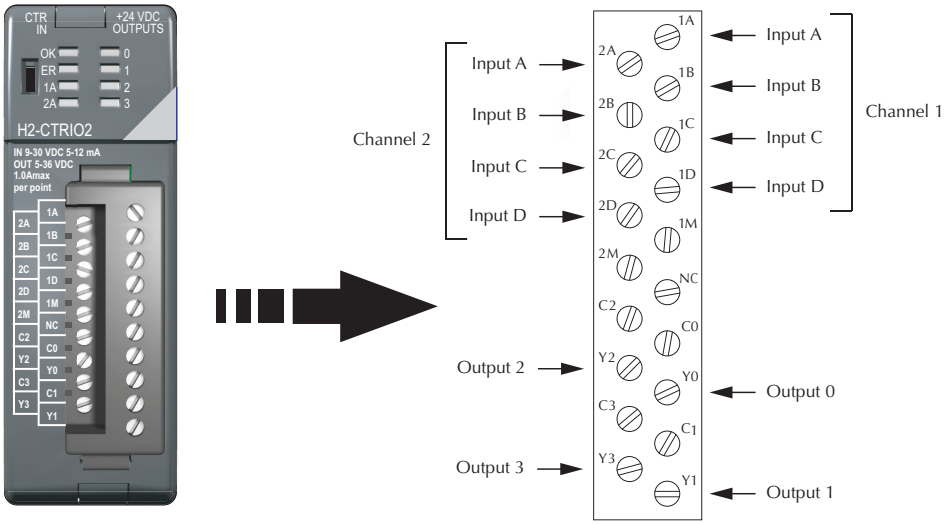

H2-CTRIO(2) Configuration

The module configuration of the H2-CTRIO2 is done from within the Edit CTRIO/CTRIO2 Configuration window seen below. The Configure I/O..., Input Filters..., Discrete Tables... and Pulse Profiles... buttons in the left hand column will allow you to configure the input and output functions of the selected module. Refer to the Do-more Designer Help File for more information on configuration options.

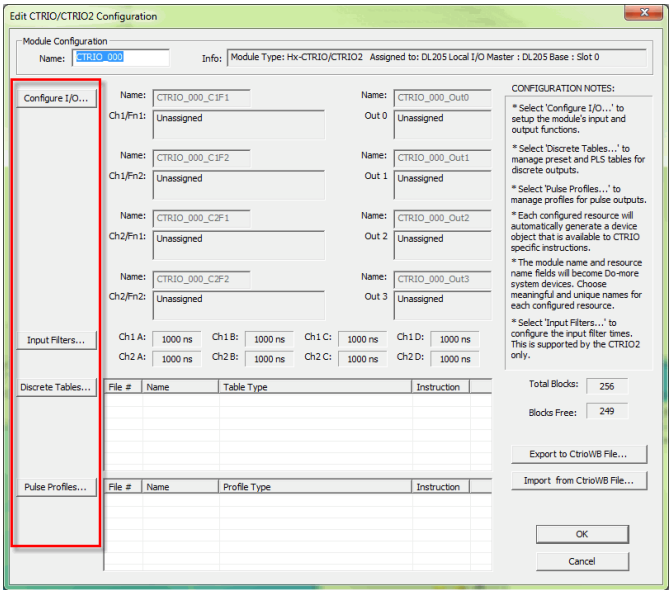

The above window can be accessed once the H2-CTRIO2 module is added to the I/O configuration either manually or automatically. See the Verify Hardware Configuration section of the Getting Started chapter for more information on setting up the I/O configuration. With the module added, select the Module Configuration(s) entry from the System Configuration page. Then choose the desired module and select Edit Config.

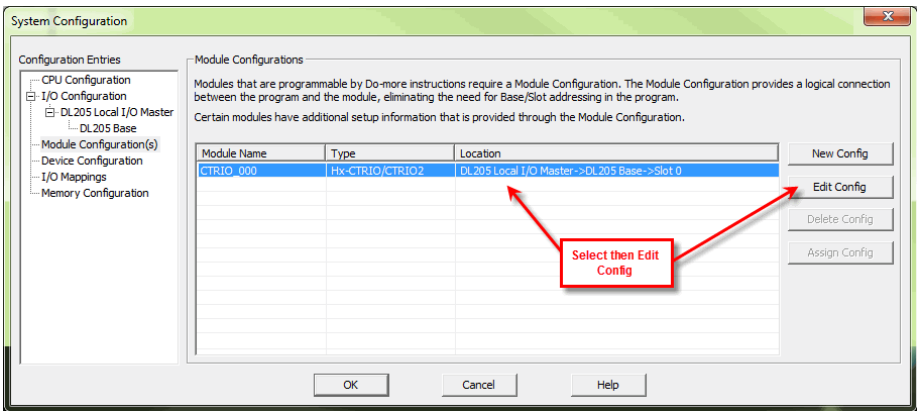

H2-CTRIO(2) Specifications

General Specifications		
Specifications	**H2-CTRIO***	**H2-CTRIO2**
Discrete I/O Points Used	None (I/O map directly in H2-DM1/E data structure)	
Base Power Required	400mA Max	275mA Max
Isolation	2500V I/O to Logic, 1000V among Input Channels and All Outputs	1500V I/O to Logic, 1000V among Input Channels and All Outputs

Input Specifications		
Specifications	**H2-CTRIO***	**H2-CTRIO2**
Inputs	8 pts sink/source	
Maximum Input Frequency	100kHz	250kHz
Minimum Pulse Width	5µsec	0.5 µs
Input Voltage Range	9–30 VDC	9–30 VDC
Maximum Voltage	30VDC	
Input Voltage Protection	Zener Clamped at 33VDC	
Rated Input Current	8mA typical 12mA maximum	
Minimum ON Voltage	9.0 VDC	
Maximum OFF Voltage	2.0 VDC	
Minimum ON Current	5.0 mA	
Maximum OFF Current	2.0 mA	
OFF to ON Response	less than 3µs	less than 0.5 µs
ON to OFF Response	less than 3µs	less than 0.5 µs

Output Specifications		
Specifications	**H2-CTRIO***	**H2-CTRIO2**
Outputs	4 pts (sink/source), independently isolated	
Pulse Outputs	2 channels, 20Hz to 25kHz Pulse/ Direction or CW/CCW	2 channels, 20Hz to 250kHz Pulse/ Direction or CW/CCW
Minimum Pulse Width	5µs	0.5 µs
Output Voltage Range	5–36 VDC	
Maximum Output Voltage	36VDC	
Maximum Load Current	1.0 A	1.0 A at 23°C 0.5 A at 60°C
Maximum Leakage Current	100µA	
Inrush Current	5.0 A for 20ms	2.0 A for 10ms
ON State V Drop	0.3 VDC or less	0.45 VDC or less
Overcurrent Protection	Yes	
OFF to ON Response	less than 3µs	less than 1µs
ON to OFF Response	less than 3µs	less than 1µs

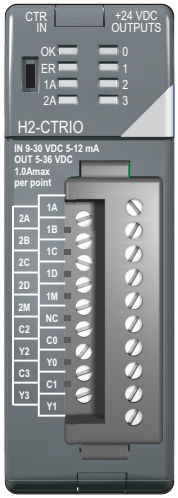

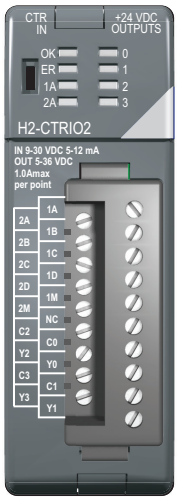

*** The H2-CTRIO module has been discontinued. The H2-CTRIO2 is the replacement.**

H2-CTRIO(2) LED Indicators

H2-CTRIO(2) LED Descriptions	
OK	Module OK
ER	User Program Error
1A	Channel 1 Status
2A	Channel 2 Status
0–3	Output Status

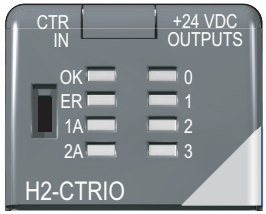

H2-CTRIO(2) LED Diagnostic Definitions		
LED OK	***LED ER***	***Description***
Blinking	Blinking	Boot Mode - Used for Field OS Upgrades
Blinking	OFF	Program Mode
OFF	Blinking	Module Self-Diagnostic Failure (Blinks may be coded by counts)
OFF	ON	Module Error Due to Watchdog Timeout
OFF	OFF	No Power to Module
ON	OFF	All is well - RUN Mode
ON	ON	Hardware Failure (H2-CTRIO)
		Not Used (H2-CTRIO2)

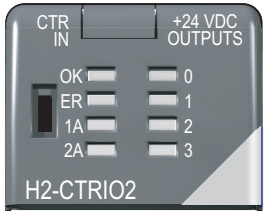

H2-CTRIO(2) LED Diagnostic Definition	
1A/2A	
Blinking 7 times per second	Input is configured as Counter and is changing
Following state of input	Input is not configured as counter
0-3	
Follow actual output state: ON = output is passing current	

H2-CTRIO(2) Jumper Setup

Jumpers are provided to connect input commons or outputs/output commons. Use of these jumpers is not necessary to set up the CTRIO(2) module. The jumpers are provided solely for convenience in wiring.

NOTE: *The location of the jumper board and pin assignments are different between the CTRIO and CTRIO2.*

H2-CTRIO(2) Jumper Functions		
H2-CTRIO	**H2-CTRIO2**	**Function**
1M-2M		Install jumper to internally connect the input commons 1M and 2M in order to reduce wiring if appropriate.
Y0-Y1		Install jumper(s) to internally connect Y0 to other Y terminals in order to reduce wiring if appropriate. Connect wire at Y0.
Y0-Y2		
Y0-Y3		
C0-C1		Install jumper(s) to internally connect C0 to other C terminals in order to reduce wiring if appropriate. Connect wire at C0.
C0-C2		
C0-C3		
	C3-C0	Install jumper(s) to internally connect C3 to other C terminals in order to reduce wiring if appropriate. Connect wire at C3.
	C3-C1	
	C3-C2	

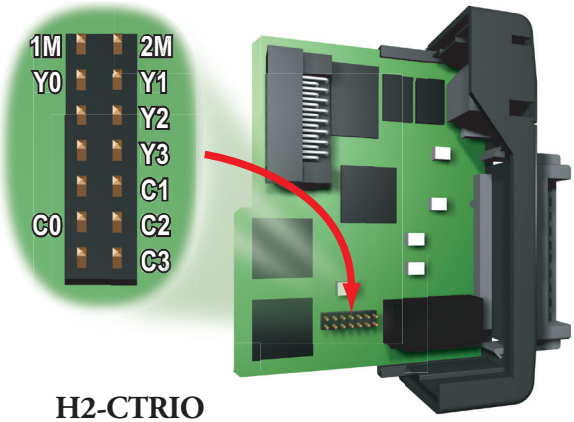

H2-CTRIO

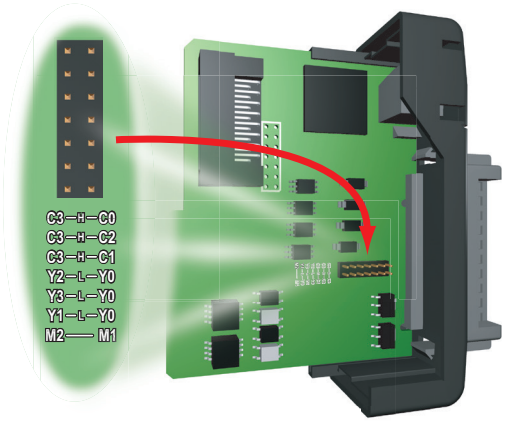

H2-CTRIO2

Wiring Information

The H2-CTRIO(2) module has two independent input channels, each consisting of four optically isolated input points (pts. 1A-1D on common 1M and pts. 2A-2D on common 2M). The inputs can be wired to either sink or source current.

The module has four optically isolated output points (Y0-Y3 with isolated commons C0-C3, respectively) that can be wired to either sink or source current. Remember that the internal jumpers can be used to connect the input commons or output commons together.

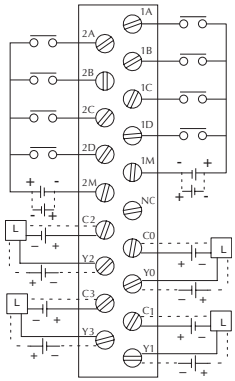

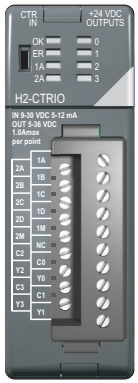

NOTE: *Field device wiring must be compatible with the module configuration configured in Do-more Designer*

7

DC type field devices are configured to either sink or source current. This affects the wiring of the device to the CTRIO module as seen below.

PNP Field Device (source)

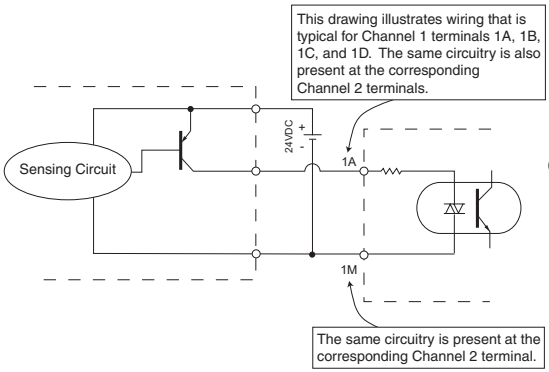

NPN Field Device (sink)

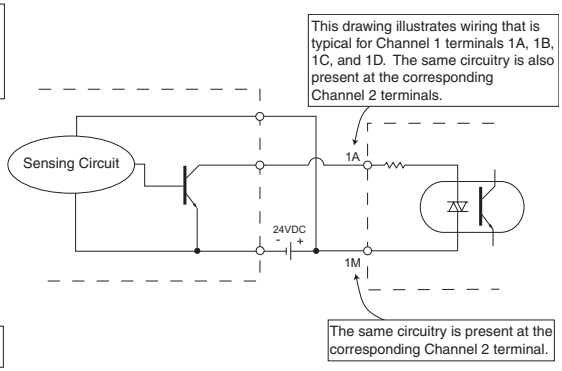

H2-CTRIO(2) Wiring Considerations

When wiring CTRIO(2) modules, please consider the following:

- Keep encoder input wiring as short as possible
- Route wiring to avoid any runs parallel to noisy cables.
- Route wiring to avoid the proximity of noisy devices.
- Use shielded, twisted pair cables, such as:

Suggested Cabling		
Type of Cable	***Supplier/Part Number***	***Supplier/Part Number***
3 pair, twisted, overall shield	AutomationDirect/L19853-XXXX	Belden/8103
1 pair, twisted, overall shield	AutomationDirect/L19827-XXXX	Belden/9841

H2-CTRIO(2) Input Wiring Examples

TTL Quadrature Encoder Field Wiring

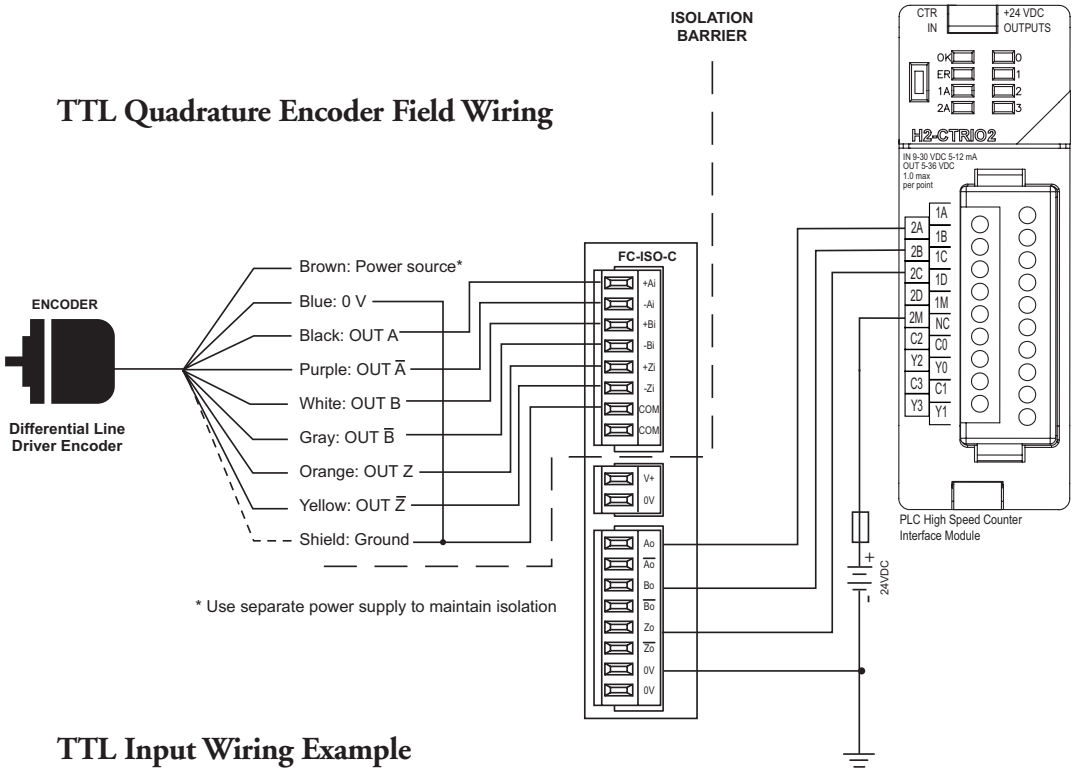

TTL Input Wiring Example

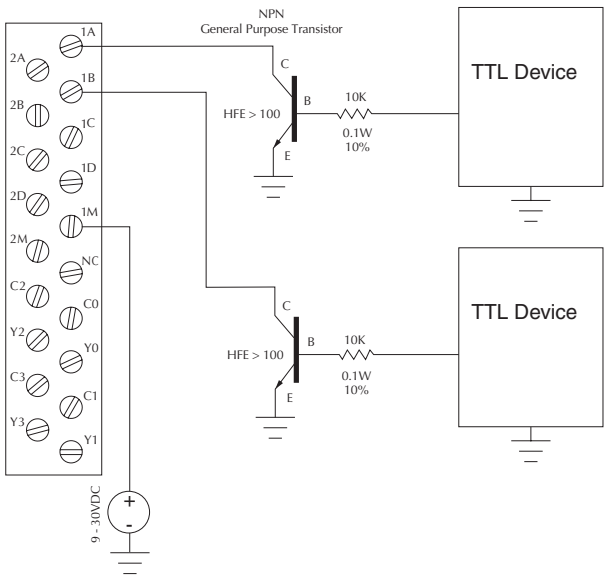

Quadrature Encoder Wiring Example

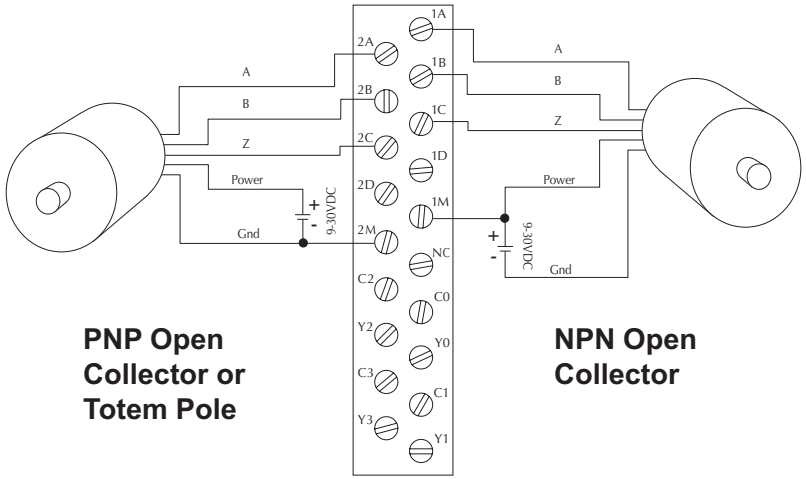

7

NPN Open Collector Device

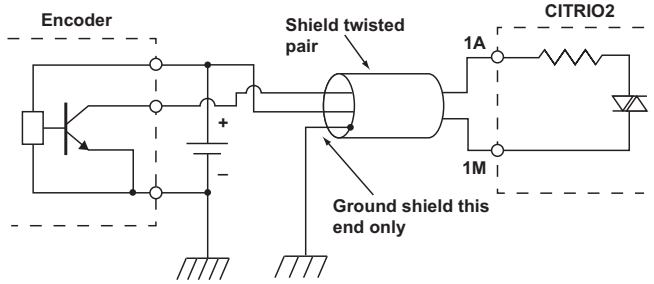

PNP Open Collector Device

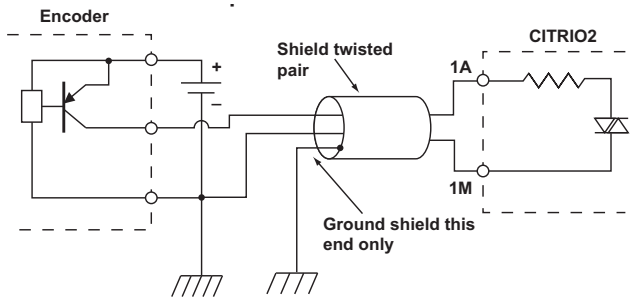

H2-CTRIO(2) Output Wiring Examples

The four outputs are individually isolated so each output can be used to break the high or the low side of a DC load seperately

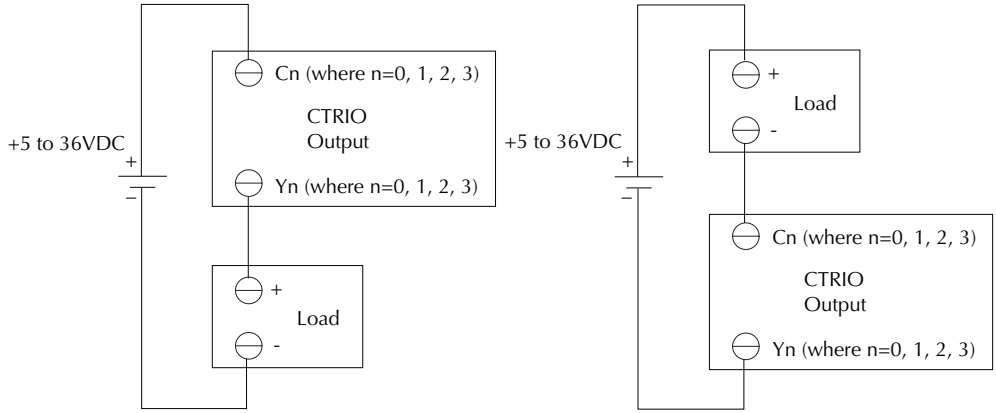

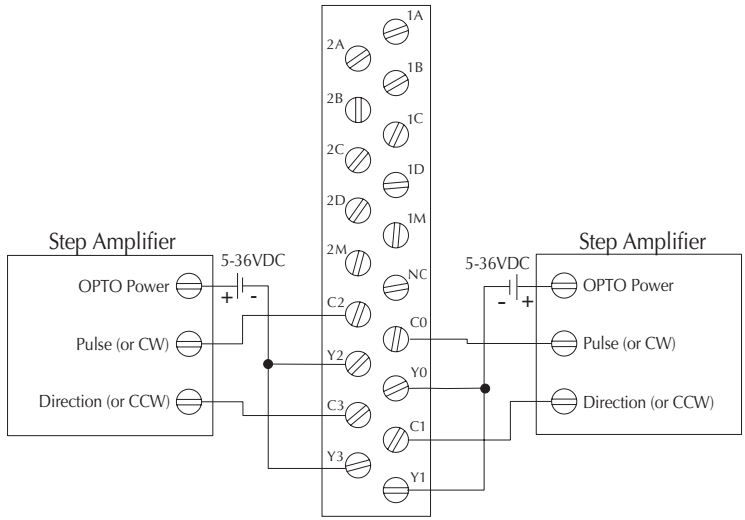

WARNING: The above example assumes that the Step Amplifier interface is made up of optocoupler LEDs (common anodes at the "OPTO Power" terminal) with internal current limiting resistors. This is a standard method, but you must consult your step amplifier documentation to ensure that this method is applicable.

H2-ECOM100

H2-ECOM100 Overview

The H2-ECOM100 Ethernet Communication (ECOM) module provides high-speed Ethernet connections for the Do-more PLC. These modules are easy to set up and install on 10/100BaseT (twisted pair, copper wire) Ethernet networks.

LEDs on the face of each module give vital information about the status of the module and the communications link. The 10/100BaseT modules use standard RJ45 modular connectors.

You can use the ECOM modules to share data between two or more Do-more PLCs or between Do-more PLCs and personal computers. The H2- ECOM100 additionally allows client/server communications with other Ethernet devices using the MODBUS TCP/IP protocol. Communication between PLCs and MODBUS TCP/IP devices is accomplished by using the MRX/MWX instructions.

You can use a personal computer equipped with a 10/100BaseT network adapter card and NetEdit3 software to configure the ECOM module over the network. Once configured, the H2-ECOM100 module allows you to program your Do-more PLC over the Ethernet network using the Do-more Designer programming software. The NetEdit3 utility installs with the Do-more Designer software and can be very useful for troubleshooting certain communication problems.

NOTE: *We recommend using a dedicated network for your PLC control applications.*

H2-ECOM100 Specifications

H2-ECOM100 Ethernet Communications Module	
Specifications	**H2-ECOM100**
Communications	10/100Base-T Ethernet
Data Transfer Rate	100 Mbps max.
Link Distance	100m (328ft)
Ethernet Port	RJ45
Ethernet Protocols	TCP/IP, IPX, Modbus TCP, DHCP, HTML configuration
Power Consumption	300mA @ 5VDC

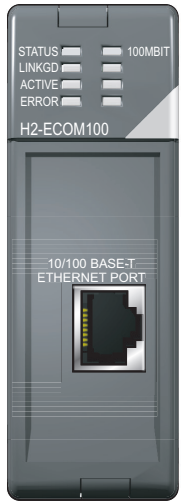

H2-ECOM100 LED Indicators

H2-ECOM100 LED Descriptions		
Indicator	**Status**	**Description**
STATUS	ON (Green)	Module is powered up and functional
	OFF	Module powerup failed
LINKGD	ON (Green)	Properly connected to network
	OFF	Not connected to network or incorrect configuration
ACTIVE	ON or FLASHING (Red)	Active Network Data
	OFF	Network Idle
ERROR	ON or FLASHING (Red)	A fatal error has occurred
	OFF	No error present
100MBIT	ON	100Base T Frequency detected
	OFF	(With ACTIVE LED ON) - 10Base T Frequency detected

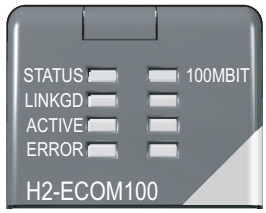

H2-ECOM100 Network Identifiers

Each module must be assigned at least one unique identifier to make it possible for other devices to recognize it on the network. There are four identifiers possible with the ECOM modules:

- Module ID
- Name
- IP (Internet Protocol) Address
- Ethernet (MAC) Address

The first three are user selectable but the MAC address is set at the factory. The type of identifier chosen depends on the requirements of your particular application. PC-to-PLC communication typically uses one type of identifier while PLC-to-PLC communication may require another. The following table summarizes Network Identifiers and their uses:

Network Identifiers				
Identifier	**How to Set**	**Format**	**Communication**	**Notes**
Module ID	DIP Switch	Number 1–63	PLC-to-PLC or PC-to-PLC	Disables Module ID in NetEdit3
	NetEdit3	Number 1–90	PLC-to-PLC or PC-to-PLC	DIP Switch must be set to "0"
	NetEdit3	Number 1–999,999,999	PC-to-PLC only	>90 (Not for PLC-to-PLC)
Name	NetEdit3	32 Alphanumeric Characters	PC-to-PLC only	HMI software may have restrictions
IP Address	NetEdit3	4 sets of numbers, up to three digits each (192.168.76.3)	PC-to-PLC, (PLC-to-PLC Client/Server using TCP/IP or Modbus TCP protocols)	See your Network Administrator for IP addresses
Ethernet (MAC) Address	Set at Factory	12 Hex digits	PC-to-PLC only	Factory assigned for IPX

Module ID

A Module ID is required for PLC-to-PLC communication and it can be set in two ways:

- Using the DIP switches on the module
- Using the configuration tools in NetEdit3
- HTML configuration (after IP address is assigned to module using NetEdit3)

Use the DIP switches if you want the ability to install or change modules without having to use a PC to set the Module ID. Set the module's DIP switches, install the module in the base and apply power. The Module ID will be accepted on powerup and your ECOM will be ready to communicate.

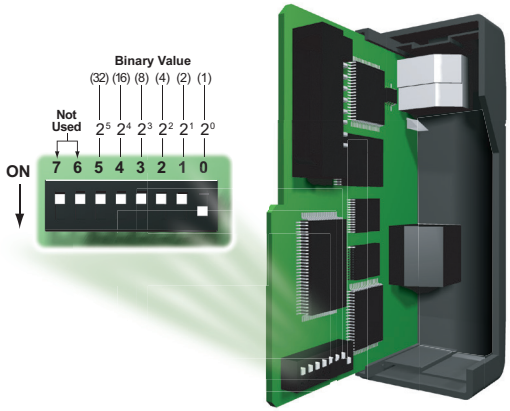

Name

A Name makes it easy to recognize the PLC by its function. An example of a Name is "PumpStationOne", as seen in the diagram below. The Name can be up to 32 alphanumeric characters in length.

NOTE: *Some HMI software products will not accept Names with numbers as the first character, spaces or certain other non-alphanumeric ASCII characters. Also, your HMI product may not accept Names longer than 16 characters. Consult your HMI product documentation about its naming conventions.*

IP Address

An IP Address can be assigned to the ECOM module if your network requires one. Usually, the IP Address is required in cases where PLCs are sharing the same network with PCs, and some of the PCs are carrying out functions unrelated to PLC control. Normally, a network administrator will assign an IP Address to each device on the network. Use NetEdit3 to configure the assigned IP address to the ECOM.

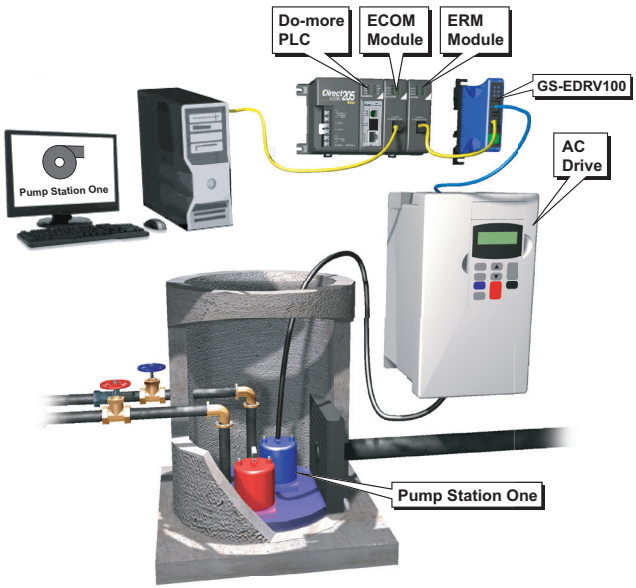

NOTE: *You must use an IP address if you are using the UDP/IP or Modbus TCP protocol.*

The module ships from the factory with an IP Address of 0.0.0.0. This is not a usable IP Address for normal communication. It only serves as a default setting which can be changed using NetEdit3. The valid setting for each field is 1 through 254. You do not have to change the default IP Address unless you are using the IP Address to link to your ECOM module. The default setting does not cause conflicts with other network communications. If you change the default IP Address for linking to other network devices, you must change all four "0" fields.

Example IP Addresses - If the Client (PC/ECOM) Subnet Mask is 255.255.0.0 and the Client has an IP Address of 192.168.50.2, then the following are valid Server IP Addresses:

- 192.168.**55.5** - Valid Server ECOM IP Address
- 192.168.**70.15** - Valid Server ECOM IP Address

The subnet mask determines which fields must match by assigning a 255 to that field. In the example above, the first two fields are masked with a 255, therefore valid Server IP Addresses must match the first two fields of the Client IP or 192.168. The last two fields are allowed to vary because they are masked with a "0".

WARNING: It is extremely important not to have duplicate IP Addresses on your network. If you are using the IP Address to link the ECOM to any network devices (PCs or PLCs), the ECOM must have a unique number.

Ethernet (MAC) Address

A unique Ethernet (MAC) Address is assigned to each module at the factory and will not change. It is printed on a label attached to each ECOM module. The Ethernet (MAC) Address is recognized by NetEdit3. The Ethernet (MAC) Address is a twelve digit number with no deliberate relationship to your network or functional areas of your plant. Typically, the MAC address is not a convenient and easily remembered identifier for your ECOM module.

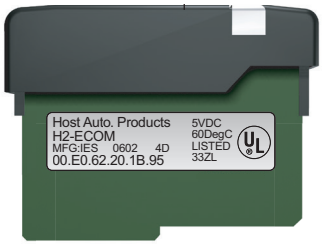

Using Multiple Network Identifiers

You can use IP Addresses to satisfy network requirements, the Name identifier for PCs running HMI software and Module IDs for PLCs to share data among themselves. Using one type of identifier does not limit your use of the other identifier types.

H2-ECOM100 Network Layouts

The ECOM Ethernet network is a peer-to-peer network. Using Read (RX) or Write (WX) instructions, any PLC on the network can initiate communications with any other PLC on the network. A PC running our KEPDirect software can also initiate communications with any ECOM that is on the same network, but a PLC cannot initiate communication with the PC. An ECOM can sequence through communication connections with each PLC on the network, one at a time.

The ECOM products inherently support two network layouts: point-to-point and star. The point-to-point layout can be used to link together two PLCs or a PC and a PLC. A switch connects multiple networkable devices into a star topology. Multiple switches are used to modify the star topology so that it becomes a star-bus-star topology. See the figures below

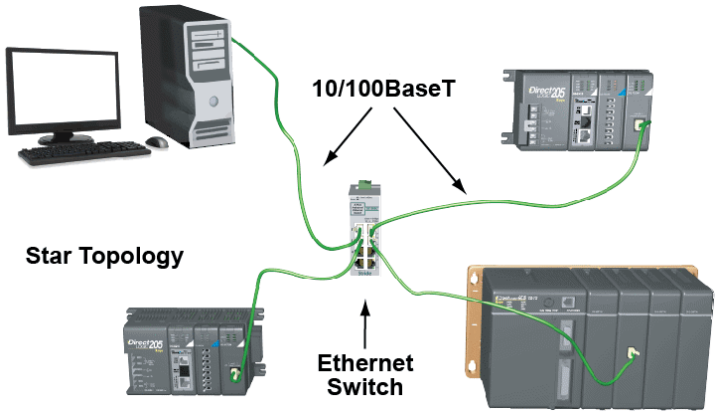

Switches can connect together to make it possible to connect more devices to the network or to extend the range of the network.

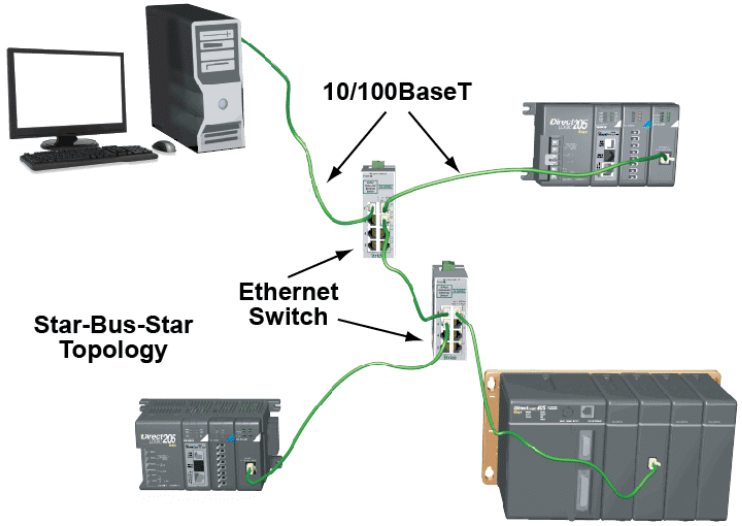

H2-ECOM100 Network Cabling

The H2-ECOM100 module supports 10/100BaseT standard cabling consisting of copper wire twisted pairs.

10/100BaseT Unshielded Twisted-Pair cable with RJ45 connectors

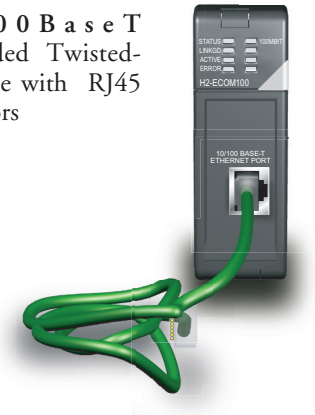

10/100 BaseT Networks

The cable used to connect a PLC (or PC) to an Ethernet switch is called a patch (straight-through) cable. The cable used to connect together two PLCs, a PC and a PLC, or two switches is a crossover cable. We recommend that you purchase cables pre-assembled with connectors for convenient and reliable networking.

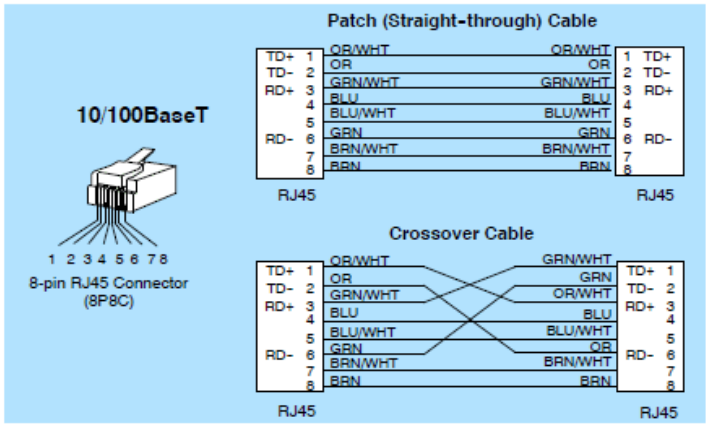

NOTE: *The above diagram illustrates the standard wire positions in the RJ45 connector. We recommend all ECOM 10/100BaseT cables to be Category 5, UTP cable.*

Cable Lengths

The maximum distance per 10/100BaseT cable segment is 100 meters or 328 feet. Switches allow multiple 100 meter cable segments to be joined together increasing the allowable distance. For example, two switches connected together adds an additional 200 meters to the system, for a total range of 300 meters.

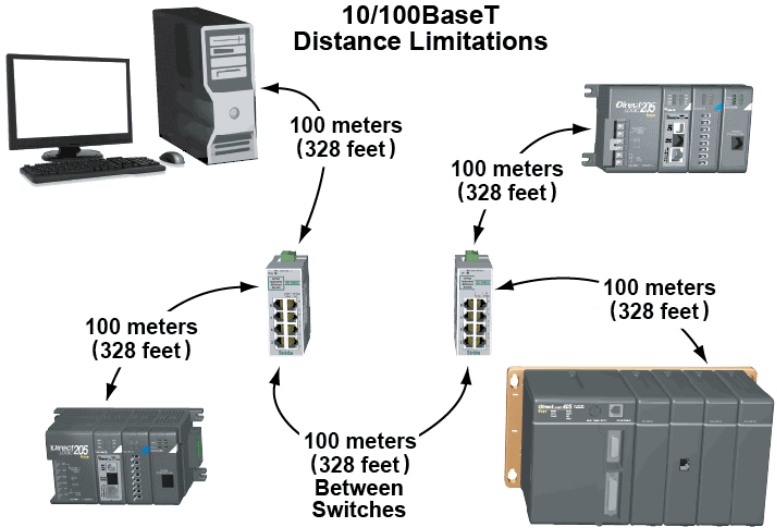

Maximum Number of ECOM Modules on the Network

The maximum number of nodes that can be connected to a 10/100BaseT network is a function of the topology used in constructing the network. Therefore, it is not possible to state an absolute maximum number of nodes that would apply in all cases.

The IEEE 802.3 specification defines the maximum node limit for an Ethernet segment in terms of the ability to detect and avoid data collisions. A "legal" network can have any number of devices provided that they can:

- Detect all data collisions that may occur during the communication process and
- Respond to these collisions appropriately.

You must take into consideration the network limitations imposed by all cabling and network devices. Consider the limitations imposed on your network if your network uses:

- A combination of cabling standards, such as 10/100 BaseT and 10Base2, or
- Intermediate devices, such as switches or routers.

Each ECOM module can be assigned a Module ID ranging from 1 to 999,999,999. Theoretically, you could have this many Ethernet modules coexisting on a single network. Other network limitations would restrict the network size before reaching this limit. For the majority of network PLC applications there is practically no limit to the number of ECOM modules you can access from the NetEdit3 or Do-more Designer software. There is a node limit for PLC-to-PLC communications. The network Read and Write instructions performed by the initiating (master) PLC are only capable of accessing PLCs with Module IDs of 1 through 90. This effectively sets the maximum number of nodes available for PLC-to-PLC communications at 90.

WARNING: We recommend against connecting Ethernet modules to the same network that serves as your primary office network. While Ethernet networks can handle a very large number of data transmissions, and normally handle them very quickly, heavy Ethernet traffic can adversely affect the reliability and speed of the network.

H2-ERM(100)/ H2-EBC100*

NOTE: *The H2-ERM module has been discontinued. The H2-ERM100 is the replacement module.*

H2-ERM(100) Overview

Expanding I/O beyond the local chassis is useful for a system which has a sufficient number of sensors and other field devices located a relatively long distance from the CPU. The Ethernet Remote Master H2-ERM(100) connects Do-more CPU systems to slave I/O over a high-speed Ethernet link.

Each ERM module can support up to 16 H2-EBC systems, 16 Terminator I/O EBC systems, or 16 fully expanded H4-EBC systems. Of course, combinations are fine, too.

NOTE: *Applications requiring an extremely large number of T1H-EBC analog I/O or H4-EBC 16-channel analog I/O, could exceed the buffer capacity of a single H2-ERM(100) module. In these cases, an additional H2-ERM(100) may be required.*

7

The ERM connects to your control network using Category 5 UTP cables for cable runs up to 100 meters (328ft). Use Ethernet switches to extend distances and expand the number of nodes.

The PLC, ERM and EBC slave modules work together to update the remote I/O points. These three scan cycles are occurring at the same time, but asynchronously. Critical I/O points that must be monitored every scan are best placed in the CPU base.

It is highly recommended that a dedicated Ethernet remote I/O network be used for the ERM and its slaves. While Ethernet networks can handle a large number of data transactions, and normally handle them very quickly, heavy Ethernet traffic can adversely affect the reliability of the slave I/O and the speed of the I/O network. Ensure ERM networks, multiple ERM networks and ECOM/office networks are isolated from one another.

H2-ERM(100) Specifications

H2-ERM(100) Ethernet Remote I/O Master Module		
Specifications	**H2-ERM**	**H2-ERM100**
Module Type	Ethernet Communications Master Module	
Slaves per ERM	16 Max	
Communications	10BaseT Ethernet	10/100BaseT Ethernet
Data Transfer Rate	10Mbps	100Mbps
Ethernet Port	RJ45	
Power Consumption	320mA @5VDC	300mA @5VDC
Operating Environment	0ºC to 60ºC (32ºF to 140ºF), 35% to 95% humidity (non-condensing)	
Link Distance	100m (328ft)	
Ethernet Protocols	TCP/IP, IPX	TCP/IP, IPX Modbus TCP/IP, DHCP, HTML configuration

H2-ERM(100) LED Indicators

H2-ERM(100) LED Descriptions		
Indicator	**Status**	**Description**
LINKGD	ON	Communications Link OK
ACTIVE	ON	Network Active
	OFF	Network Idle
ERROR	ON or Flashing	Fatal Error Detected

H2-EBC100 Overview

The Ethernet Base Controller (EBC) serves as an interface between the master control system and remote I/O modules. The control function is performed by the master controller, not the EBC slave. The EBC occupies the CPU slot in the base and communicates across the backplane to input and output modules. The function of the EBC is to:

- Process analog and digital input signals
- Format the I/O signals to conform to the Ethernet standard
- Transmit input signals to the network master
- Receive and translate output signals from the network master
- Distribute the output signals to the appropriate output module in the base

The H2-EBC100 module supports industry standard 10/100BaseT Ethernet and Ethernet/IP communications.

NOTE: *The RS-232 serial port on the EBC module cannot be used when the EBC module is part of the Do-more controller system.*

H2-EBC100 Specifications

Specifications	H2-EBC100
Communications	10/100BaseT Ethernet
Data Transfer Rate	100Mbps max.
Link Distance	100 meters (328ft)
Ethernet Port	RJ45
Ethernet Protocols	Ethernet/IP, TCP/IP, IPX/Modbus TCP/IP, DHCP, HTML configuration
Serial Port*	RJ12
Serial Protocols	K-Sequence, ASCII IN/OUT, Modbus RTU
Power Consumption	300mA @ 5VDC

*** The serial port on the EBC modules cannot be used when the H2-DM1/E is the network master.**

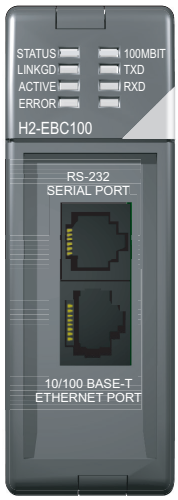

H2-EBC100 LED Indicators

H2-EBC100 LED Descriptions		
Indicator	**Status**	**Description**
STATUS	ON (Green)	Module is powered up and functional
	OFF	Module powerup failed
LINKGD	ON (Green)	Properly connected to network
	OFF	Not connected to network or incorrect configuration
ACTIVE	ON or FLASHING (Red)	Active Network Data
	OFF	Network Idle
ERROR	ON or FLASHING (Red)	A fatal error has occurred
	OFF	No error present
100MBIT	ON	100Base T Frequency detected
	OFF	(With ACTIVE LED ON) - 10Base T Frequency detected
TXD	FLASHING (green)	Serial port is transmitting data
RXD	FLASHING (green)	Serial port is receiving data

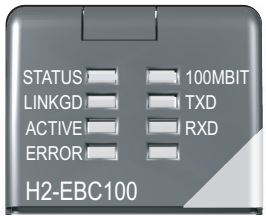

7

H2-ERM(100)/H2-EBC100 Network Identifiers

Each module must be assigned at least one unique identifier to make it possible for other devices to recognize it on the network. There are three identifiers possible with the ERM/EBC modules:

- Module ID
- IP (Internet Protocol) Address
- Ethernet (MAC) Address

The first two are user selectable but the MAC address is set at the factory. The identifiers are used to link the ERM module to its remote EBC slaves. The type of identifier chosen depends on the protocol requirements of your particular application. The following table summarizes Network Identifiers and their uses:

Network Identifiers				
Identifier	**Protocol**	**How to Set**	**Format**	**Notes**
Module ID	IPX	DIP Switch	Slave Number 1-63, Set ERM to 0	Module ID can be changed without NetEdit3. When set, disables Module ID selection in NetEdit3
		NetEdit3	Slave Number 1-65535, Set ERM to 0	DIP Switch must be set to "0"
IP Address	UDP/IP	NetEdit3	4 sets of numbers, up to three digits each (192.168.76.3)	See your Network Administrator for IP addresses
Ethernet (MAC) Address	IPX	Set at Factory	12 Hex digits	Factory assigned for IPX

Module ID

Always set the ERM module ID to 0. A slave EBC Module ID can be set in one of two ways:

- Use the DIP switches on the module (1-63).
- Use the configuration tools in NetEdit3 (1-65535).

Set the Module ID using the DIP switches if you wish to be able to install and change slave modules without using a PC. The Module ID equals the *sum* of the binary values of the slide switches set in the ON position. For example, if slide switches 1, 2 and 3 are set to the ON position, the Module ID will be 14. This is found by adding 8+4+2=14. The maximum value which can be set on the DIP switch is 32+16+8+4+2=63. This is achieved by setting switches 0 through 5 to the ON position. The 6 and 7 switch positions are inactive.

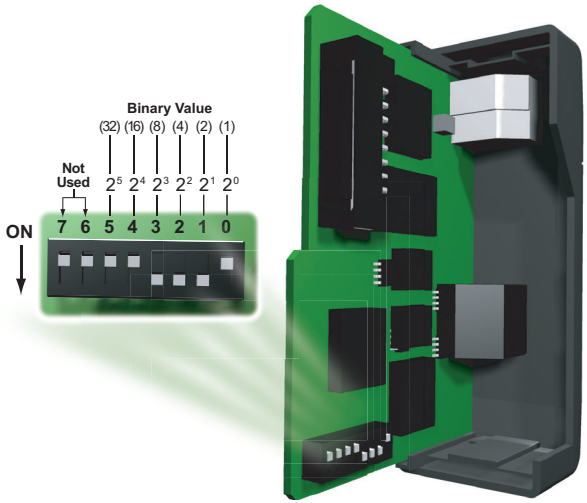

H2-ERM(100)/H2-EBC Module

H2-ERM(100)/H2-EBC Module DIP Switch Location

Set the module's DIP switch, insert the module in the base, and connect the network cable. The Module ID is set on powerup, and it is ready to communicate on the network.

The Module IDs can also be set or changed on the network from a single PC by using the tools in NetEdit3.

IP Address

An IP Address can be assigned to the ERM module or its slaves if your network requires one. Normally, a network administrator will assign an IP Address to each device on the network. Since it is recommended to use a separate dedicated network for your ERM , you do not have to use the IP Address, unless you are using the UDP/IP protocol. Use the Module ID or Ethernet Address for each module when using the IPX protocol. You can use NetEdit3 within the ERM Workbench utility to give the ERM or its slave modules an IP Address. Each ERM and slave must have a unique IP Address.

The module ships from the factory with an IP Address of 255.255.255.255. This is not a usable IP Address for normal communications. It only serves as a default setting which can be changed using NetEdit3. The valid settings are 0 through 254. You do not have to change the default IP Address unless you are using IP Address protocol. The default setting does not cause conflicts with other network communications. If you change the default IP Address for linking to other network devices, you must change all four "255" fields. If any field contains the number 255 and other fields have been changed, the module will not be recognized on the network.

Example IP Addresses

- 192.168.55.5 - Valid IP Address
- 255.168.55.5 - Not Valid

WARNING: It is extremely important not to have duplicate IP Addresses on your network. If you are using the IP Address, all modules must have a unique number.

Ethernet (MAC) Address

A unique Ethernet (MAC) Address is assigned to each module at the factory and will not change. It is printed on a label attached to each ERM/EBC module. The Ethernet (MAC) Address is recognized by NetEdit3. The Ethernet (MAC) Address is a twelve digit number with no deliberate relationship to your network or functional areas of your plant. Typically, the MAC address is not a convenient and easily remembered identifier for your ERM/EBC module.

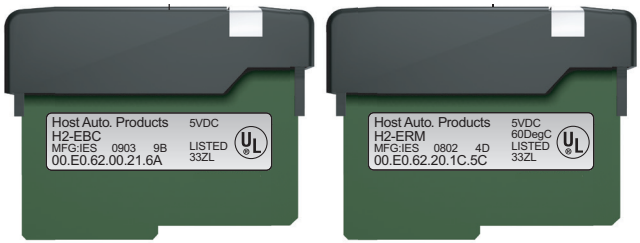

Using Multiple Network Identifiers

You can use IP Addresses to satisfy network requirements and Module IDs for PLCs to share data among themselves. Using one type of identifier does not limit your use of the other identifier types.

H2-ERM(100)/H2-EBC100 Network Layouts

Each ERM module can support up to 16 remote slaves. The slaves supported are the H4–EBC, H2–EBC, T1H–EBC, GS–EDRV100 and HA–EDRV2. Use a PC equipped with a 10/100BaseT network adapter card and the Ethernet Remote Master (ERM) Workbench software configuration utility to configure the ERM module and its slaves over the Ethernet remote I/O network. Once the ERM I/O network is configured and running, the PC can be removed from the network.

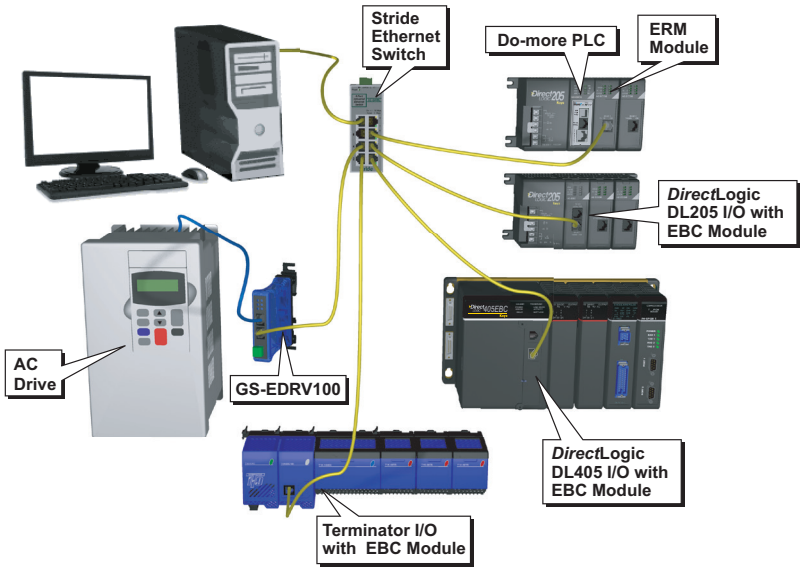

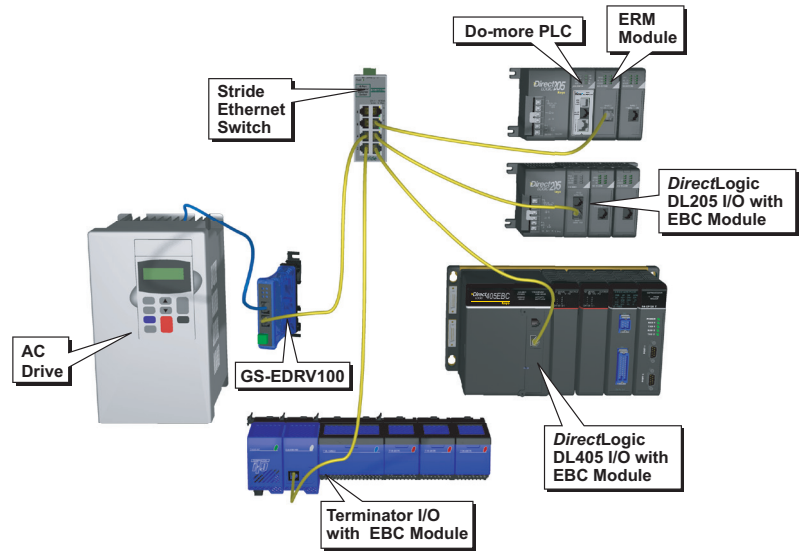

H2-ERM(100)/H2-EBC100 Network Cabling

The ERM/EBC modules support 10/100BaseT standard cabling consisting of copper wire twisted pairs.

10/100BaseT
Unshielded Twisted-Pair cable with RJ45 connectors

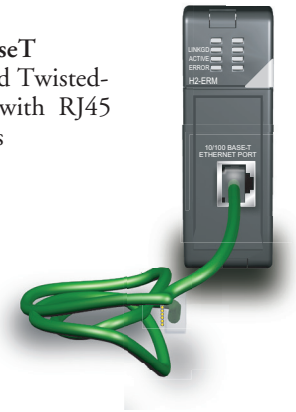

10/100 BaseT Networks

The cable used to connect a PLC (or PC) to an Ethernet switch is called a patch (straight-through) cable. The cable used to connect together two PLCs, a PC and a PLC, or two switches is a crossover cable. We recommend that you purchase cables pre-assembled with connectors for convenient and reliable networking.

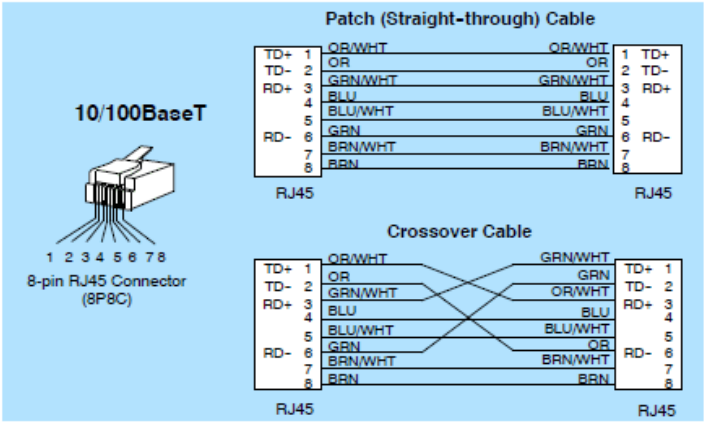

NOTE: *The above diagram illustrates the standard wire positions in the RJ45 connector. We recommend all ECOM 10/100BaseT cables to be Category 5, UTP cable.*

Cable Lengths

The maximum distance per 10/100BaseT cable segment is 100 meters or 328 feet. Switches allow multiple 100 meter cable segments to be joined together increasing the allowable distance. For example, two switches connected together adds an additional 200 meters to the system, for a total range of 300 meters.

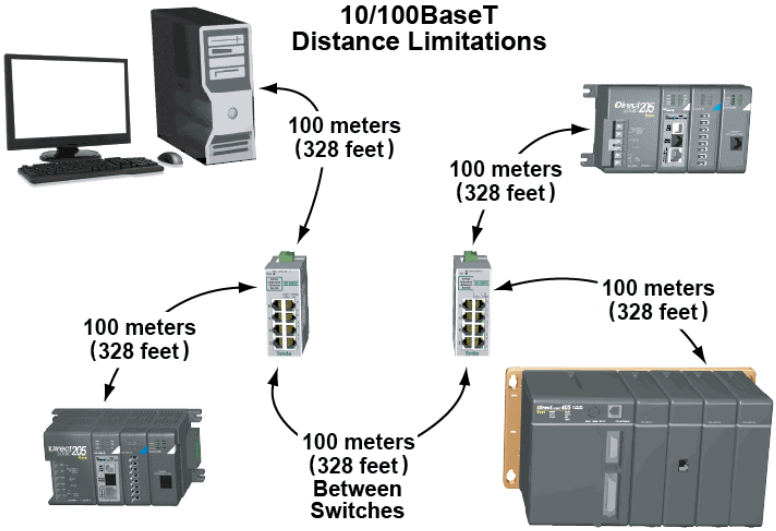

H2-SERIO(-4)

H2-SERIO(-4) Overview

With the H2-SERIO, three additional RS-232 ports can be added to your Do-more system. On the other hand, the H2-SERIO-4 can give you two additional RS-232 ports and one RS-485 or RS-422 port. As many as eight of these modules may be added to the local base, adding up to 24 serial ports (there is no means of using these modules in Ethernet remote bases).

The serial ports of the H2-SERIO(-4) support the following functions which can be selected in the Module Configuration of the Do-more software (as seen below):

- Do-more Programming - Select this option to setup the port to work with the Do-more Designer programming software.
- K Sequence - Select this option to have the port respond to client devices running K Sequence protocol.
- Modbus RTU Server - Select this option to have the port respond to client devices running Modbus/RTU protocol.
- Modbus RTU Client - Select this option to make the port available for use by the Do-more controller's Modbus Network Read (MRX) and Modbus Network Write (MWX) instructions.
- General Purpose - Select this option to make the port available for use by the Do-more controller's Input String from Device (STREAMIN) and Output String to Device (STREAMOUT) instructions.

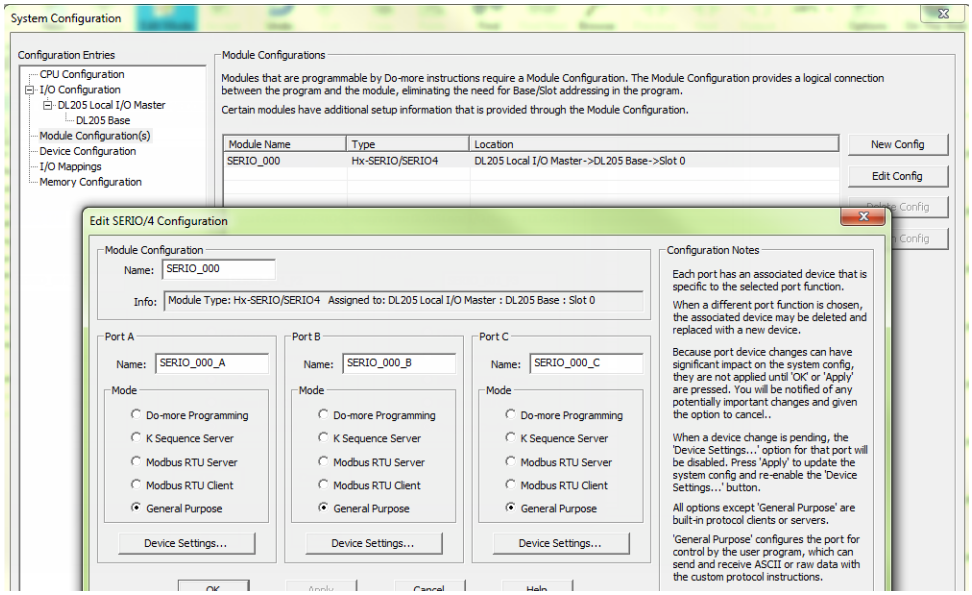

Baud rates, parity and communication bit settings are accessible by selecting the Device Settings... button located below the General Purpose selection or through the Device Configuration section of the System Configuration window. Baud rates up to 115,200 are supported.

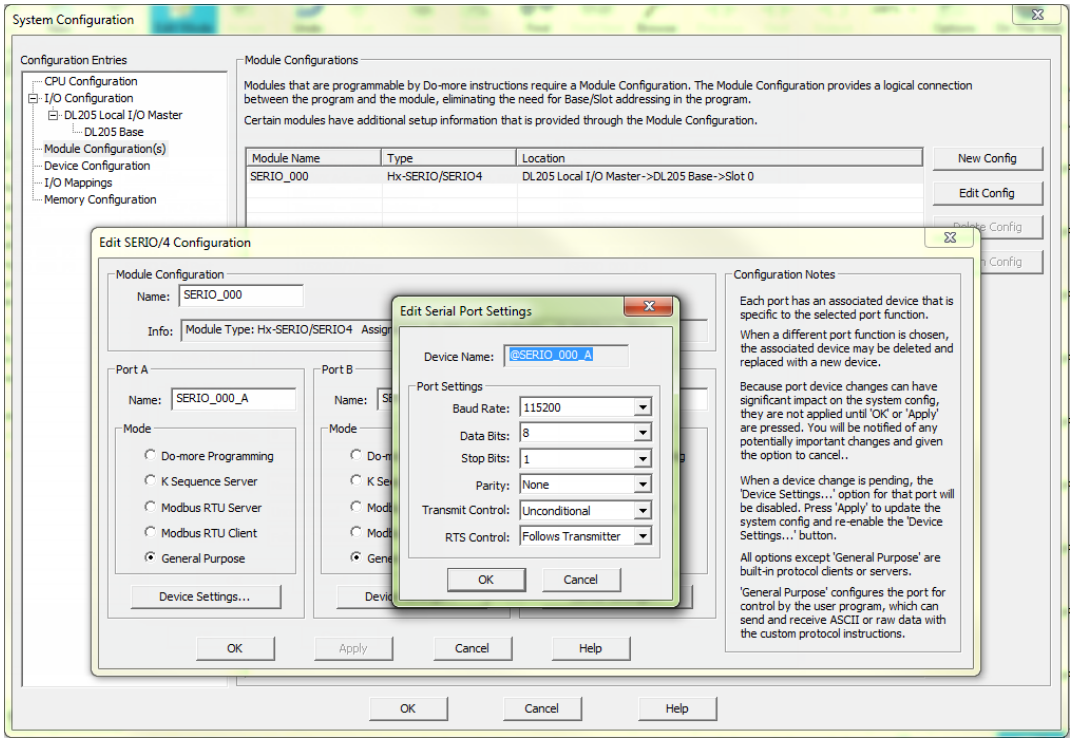

These parameters can also be set programmatically using the SETUPSER instruction seen here. See the Do-more Help file for more information on communication instructions.

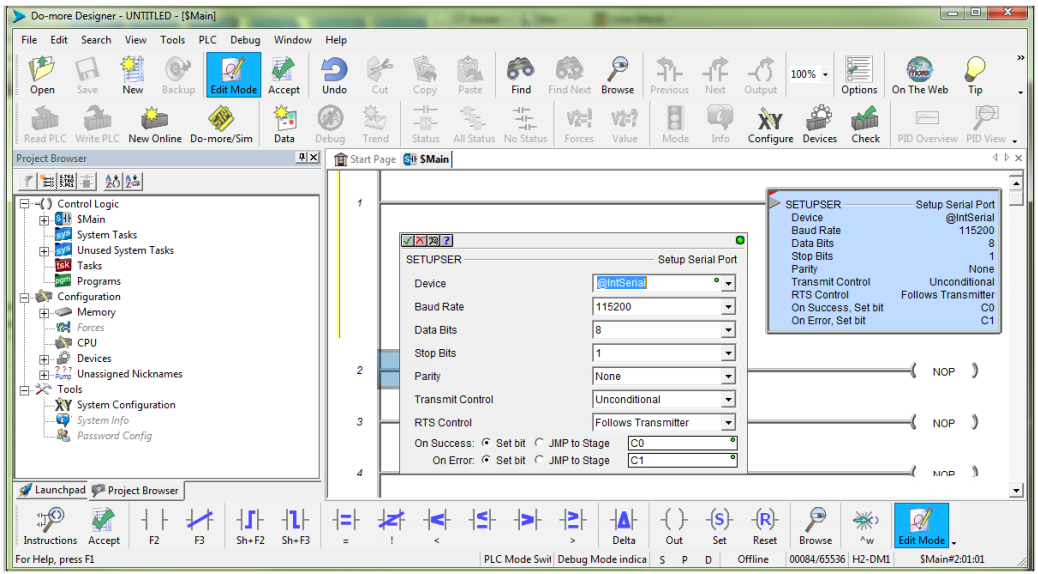

H2-SERIO(-4) Specifications

H2-SERIO / H2-SERIO-4 Serial Communications Module		
Specifications	**H2-SERIO**	**H2-SERIO-4**
Module Type	Intelligent	
Approvals	cUL Listed, file number E185989	
Number of Serial Ports per Module	3 ports: all RS-232 (RJ12 jack)	3 ports: 2 RS-232 ports (RJ12 jack) and 1 RS-422/485 (5 position terminal strip)
Signals	RS-232: CTS, RXD, TXD RTS, GND RTS transmission delay times: 5, 50, 250 and 500ms	RS-232: CTS, RXD, TXD RTS, GND RTS transmission delay times: 5, 50, 250 and 500ms
		RS-422 (4 wire) : TX+, TX-, RX-, RX+, GND RS-485 (2 wire): Data+, Data-, GND
Number of Modules Supported per Do-more PLC	8	
Recommended Cables	RS-232: ZL-RJ12CBL-2	RS-232: ZL-RJ12CBL-2 RS-422: ADC L19853-x (Belden 8103) RS-485: ADC L19954-x (Belden 9842)
Protocols Supported	Serial ASCII (full-duplex), K Sequence, Modbus/RTU and Do-more programming	
Power Consumption	80mA @ 5VDC	
Baud Rates	1200, 2400, 4800, 9600, 19200, 38400, 57600, 115200	
Parity	None, odd, even	
Start and Stop Bits	1, 2	
Operating Environment	0 to 60°C (32°F to 140°F), 5% to 95% RH (non-condensing); No corrosive gases, Pollution level 2; Vibration: MIL STD 810C 514.2; Shock: MIL STD 810C 516.2	
Storage Temperature	-20 to 70°C (-4°F to 158°F)	

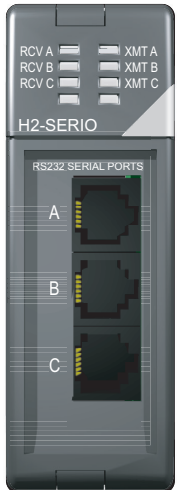

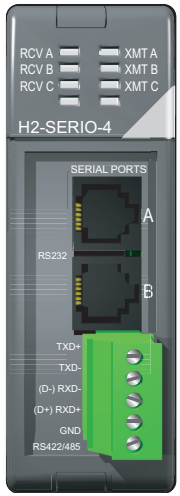

H2-SERIO(-4) Wiring: RS-232

RS-232

6 pin RJ12 Phone Type Jack – both por

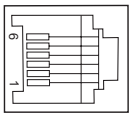

H2-SERIO(-4) RS-232 Pin Descriptions		
1	0V	Power (-) connection (GND)
2	CTS	Clear to Send
3	RXD	Receive data (RS-232)
4	TXD	Transmit data (RS-232)
5	RTS	Request to Send
6	0V	Signal Ground (GND)

H2-SERIO-4 Wiring: RS-422/485

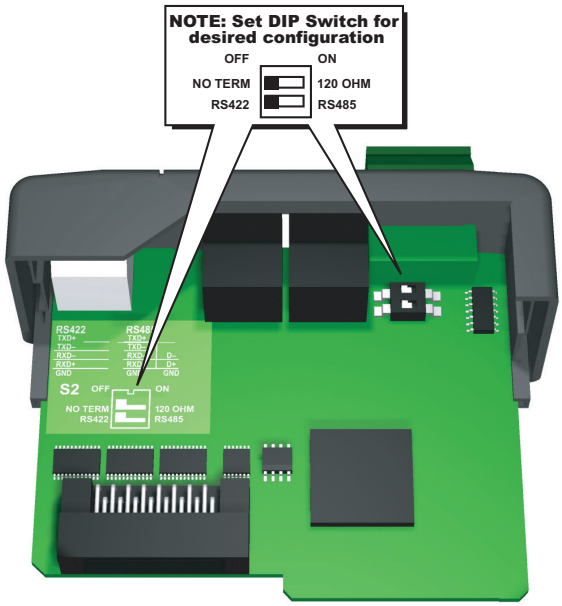

Set DIP switch S2 on the H2-SERIO-4 to:
1. Activate or deactivate the internal 120Ω termination resistor.
2. Select RS-422 or RS-485 operation.

RS-422

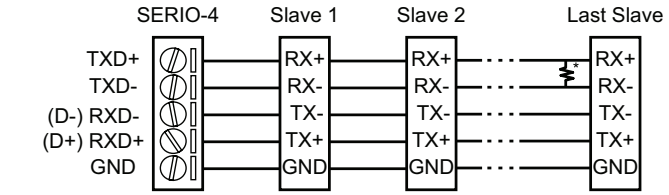

(H2-SERIO-4 contains an optional 120Ω termination resistor between RX+ and RX-; use DIP switch S2 to activate or deactivate resistor.)

* User Supplied 120Ω Termination Resistor

RS-485

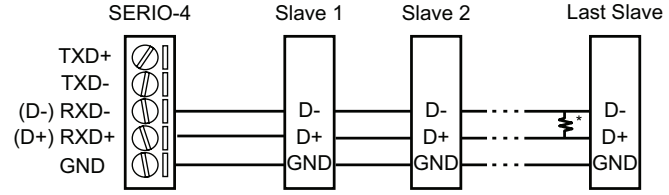

(H2-SERIO-4 contains an optional 120Ω termination resistor between RX+ and RX-; use DIP switch S2 to activate or deactivate resistor.)

* User Supplied 120Ω Termination Resistor

F2-08SIM, Input Simulator

F2-08SIM Specifications

F2-08SIM Input Simulator	
Inputs per Module	8
Base Power Required 5VDC	50mA
Terminal Type	None
Status Indicator	Switch side
Weight	2.65 oz. (75g)

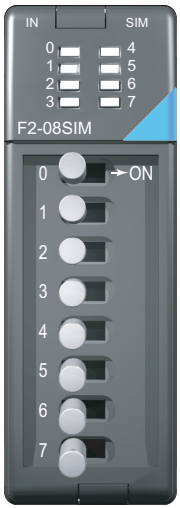

Installation and Wiring

In This Chapter...

Safety Guidelines **8–2**
Plan for Safety 8–2
Three Levels of Protection 8–3
Emergency Stops 8–3
Emergency Power Disconnect 8–4
Orderly System Shutdown 8–4
Class 1, Division 2, Approval 8–4
Mounting Guidelines **8–5**
Base Dimensions 8–5
Panel Mounting and Layout 8–6
Enclosures 8–7
Environmental Specifications 8–8
Marine Use 8–8
Agency Approvals 8–8
24VDC Power Bases 8–8
Installing Bases for Do-more **8–9**
Mounting the Base 8–9
Using Mounting Rails 8–9
Installing Components in the Base **8–10**
Base Wiring Guidelines **8–11**
Base Wiring 8–11
I/O Modules Position and Wiring **8–12**
Slot Numbering 8–12
Module Placement Restrictions 8–12
Wiring the Different Module Connectors 8–13
I/O Wiring Checklist 8–14

ZIPLink Wiring System **8–15**

I/O Wiring Strategies **8–17**

PLC Isolation Boundaries 8–17
Powering I/O Circuits with the Auxiliary Supply 8–18
Powering I/O Circuits Using Separate Supplies 8–19
Sinking / Sourcing Concepts 8–20
I/O "Common" Terminal Concepts 8–21
Connecting DC I/O to "Solid State" Field Devices 8–22
Solid State Input Sensors 8–22
Solid State Output Loads 8–22
Relay Output Guidelines 8–24
Relay Outputs – Transient Suppression for Inductive Loads in a Control System 8–25

Safety Guidelines

NOTE: *Products with CE marks perform their required functions safely and adhere to relevant standards as specified by CE directives, provided they are used according to their intended purpose and that the instructions in this manual are followed. The protection provided by the equipment may be impaired if this equipment is used in a manner not specified in this manual. A listing of our international affiliates is available on our Web site: http://www.automationdirect.com*

WARNING: Providing a safe operating environment for personnel and equipment is your responsibility and should be your primary goal during system planning and installation. Automation systems can fail and may result in situations that can cause serious injury to personnel and/or damage equipment. Do not rely on the automation system alone to provide a safe operating environment. Sufficient emergency circuits should be provided to stop either partially or totally the operation of the PLC or the controlled machine or process. These circuits should be routed outside the PLC in the event of controller failure, so that independent and rapid shutdown are available. Devices, such as "mushroom" switches or end of travel limit switches, should operate motor starter, solenoids, or other devices without being processed by the PLC. These emergency circuits should be designed using simple logic with a minimum number of highly reliable electromechanical components. Every automation application is different, so there may be special requirements for your particular application. Make sure all national, state, and local government requirements are followed for the proper installation and use of your equipment.

Plan for Safety

The best way to provide a safe operating environment is to make personnel and equipment safety part of the planning process. You should examine every aspect of the system to determine which areas are critical to operator or machine safety.

If you are not familiar with PLC system installation practices, or your company does not have established installation guidelines, you should obtain additional information from the following sources.

- NEMA — The National Electrical Manufacturers Association, located in Washington, D.C., publishes many different documents that discuss standards for industrial control systems. You can order these publications directly from NEMA. Some of these include:

  ICS 1, General Standards for Industrial Control and Systems

  ICS 3, Industrial Systems

  ICS 6, Enclosures for Industrial Control Systems

- NEC — The National Electrical Code provides regulations concerning the installation and use of various types of electrical equipment. Copies of the NEC Handbook can often be obtained from your local electrical equipment distributor or your local library.
- Local and State Agencies — many local governments and state governments have additional requirements above and beyond those described in the NEC Handbook. Check with your local Electrical Inspector or Fire Marshall office for information.

Three Levels of Protection

The publications mentioned provide many ideas and requirements for system safety. At a minimum, you should follow these regulations. Also, you should use the following techniques, which provide three levels of system control.

- Emergency stop switch for disconnecting system power
- Mechanical disconnect for output module power
- Orderly system shutdown sequence in the PLC control program

Emergency Stops

It is recommended that emergency stop circuits be incorporated into the system for every machine controlled by a PLC. For maximum safety in a PLC system, these circuits must not be wired into the controller, but should be hardwired external to the PLC. The emergency stop switches should be easily accessed by the operator and are generally wired into a master control relay (MCR) or a safety control relay (SCR) that will remove power from the PLC I/O system in an emergency.

MCRs and SCRs provide a convenient means for removing power from the I/O system during an emergency situation. By de-energizing an MCR (or SCR) coil, power to the input (optional) and output devices is removed. This event occurs when any emergency stop switch opens. However, the PLC continues to receive power and operate even though all its inputs and outputs are disabled.

The MCR circuit could be extended by placing a PLC fault relay (closed during normal PLC operation) in series with any other emergency stop conditions. This would cause the MCR circuit to drop the PLC I/O power in case of a PLC failure (memory error, I/O communications error, etc.).

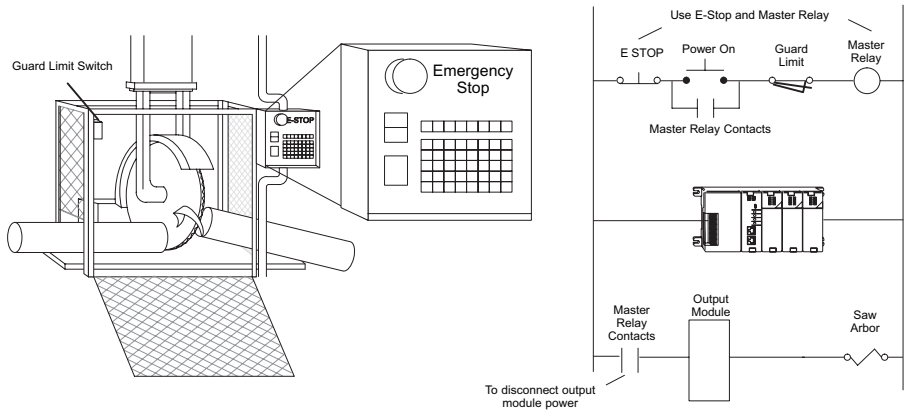

Emergency Power Disconnect

A properly rated emergency power disconnect should be used to power the PLC controlled system as a means of removing the power from the entire control system. After an emergency shutdown or any other type of power interruption, there may be requirements that must be met before the PLC control program can be restarted. For example, there may be specific register values that must be established (or maintained from the state prior to the shutdown) before operations can resume. In this case, you may want to use retentive memory locations, or include constants in the control program to insure a known starting point.

Orderly System Shutdown

Ideally, the first level of fault detection is the PLC control program, which can identify machine problems. Certain shutdown sequences should be performed. The types of problems are usually things such as jammed parts, etc. that do not pose a risk of personal injury or equipment damage.

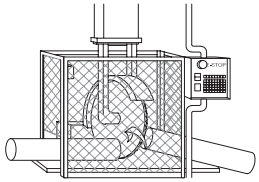

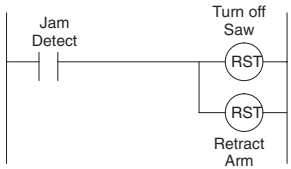

WARNING: The control program *must not* be the only form of protection for any problems that may result in a risk of personal injury or equipment damage.

Class 1, Division 2, Approval

This equipment is suitable for use in Class 1, Division 2, Zone 2, groups A, B, C and D or non-hazardous locations only.

WARNING: Explosion Hazard! Substitution of components may impair suitability for Class 1, Division 2, Zone 2.

WARNING: Explosion Hazard - Do not disconnect equipment unless power has been switched off or the area is known to be non-hazardous.

WARNING: All Do-more products used with connector accessories must use R/C (ECBT2) mating plugs. All mating plugs must have suitable ratings for the devices.

Mounting Guidelines

Before installing the PLC system you will need to know the dimensions of the components considered. The diagrams on the following pages provide the component dimensions to use in defining your enclosure specifications. Remember to leave room for potential expansion.

NOTE: *If you are using other components in your system, refer to the appropriate manual to determine how those units can affect mounting dimensions.*

Base Dimensions

The following information shows the proper mounting dimensions. The height dimension is the same for all bases. The depth varies depending on your choice of I/O module. The length varies as the number of slots increase. Make sure you have followed the installation guidelines for proper spacing.

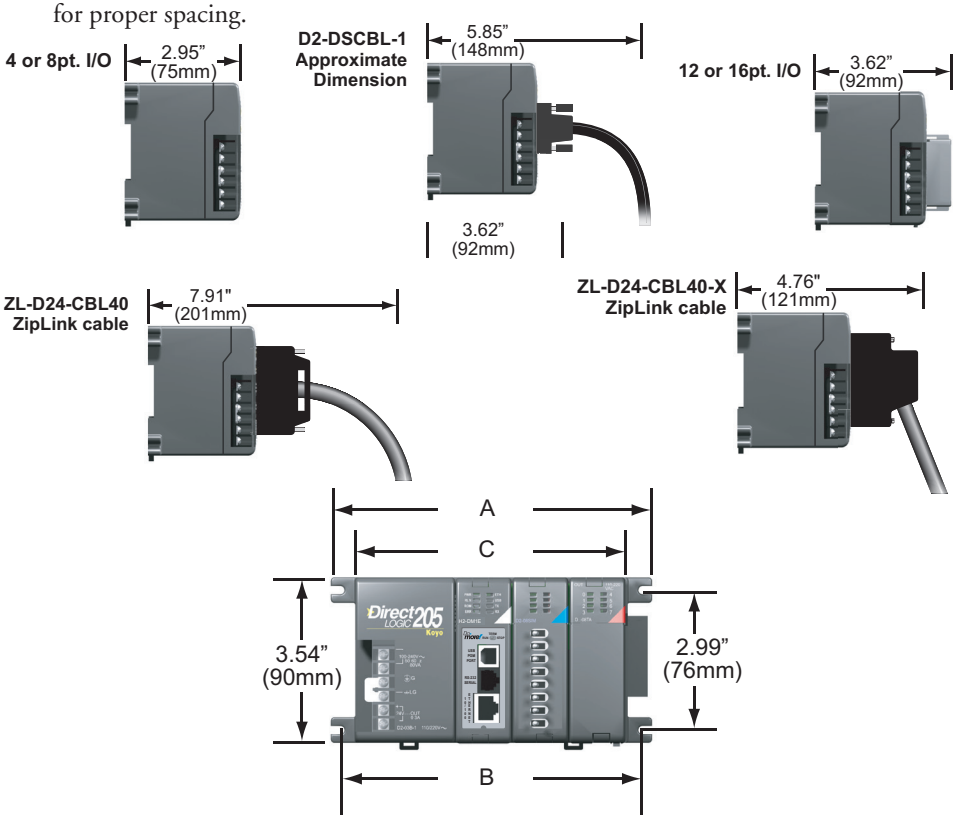

Base	A (Base Total Width)		B (Mounting Hole)		C (Component Width)	
	Inches	*Millimeters*	*Inches*	*Millimeters*	*Inches*	*Millimeters*
3-slot	6.77	172	6.41	163	5.8	148
4-slot	7.99	203	7.63	194	7.04	179
6-slot	10.43	265	10.07	256	9.48	241
9-slot	14.09	358	13.74	349	13.14	334

Panel Mounting and Layout

It is important to design your panel properly to help ensure the components operate within their environmental and electrical limits. The system installation should comply with all appropriate electrical codes and standards. It is important the system also conforms to the operating standards for the application to insure proper performance. The diagrams below reference the items in the following list.

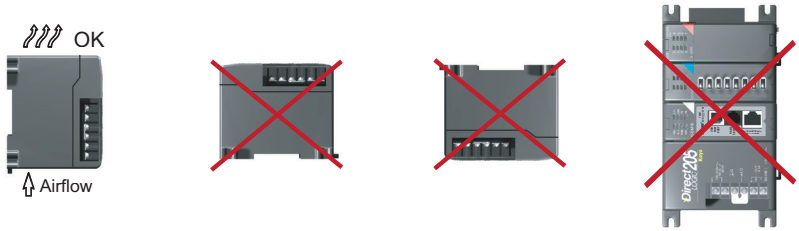

1. Mount the bases horizontally to provide proper ventilation.
2. If you place more than one base in a cabinet, there should be a minimum of 7.2 in. (183mm) between bases.
3. Provide a minimum clearance of 2in. (50mm) between the base and all sides of the cabinet. There should also be at least 1.2 in. (30mm) of clearance between the base and any wiring ducts.
4. There must be a minimum of 2in. (50mm) clearance between the panel door and the nearest component.

NOTE: *The cabinet configuration below is not suitable for EU installations. Refer to Appendix B European Union Directives.*

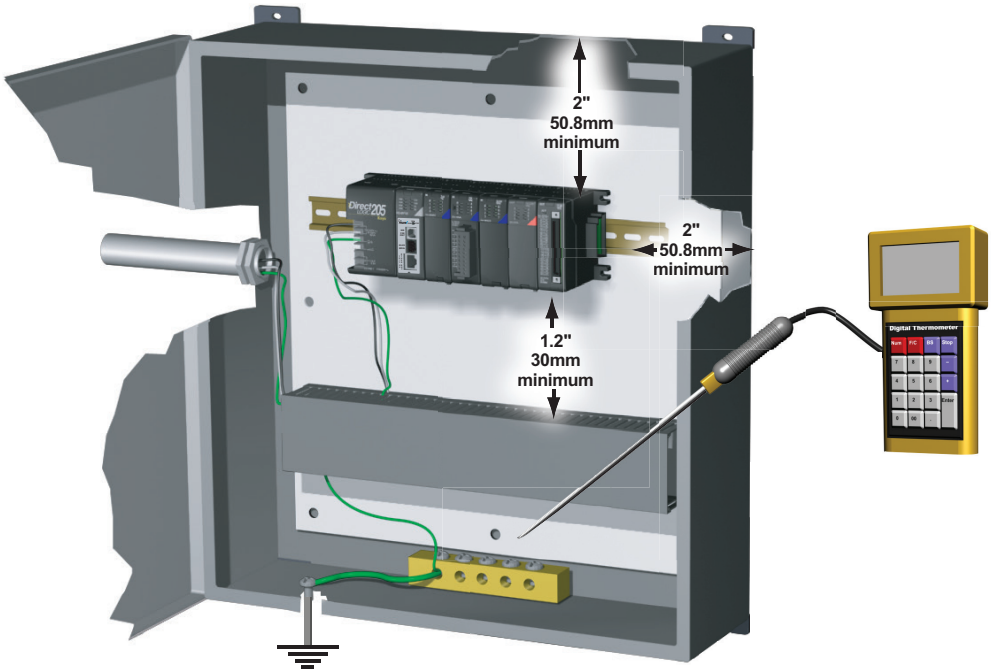

5. The ground terminal on the Do-more base must be connected to a single point ground. Use copper stranded wire to achieve a low impedance. Copper eye lugs should be crimped and soldered to the ends of the stranded wire to ensure good surface contact. Remove anodized finishes and use copper lugs and star washers at termination points. A general rule is to achieve a 0.1 ohm of DC resistance between the base and the single point ground.
6. There must be a single point ground (i.e. copper bus bar) for all devices in the panel requiring an earth ground return. The single point of ground must be connected to the panel ground termination. The panel ground termination must be connected to earth ground. For this connection you should use #12 AWG stranded copper wire as a minimum. Minimum wire sizes, color coding, and general safety practices should comply with appropriate electrical codes and standards for your region. A good common ground reference (Earth ground) is essential for proper operation of the Do-more. There are several methods of providing an adequate common ground reference, including:
   a) Installing a ground rod as close to the panel as possible.
   b) Connection to incoming power system ground.
7. Properly evaluate any installations where the ambient temperature may approach the lower or upper limits of the specifications. Place a temperature probe in the panel, close the door and operate the system until the ambient temperature has stabilized. If the ambient temperature is not within the operating specification for the Do-more system, measures such as installing a cooling/ heating source must be taken to get the ambient temperature within the operating specifications.
8. Device mounting bolts and ground braid termination bolts should be #10 copper bolts or equivalent. Tapped holes instead of nut–bolt arrangements should be used whenever possible. To ensure good contact on termination areas impediments such as paint, coating or corrosion should be removed in the area of contact.
9. The Do-more system is designed to be powered by 110/220 VAC, 24 VDC, or 125 VDC normally available throughout an industrial environment. Electrical power in some areas where the PLCs are installed is not always stable and storms can cause power surges. Due to this, powerline filters are recommended for protecting the PLCs from power surges.

Enclosures

Your selection of a proper enclosure is important to ensure safe and proper operation of your Do-more system. Applications of Do-more systems vary and may require additional features. The minimum considerations for enclosures include:

- Conformance to electrical standards
- Protection from the elements in an industrial environment
- Common ground reference
- Maintenance of specified ambient temperature
- Access to equipment
- Security or restricted access
- Sufficient space for proper installation and maintenance of equipment

Environmental Specifications

The following table lists the environmental specifications that generally apply to the Do-more system (CPU, Bases, I/O Modules). I/O module operation may fluctuate depending on the ambient temperature and your application. Please refer to the appropriate I/O module specifications for the temperature derating curves applying to specific modules.

Specification	Rating
Storage temperature	–4° F to 158° F (–20° C to 70° C)
Ambient operating temperature	32° F to 131° F (0° C to 55° C)
Ambient humidity*	30% – 95% relative humidity (Non–condensing)
Vibration resistance	MIL STD 810C, Method 514.2
Shock resistance	MIL STD 810C, Method 516.2
Noise immunity	NEMA (ICS3–304)
Atmosphere	No corrosive gases

*** Equipment will operate below 30% humidity. However, static electricity problems occur much more frequently at lower humidity levels. Make sure you take adequate precautions when you touch the equipment. Consider using ground straps, anti-static floor coverings, etc., if you use the equipment in low humidity environments.**

Marine Use

American Bureau of Shipping (ABS) certification requires flame-retarding insulation as per 4-8-3/5.3.6(a). ABS will accept Navy low smoke cables, cable qualified to NEC "Plenum rated" (fire resistant level 4), or other similar flammability resistant rated cables. Use cable specifications for your system that meet a recognized flame retardant standard (i.e. UL, IEEE, etc.) including evidence of cable test certification (i.e. tests certificate, UL file number, etc.).

***NOTE:** Wiring needs to be "low smoke" per the above paragraph. Teflon coated wire is also recommended.*

Agency Approvals

Some applications require agency approvals. Typical agency approvals which your application may require are:

- UL (Underwriters' Laboratories, Inc.)
- CSA (Canadian Standards Association)
- FM (Factory Mutual Research Corporation)
- cUL (Canadian Underwriters' Laboratories, Inc.)

24VDC Power Bases

Follow these additional installation guidelines when installing D2-03BDC1-1, D2-04BDC1-1, D2-06BDC1-1 and D2-09BDC1-1 bases:

- Install these bases in compliance with the enclosure, mounting, spacing, and segregation requirements of the ultimate application.
- These bases must be used within their marked ratings.
- These bases are intended to be installed within an enclosure rated at least IP54.
- Provisions should be made to prevent the rated voltage being exceeded by transient disturbances of more than 40%.

Installing Bases for Do-more

Mounting the Base

All I/O configurations of the Do-more may use any of the base configurations. The bases are secured to the equipment panel or mounting location using four M4 screws in the corner tabs of the base. The full mounting dimensions are given in the previous section on Mounting Guidelines.

WARNING: To minimize the risk of electrical shock, personal injury, or equipment damage, always disconnect the system power before installing or removing any system component.

Using Mounting Rails

The bases can also be secured to the cabinet by using mounting rails. You should use rails that conform to DIN EN standard 50 022. Refer to our catalog for a complete line of DIN rail, DINnectors and DIN rail mounted apparatus.

These rails are approximately 35mm high, with a depth of 7.5 mm. If you mount the base on a rail, you should also consider using end brackets on each end of the rail. The end brackets help keep the base from sliding horizontally along the rail. This helps minimize the possibility of accidentally pulling the wiring loose.

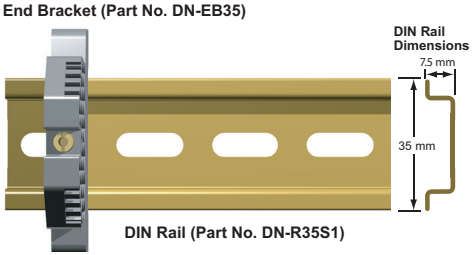

If you examine the bottom of the base, you'll notice small retaining clips. To secure the base to a DIN rail, place the base onto the rail and gently push up on the retaining clips. The clips lock the base onto the rail.

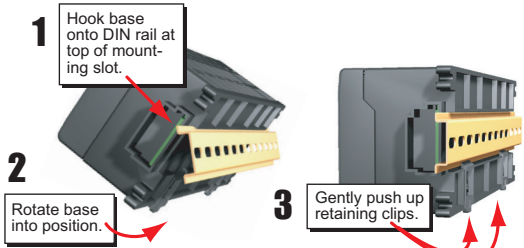

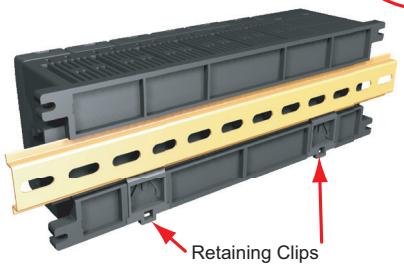

To remove the base, pull down on the retaining clips, lift up on the base slightly, and pull it away from the rail.

Installing Components in the Base

To insert components into the base: first slide the module retaining clips to the out position and align the PC board(s) of the module with the grooves on the top and bottom of the base. Push the module straight into the base until it is firmly seated in the backplane connector. Once the module is inserted into the base, push in the retaining clips to firmly secure the module to the base.

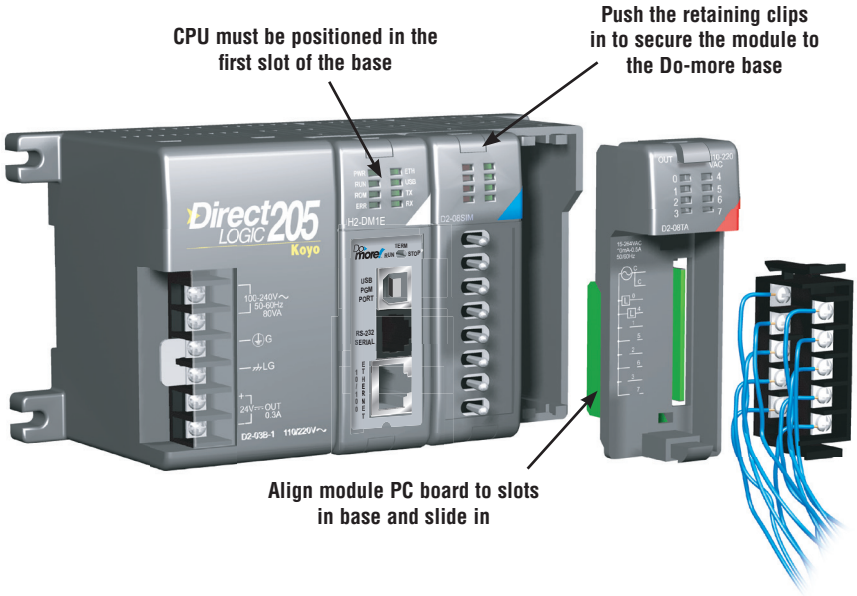

WARNING: To minimize the risk of electrical shock, personal injury, or equipment damage, always disconnect the system power before installing or removing any system component.

Base Wiring Guidelines

Base Wiring

The following diagrams show the terminal connections located on the power supply of the Do-more bases. The base terminals can accept up to 16 AWG. You may be able to use larger wiring depending on the type of wire used, but 16 AWG is the recommended size. Do not overtighten the connector screws; the recommended torque value is 7.81 lb·in (0.882 N·m).

110/220 VAC Base Terminal Strip

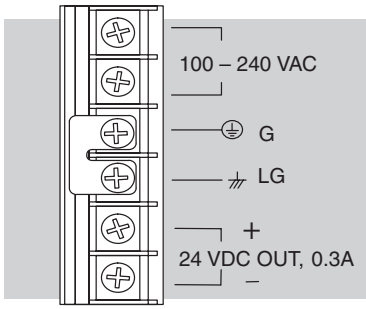

NOTE: *You can connect either a 115VAC or 220VAC supply to the AC terminals without the need of special wiring or jumpers.*

8

12/24 VDC Base Terminal Strip

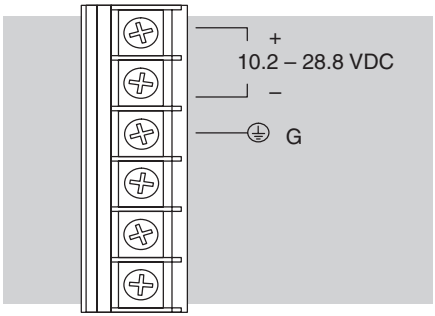

125 VDC Base Terminal Strip

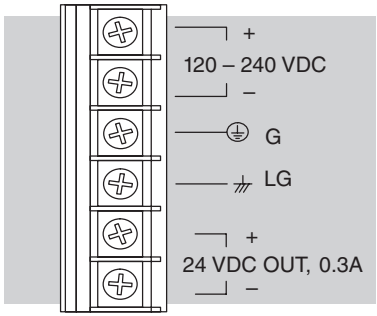

WARNING: Once the power wiring is connected, install the plastic protective cover. When the cover is removed there is a risk of electrical shock if you accidentally touch the wiring or wiring terminals.

I/O Modules Position and Wiring

Slot Numbering

The bases provide different numbers of slots for use with the I/O modules. You may notice the bases refer to 3-slot, 4-slot, etc. One of the slots is dedicated to the CPU, so you always have one less I/O slot. For example, you have five I/O slots with a 6-slot base. The I/O slots are numbered 0–4. The CPU slot always contains a PLC CPU or other CPU–slot controller and is not numbered.

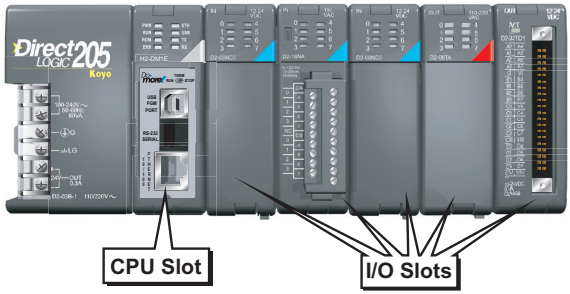

Module Placement Restrictions

The following table lists the valid locations for all types of modules in a Do-more system:

Module/Unit	Local CPU Base	Ethernet Remote I/O Base
CPUs	CPU Slot Only	
DC Input Modules	x	x
AC Input Modules	x	x
DC Output Modules	x	x
AC Output Modules	x	x
Relay Output Modules	x	x
Analog Input and Output Modules	x	x
Ethernet Remote I/O		
Ethernet Remote Master	x	
CPU Interface		
Ethernet Base Controller		CPU Slot Only
Specialty Modules		
Counter I/O	x	
Ethernet Communications	x	
Simulator	x	x
Filler	x	x

Wiring the Different Module Connectors

There are two types of module connectors for the Do-more I/O. Some modules have normal screw terminal connectors. Other modules have connectors with recessed screws. The recessed screws help minimize the risk of someone accidentally touching active wiring.

Both types of connectors can be easily removed. If you examine the connectors closely, you'll notice there are squeeze tabs on the top and bottom. To remove the terminal block, press the squeeze tabs and pull the terminal block away from the module.

We also have DIN rail mounted terminal blocks, DINnectors (refer to our catalog for a complete listing of all available products). *ZIP*Link systems come with special pre–assembled cables with the I/O connectors installed and wired.

WARNING: For some modules, field device power may still be present on the terminal block even though the PLC system is turned off. To minimize the risk of electrical shock, check all field device power before you remove the connector.

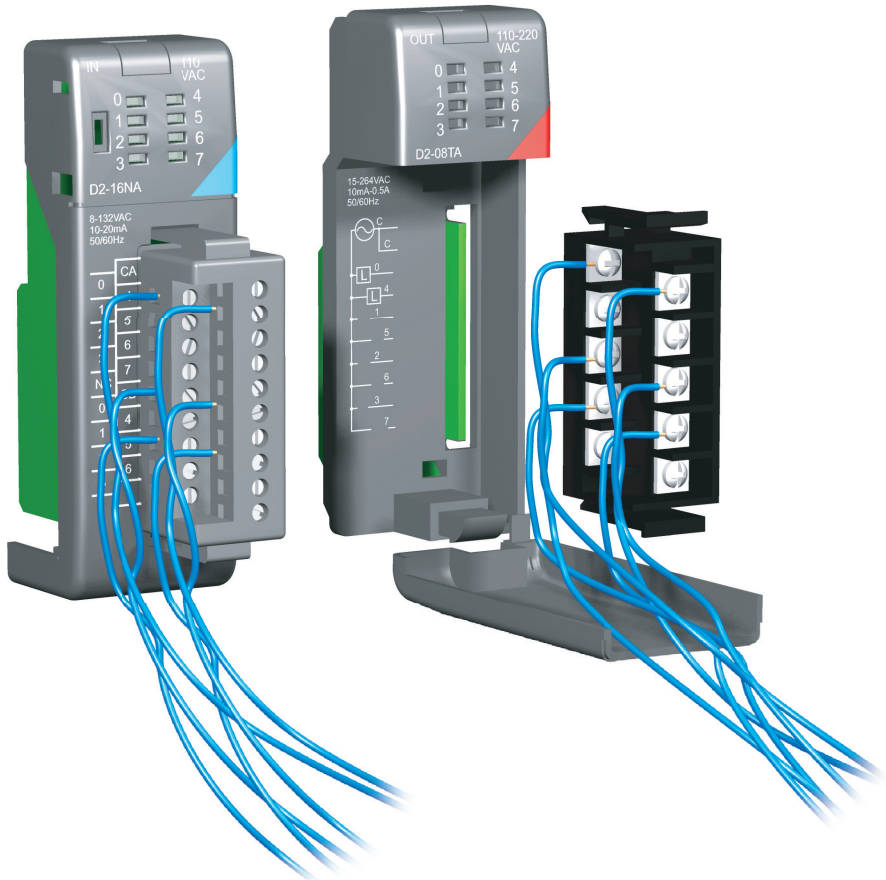

I/O Wiring Checklist

Use the following guidelines when wiring the I/O modules in your system.

1. There is a limit to the size of wire the modules can accept. The table below lists the suggested AWG for each module type. When making terminal connections, follow the suggested torque values.

Module type	Suggested AWG Range	Suggested Torque
4 point	16–24 AWG	7.81 lb·in (0.882 N·m)
8 point	16–24 AWG	7.81 lb·in (0.882 N·m)
12 point	16–24 AWG	2.65 lb·in (0.3 N·m)
16 point	16–24 AWG	2.65 lb·in (0.3 N·m)

NOTE: *16 AWG Type TFFN or Type MTW is recommended. Other types of 16 AWG may be acceptable, but it really depends on the thickness and stiffness of the wire insulation. If the insulation is too thick or stiff and a majority of the module's I/O points are used, then the plastic terminal cover may not close properly or the connector may pull away from the module. This applies especially for high temperature thermoplastics such as THHN.*

2. Always use a continuous length of wire, do not combine wires to attain a needed length.
3. Use the shortest possible wire length.
4. Use wire trays for routing where possible.
5. Avoid running wires near high energy wiring. Also, avoid running input wiring close to output wiring where possible.
6. To minimize voltage drops when wires must run a long distance , consider using multiple wires for the return line.
7. Avoid running DC wiring in close proximity to AC wiring where possible.
8. Avoid creating sharp bends in the wires.
9. To reduce the risk of having a module with a blown fuse, we suggest you add external fuses to your I/O wiring. A fast blow fuse, with a lower current rating than the I/O module fuse can be added to each common, or a fuse with a rating of slightly less than the maximum current per output point can be added to each output. Refer to our catalog for a complete line of DINnectors, DIN rail mounted fuse blocks.

ZIPLink Wiring System

The *ZIP*Link I/O connector systems allows quick and easy connections using cables that are prewired to the I/O module terminal blocks at one end and plug into a *ZIP*Link connector module terminal block at the other end.

Use the following tables to specify your *ZIP*Link wiring system. See the *ZIP*Link section of the catalog for more details.

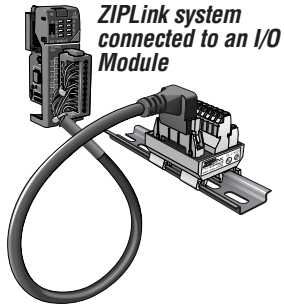

ZIPLink system connected to an I/O Module

***NOTE:** ZIPLink Connector Modules and ZIPLink Cables specifications are in the ZIPLink catalog section.*

Do-more PLC Input Module *ZIP*Link Selector

PLC		*ZIP*Link		
Input Module	***# of Terms***	***Component***	***Module***	***Cable †***
D2-08ND3	10	Feedthrough	ZL-RTB20	ZL-D2-CBL10*
D2-16ND3-2	19	Feedthrough	ZL-RTB20	ZL-D2-CBL19*
		Sensor	ZL-LTB16-24	ZL-D2-CBL19*
D2-32ND3[1]	40	Feedthrough	ZL-RTB40	ZL-D24-CBL40*
				ZL-D24-CBL40*X
		Sensor	ZL-LTB32-24	ZL-D24-CBL40*
				ZL-D24-CBL40*X
D2-32ND3-2[1]	40	Feedthrough	ZL-RTB40	ZL-D24-CBL40*
				ZL-D24-CBL40*X
		Sensor	ZL-LTB32-24	ZL-D24-CBL40*
				ZL-D24-CBL40*X
D2-08NA-1	10	Feedthrough	ZL-RTB20	ZL-D2-CBL10*
D2-08NA-2	10	Feedthrough	ZL-RTB20	ZL-D2-CBL10*
D2-16NA	19	Feedthrough	ZL-RTB20	ZL-D2-CBL19*

† X in the part number represents a 45° angle plug

**** Select the cable length by replacing the * with: Blank = 0.5 m, 1 = 1.0 m, or -2 = 2.0 m.***

1 To make a custom cable for the 32-point modules, use: Ribbon-style Connector ZL-D24-CON-R, Solder-style 180° connector ZL-D24-CON or Solder-style 45° connector ZL-D24-CON-X

2 The F2-04RTD and F2-04THM modules are not supported by the ZIPLink wiring system.

Do-more PLC Analog Module *ZIP*Link Selector

PLC		*ZIP*Link		
Analog Module	***# of Terms***	***Component***	***Module***	***Cable***
F2-04AD-1	10	Feedthrough	ZL-RTB20	ZL-D2-CBL10*
F2-08AD-1	10	Feedthrough	ZL-RTB20	ZL-D2-CBL10*
F2-04AD-2	10	Feedthrough	ZL-RTB20	ZL-D2-CBL10*
F2-08AD-2	10	Feedthrough	ZL-RTB20	ZL-D2-CBL10*
F2-02DA-1	10	Feedthrough	ZL-RTB20	ZL-D2-CBL10*
F2-02DA-1L	10	Feedthrough	ZL-RTB20	ZL-D2-CBL10*
F2-02DAS-1	10	Feedthrough	ZL-RTB20	ZL-D2-CBL10*
F2-08DA-1	19	Feedthrough	ZL-RTB20	ZL-D2-CBL19*
F2-02DA-2	10	Feedthrough	ZL-RTB20	ZL-D2-CBL10*
F2-02DA-2L	10	Feedthrough	ZL-RTB20	ZL-D2-CBL10*
F2-02DAS-2	10	Feedthrough	ZL-RTB20	ZL-D2-CBL10*
F2-08DA-2	10	Feedthrough	ZL-RTB20	ZL-D2-CBL10*
F2-4AD2DA	10	Feedthrough	ZL-RTB20	ZL-D2-CBL10*
F2-8AD4DA-1	19	Feedthrough	ZL-RTB20	ZL-D2-CBL19*
F2-8AD4DA-2	19	Feedthrough	ZL-RTB20	ZL-D2-CBL19*
F2-04RTD[2]	Matched Only	See Note 2		
F2-04THM[2]	Matched Only	See Note 2		

Do-more PLC Combo In/Out Module *ZIP*Link Selector

PLC		*ZIP*Link		
Combo Module	***# of Terms***	***Component***	***Module***	***Cable***
D2-08CDR	10	Feedthrough	ZL-RTB20	ZL-D2-CBL10*

Do-more PLC Output Module *ZIP*Link Selector				
PLC		***ZIP*Link**		
Output Module	***# of Terms***	***Component***	***Module***	***Cable †***
D2-04TD1[2]	10	Feedthrough	ZL-RTB20	ZL-D2-CBL10*
D2-08TD1	10	Feedthrough	ZL-RTB20	ZL-D2-CBL10*
D2-08TD2	10	Feedthrough	ZL-RTB20	ZL-D2-CBL10*
D2-16TD1-2	19	Feedthrough	ZL-RTB20	ZL-D2-CBL19*
		Fuse	ZL-RFU20[4]	ZL-D2-CBL19*
		Relay	ZL-RRL16-24-1	ZL-D2-CBL19*
D2-16TD2-2	19	Feedthrough	ZL-RTB20	ZL-D2-CBL19*
		Fuse	ZL-RFU20[4]	ZL-D2-CBL19*
		Relay	ZL-RRL16-24-2	ZL-D2-CBL19*
F2-16TD1P	19	Feedthrough	ZL-RTB20	ZL-D2-CBL19*
		Relay	ZL-RRL16-24-1	ZL-D2-CBL19*
F2-16TD2P	19	Feedthrough	ZL-RTB20	ZL-D2-CBL19*
		Relay	ZL-RRL16-24-2	ZL-D2-CBL19*
D2-32TD1[1]	40	Feedthrough	ZL-RTB40	ZL-D24-CBL40*
				ZL-D24-CBL40*X
		Fuse	ZL-RFU40[4]	ZL-D24-CBL40*
				ZL-D24-CBL40*X
D2-32TD2[1]	40	Feedthrough	ZL-RTB40	ZL-D24-CBL40*
				ZL-D24-CBL40*X
		Fuse	ZL-RFU40[4]	ZL-D24-CBL40*
				ZL-D24-CBL40*X
D2-08TA	10	Feedthrough	ZL-RTB20	ZL-D2-CBL10*
F2-08TA	10	Feedthrough	ZL-RTB20	ZL-D2-CBL10*
D2-12TA	19	Feedthrough	ZL-RTB20	ZL-D2-CBL19*
		Fuse	ZL-RFU20[4]	ZL-D2-CBL19*
D2-04TRS[2]	10	Feedthrough	ZL-RTB20	ZL-D2-CBL10*
D2-08TR	10	Feedthrough	ZL-RTB20	ZL-D2-CBL10*
F2-08TRS[2]	19	Feedthrough	ZL-RTB20	ZL-D2-CBL19*
F2-08TR[3]	10	Feedthrough	ZL-RTB20	ZL-D2-CBL10*
D2-12TR	19	Feedthrough	ZL-RTB20	ZL-D2-CBL19*
		Fuse	ZL-RFU20[4]	ZL-D2-CBL19*

† X in the part number represents a 45° angle plug

** Select the cable length by replacing the * with: Blank = 0.5 m, -1 = 1.0 m, or -2 = 2.0 m.*

1 To make a custom cable for the 32-point modules, use: Ribbon-style Connector ZL-D24-CON-R, Solder-style 180° connector ZL-D24-CON or Solder-style 45° connector ZL-D24-CON-X

2 Caution: The D2-04TD1, D2-04TRS, and F2-08TRS outputs are derated not to exceed module specs 2A per point and 2A per common when used with the ZIPLink wiring system.

3 The F2-08TR outputs are derated not to exceed 2A per point and 4A per common when used with the ZIPLink wiring system.

4 Note: Fuses (5 x 20 mm) are not included. See Edison Electronic Fuse section for (5 x 20 mm) fuse. S500 and GMA electronic circuit protection for fast-acting maximum protection. S506 and GMC electronic circuit protection for time-delay performance. Ideal for inductive circuits. To ensure proper operation, do not exceed the voltage and current rating of ZIPLink module. ZL-RFU20 = 2A per circuit; ZL-RFU40 = 400mA per circuit.

I/O Wiring Strategies

The Do-more PLC system is very flexible and will work in many different wiring configurations. By studying this section before actual installation, you can probably find the best wiring strategy for your application. This will help to lower system cost, wiring errors, and avoid safety problems.

PLC Isolation Boundaries

PLC circuitry is divided into three main regions separated by isolation boundaries, shown in the drawing below. Electrical isolation provides safety, so that a fault in one area does not damage another. A transformer in the power supply provides isolation between the primary and secondary sides. Opto-couplers provide isolation in Input and Output circuits. This isolates logic circuitry from the field side, where factory machinery connects. Note the discrete inputs are isolated from the discrete outputs, because each is isolated from the logic side. Isolation boundaries protect the operator interface (and the operator) from power input faults or field wiring faults. When wiring a PLC, it is extremely important to avoid making external connections that connect logic side circuits to any other.

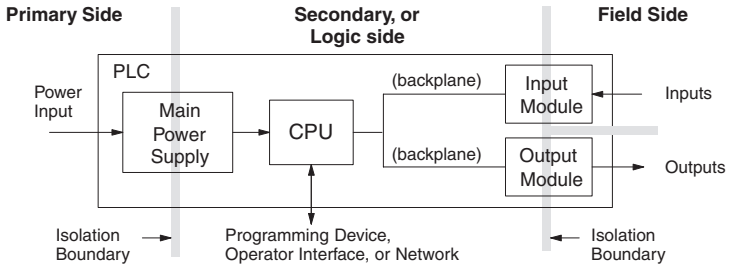

In addition to the basic circuits covered above, AC-powered and 125VDC bases include an auxiliary +24VDC power supply with its own isolation boundary. Since the supply output is isolated from the other three circuits, it can power input and/or output circuits!

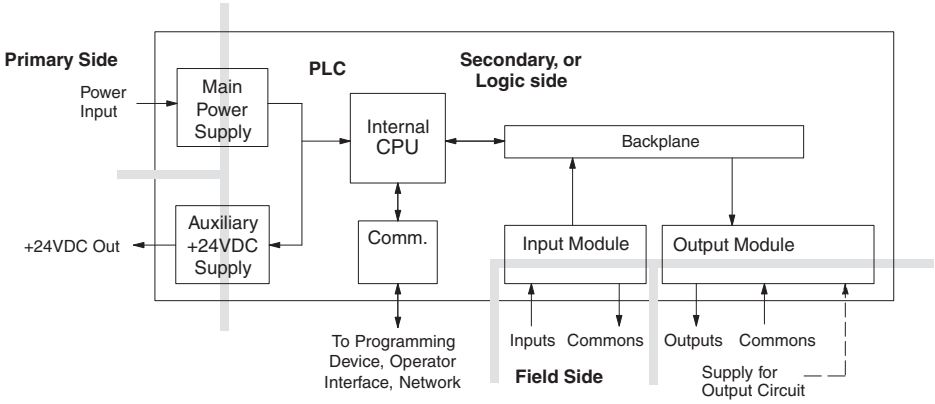

Powering I/O Circuits with the Auxiliary Supply

In some cases, using the built-in auxiliary +24VDC supply can result in a cost savings for your control system. It can power combined loads up to 300mA. Be careful not to exceed the current rating of the supply. If you are the system designer for your application, you may be able to select and design in field devices which can use the +24VDC auxiliary supply.

All AC powered and 125VDC bases feature the internal auxiliary supply. If input devices AND output loads need +24VDC power, the auxiliary supply may be able to power both circuits as shown in the following diagram.

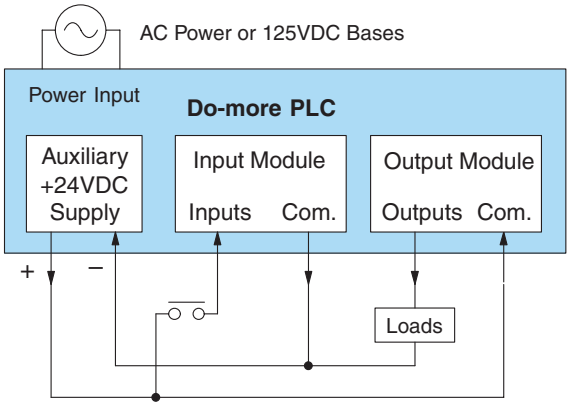

The 12/24VDC powered bases are designed for application environments in which low-voltage DC power is more readily available than AC. These include a wide range of battery–powered applications, such as remotely-located control, in vehicles, portable machines, etc. For this application type, all input devices and output loads typically use the same DC power source. Typical wiring for DC-powered applications is shown in the following diagram.

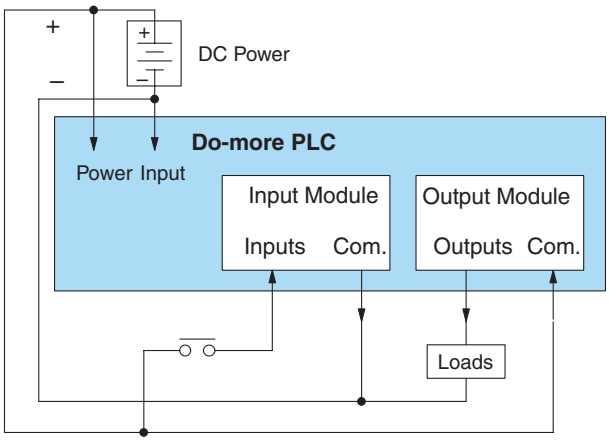

Powering I/O Circuits Using Separate Supplies

In most applications it will be necessary to power the input devices from one power source, and to power output loads from another source. Loads often require high-energy AC power, while input sensors use low-energy DC. If a machine operator is likely to come in close contact with input wiring, then safety reasons also require isolation from high-energy output circuits. It is most convenient if the loads can use the same power source as the PLC, and the input sensors can use the auxiliary supply, as shown to the left in the figure below.

If the loads cannot be powered from the PLC supply, then a separate supply must be used as shown to the right in the figure below.

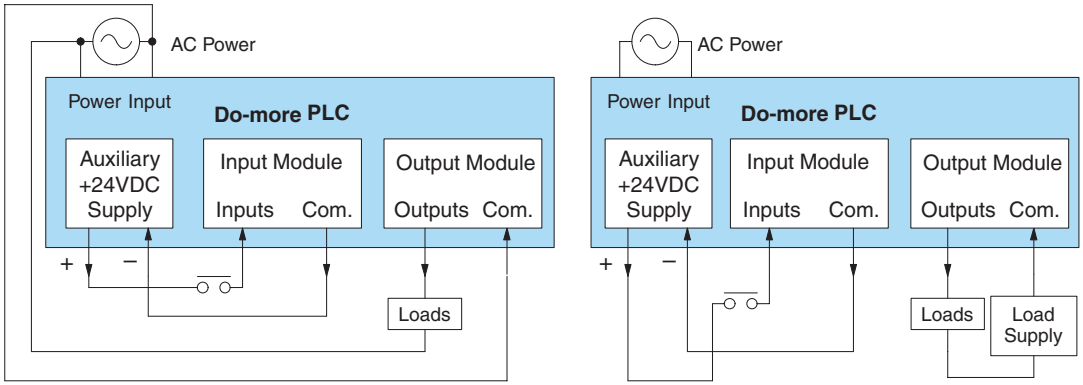

Some applications will use the PLC external power source to also power the input circuit. This typically occurs on DC-powered PLCs, as shown in the drawing below to the left. The inputs share the PLC power source supply, while the outputs have their own separate supply. A worst-case scenario, from a cost and complexity viewpoint, is an application which requires separate power sources for the PLC, input devices, and output loads. The example wiring diagram below on the right shows how this can work, but also the auxiliary supply output is an unused resource. You will want to avoid this situation if possible.

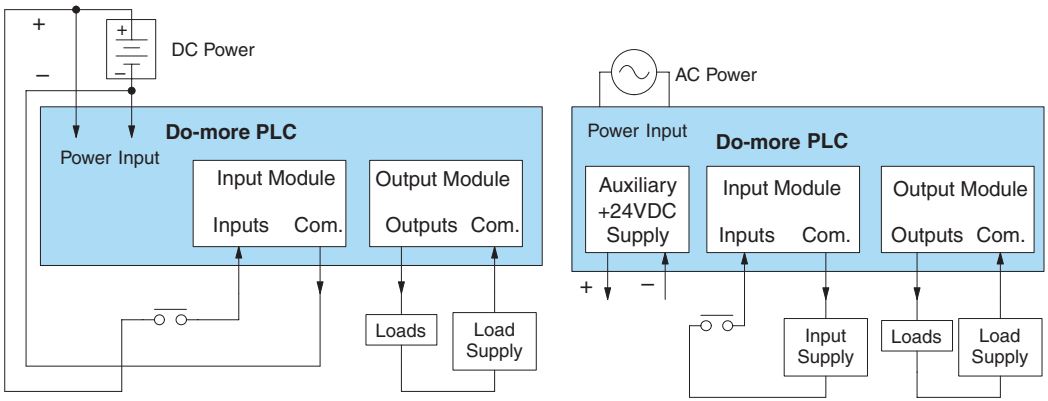

Sinking / Sourcing Concepts

Before going further in the study of wiring strategies, you must have a solid understanding of "sinking" and "sourcing" concepts. Use of these terms occurs frequently in input or output circuit discussions. It is the goal of this section to make these concepts easy to understand, further ensuring your success in installation. First the following short definitions are provided, followed by practical applications.

Sinking = provides a path to supply ground (–)

Sourcing = provides a path to supply source (+)

First you will notice these are only associated with DC circuits and not AC, because of the reference to (+) and (–) polarities. Therefore, sinking and sourcing terminology only applies to DC input and output circuits. Input and output points that are sinking only or sourcing only can conduct current in only one direction. This means it is possible to connect the external supply and field device to the I/O point with current trying to flow in the wrong direction, and the circuit will not operate. However, you can successfully connect the supply and field device every time by understanding "sourcing" and "sinking".

For example, the figure to the right depicts a "sinking" input. To properly connect the external supply, you will have to connect it so the input provides a path to ground (–). Start at the PLC input terminal, follow through the input sensing circuit, exit at the common terminal, and connect the supply (–) to the common terminal. By adding the switch, between the supply (+) and the input, the circuit has been completed . Current flows in the direction of the arrow when the switch is closed.

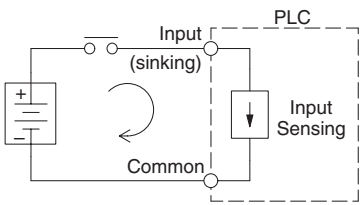

Apply the circuit principle above to the four possible combinations of input/output sinking/sourcing types as shown below. The I/O module specifications found in the "Specifications" chapters list the input or output type.

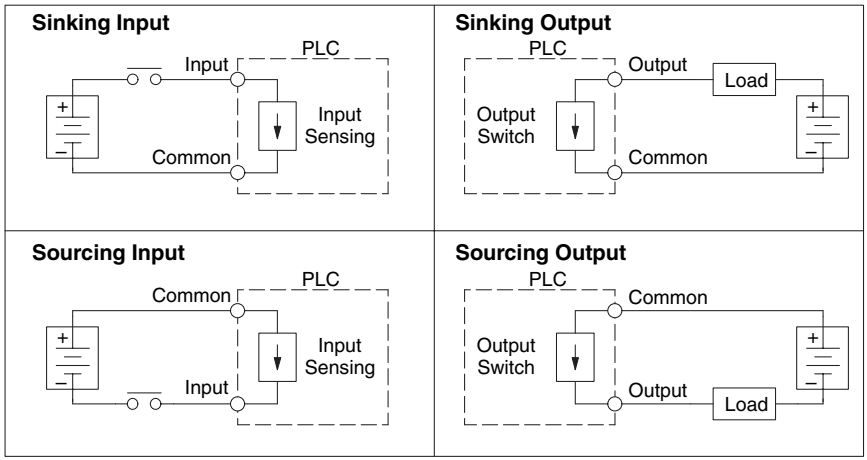

I/O "Common" Terminal Concepts

In order for a PLC I/O circuit to operate, current must enter at one terminal and exit at another. Therefore, at least two terminals are associated with every I/O point. In the figure to the right, the Input or Output terminal is the main path for the current. An additional terminal must provide the return path to the power supply.

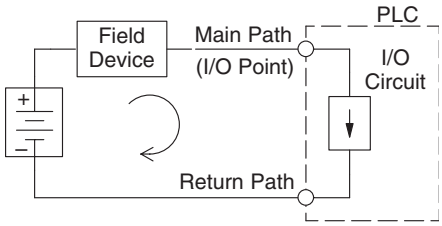

If there were unlimited space and budget for I/O terminals, every I/O point could have two dedicated terminals as the figure above shows. However, providing this level of flexibility is not practical or even necessary for most applications. So, most Input or Output points on PLCs are in groups which share the return path (called commons). The figure to the right shows a group (or bank) of four input points which share a common return path. In this way, the four inputs require only five terminals instead of eight.

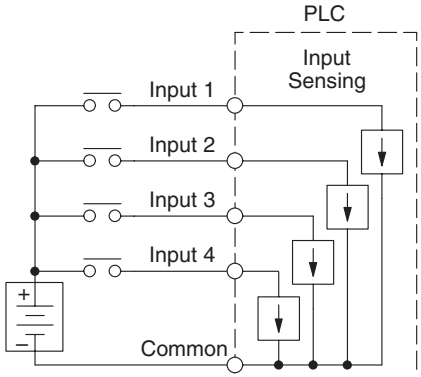

NOTE: *In the circuit above, the current in the common path is 4 times any channel's input current when all inputs are energized. This is especially important in output circuits, where heavier gauge wire is sometimes necessary on commons.*

Most Do-more input and output modules group their I/O points into banks that share a common return path. The best indication of I/O common grouping is on the wiring label, such as the one shown to the right. There are two circuit banks with eight input points in each. The common terminal for each is labeled "CA" and "CB", respectively.

In the wiring label example, the positive terminal of a DC supply connects to the common terminals. Some symbols you will see on the wiring labels, and their meanings are:

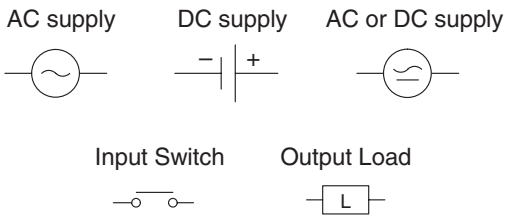

Connecting DC I/O to "Solid State" Field Devices

In the previous section on Sourcing and Sinking concepts, the DC I/O circuits were explained to sometimes only allow current to flow one way. This is also true for many of the field devices which have solid-state (transistor) interfaces. In other words, field devices can also be sourcing or sinking.

NOTE: *When connecting two devices in a series DC circuit, one device must be wired as sourcing and the other as sinking.*

Solid State Input Sensors

Several DC input modules are flexible because they detect current flow in either direction, so they can be wired as either sourcing or sinking. In the following circuit, a field device has an open-collector NPN transistor output. It sinks current from the PLC input point, which

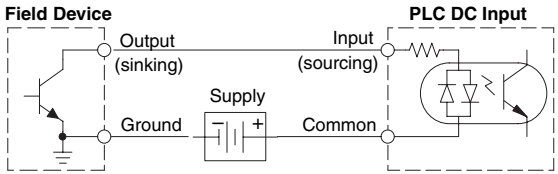

sources current. The power supply can be the +24 auxiliary supply or another supply (+12 VDC or +24VDC), as long as the input specifications are met.

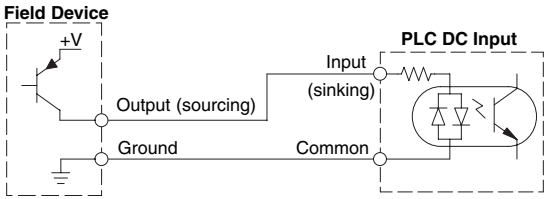

In the above circuit, a field device has an open-collector PNP transistor output. It sources current to the PLC input point, which sinks the current back to ground. Since the field device is sourcing current, no additional power supply is required.

Solid State Output Loads

Sometimes an application requires connecting a PLC output point to a solid state input on a device. This type of connection is usually made to carry a low-level control signal, not to send DC power to an actuator.

Several of the Do-more DC output modules are the sinking type. This means that each DC output provides a path to ground when it is energized. In the following circuit, the PLC output point sinks current to the output common when energized. It is connected to a sourcing input of a field device input.

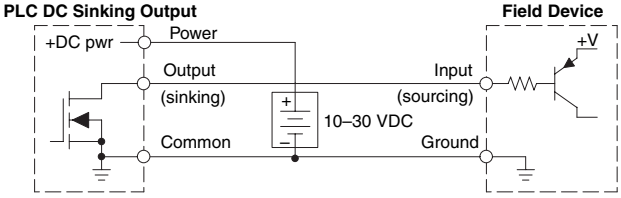

In the next example a PLC sinking DC output point is connected to the sinking input of a field device. This is a little tricky, because both the PLC output and field device input are sinking type. Since the circuit must have one sourcing and one sinking device, a sourcing capability needs to be added to the PLC output by using a pull-up resistor. In the circuit below, a $R_{pull\text{-}up}$ is connected from the output to the DC output circuit power input.

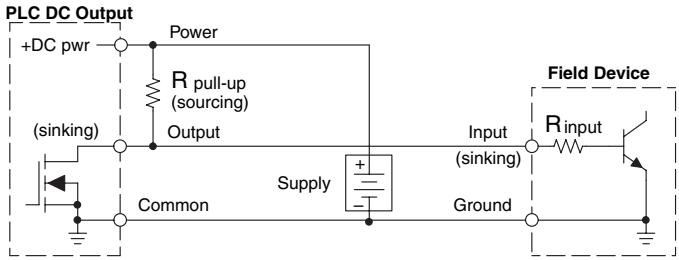

NOTE : *DO NOT attempt to drive a heavy load (>25mA) with this pull-up method*

NOTE : *Using the pull-up resistor to implement a sourcing output has the effect of inverting the output point logic. In other words, the field device input is energized when the PLC output is OFF, from a ladder logic point of view. Your ladder program must comprehend this and generate an inverted output. Or, you may choose to cancel the effect of the inversion elsewhere, such as in the field device.*

It is important to choose the correct value of $R_{pull\text{-}up}$. In order to do so, you need to know the nominal input current to the field device (I_{input}) when the input is energized. If this value is not known, it can be calculated as shown (a typical value is 15mA). Then use I_{input} and the voltage of the external supply to compute $R_{pull\text{-}up}$. Then calculate the power $P_{pull\text{-}up}$ (in watts), in order to size $R_{pull\text{-}up}$ properly.

$$I_{input} = \frac{V_{input\,(turn\text{–}on)}}{R_{input}}$$

$$R_{pull\text{-}up} = \frac{V_{supply} - 0.7}{I_{input}} - R_{input} \qquad P_{pull\text{-}up} = \frac{V_{supply}^{\,2}}{R_{pullup}}$$

Of course, the easiest way to drive a sinking input field device is to use a DC sourcing output module as shown below. The Darlington NPN stage will have about 1.5 V ON-state saturation, but this is not a problem with low-current solid-state loads.

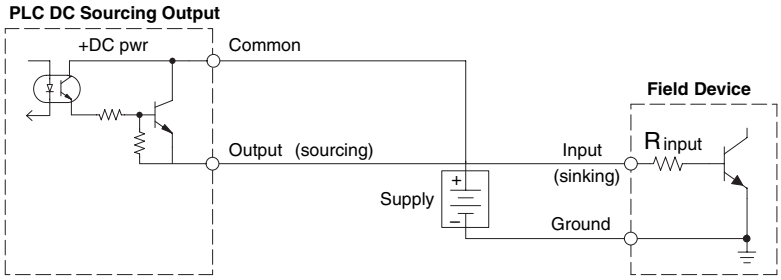

Relay Output Guidelines

Several output modules in the Do-more I/O family feature relay outputs: D2–04TRS, D2–08TR, D2–12TR, D2–08CDR, F2–08TR and F2–08TRS. Relays are best for the following applications:

- Loads that require higher currents than the solid-state outputs can deliver
- Cost-sensitive applications
- Some output channels need isolation from other outputs (such as when some loads require different voltages than other loads)

Some applications in which NOT to use relays:

- Loads that require currents under 10mA
- Loads which must be switched at high speed or heavy duty cycle

Relay outputs in the Do-more output modules are available in two contact arrangements, shown to the right. The Form A type, or SPST (single pole, single throw) type, is normally open and is the simplest to use. The Form C type, or SPDT (single pole, double throw) type, has a center contact which moves and a stationary contact on either side. This provides a normally closed contact and a normally open contact.

Some relay output module's relays share common terminals, which connect to the wiper contact in each relay of the bank. Other relay modules have relays which are completely isolated from each other. In all cases, the module drives the relay coil when the corresponding output point is on.

Relay with Form A contacts

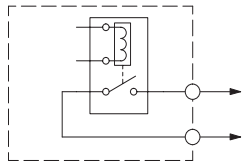

Relay with Form C contacts

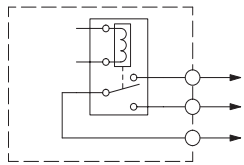

Relay Outputs – Transient Suppression for Inductive Loads in a Control System

The following pages are intended to give a quick overview of the negative effects of transient voltages on a control system and provide some simple advice on how to effectively minimize them. The need for transient suppression is often not apparent to the newcomers in the automation world. Many mysterious errors that can afflict an installation can be traced back to a lack of transient suppression.

What is a Transient Voltage and Why is it Bad?

Inductive loads (devices with a coil) generate transient voltages as they transition from being energized to being de-energized. If not suppressed, the transient can be many times greater than the voltage applied to the coil. These transient voltages can damage PLC outputs or other electronic devices connected to the circuit, and cause unreliable operation of other electronics in the general area. Transients must be managed with suppressors for long component life and reliable operation of the control system.

This example shows a simple circuit with a small 24V/125mA/3W relay. As you can see, when the switch is opened, thereby de-energizing the coil, the transient voltage generated across the switch contacts peaks at 140V!

Example: Circuit with no Suppression

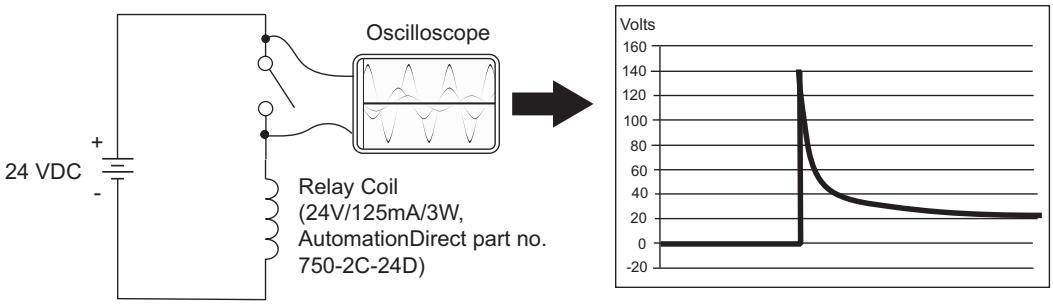

In the same circuit, replacing the relay with a larger 24V/290mA/7W relay will generate a transient voltage exceeding 800V (not shown). Transient voltages like this can cause many problems, including:

- Relay contacts driving the coil may experience arcing, which can pit the contacts and reduce the relay's lifespan.
- Solid state (transistor) outputs driving the coil can be damaged if the transient voltage exceeds the transistor's ratings. In extreme cases, complete failure of the output can occur the very first time a coil is de-energized.
- Input circuits, which might be connected to monitor the coil or the output driver, can also be damaged by the transient voltage.

A very destructive side-effect of the arcing across relay contacts is the electromagnetic interference (EMI) it can cause. This occurs because the arcing causes a current surge, which releases RF energy. The entire length of wire between the relay contacts, the coil, and the power source carries the current surge and becomes an antenna that radiates the RF energy. It will readily couple into parallel wiring and may disrupt the PLC and other electronics in the area. This EMI can make an otherwise stable control system behave unpredictably at times.

PLC's Integrated Transient Suppressors

Although the PLC's outputs typically have integrated suppressors to protect against transients, they are not capable of handling them all. It is usually necessary to have some additional transient suppression for an inductive load.

Here is another example using the same 24V/125mA/3W relay used earlier. This example measures the PNP transistor output of a D0-06DD2 PLC, which incorporates an integrated Zener diode for transient suppression. Instead of the 140V peak in the first example, the transient voltage here is limited to about 40V by the Zener diode. While the PLC will probably tolerate repeated transients in this range for some time, the 40V is still beyond the module's peak output voltage rating of 30V.

Example: Small Inductive Load with Only Integrated Suppression

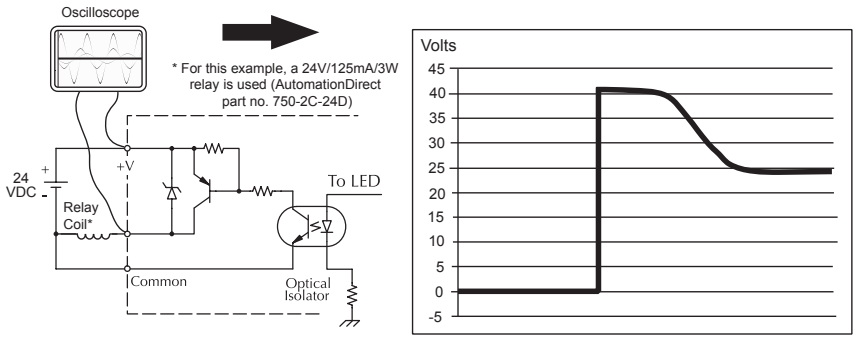

The next example uses the same circuit as above, but with a larger 24V/290mA/7W relay, thereby creating a larger inductive load. As you can see, the transient voltage generated is much worse, peaking at over 50V. Driving an inductive load of this size without additional transient suppression is very likely to permanently damage the PLC output.

Example: Larger Inductive Load with Only Integrated Suppression

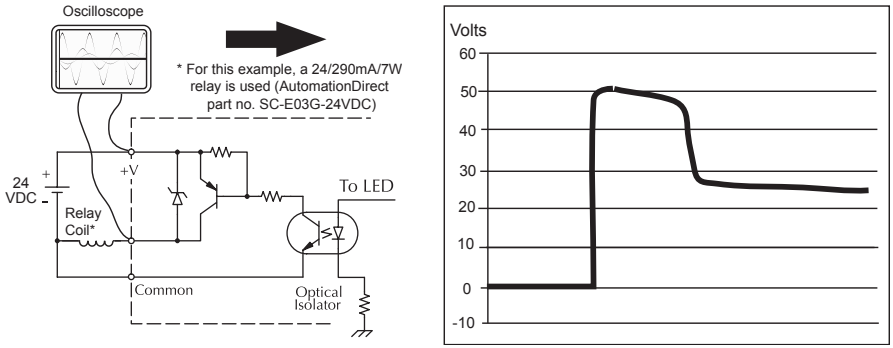

Additional transient suppression should be used in both these examples. If you are unable to measure the transients generated by the connected loads of your control system, using additional transient suppression on all inductive loads would be the safest practice.

Types of Additional Transient Protection

DC Coils:

The most effective protection against transients from a DC coil is a flyback diode. A flyback diode can reduce the transient to roughly 1V over the supply voltage, as shown in this example.

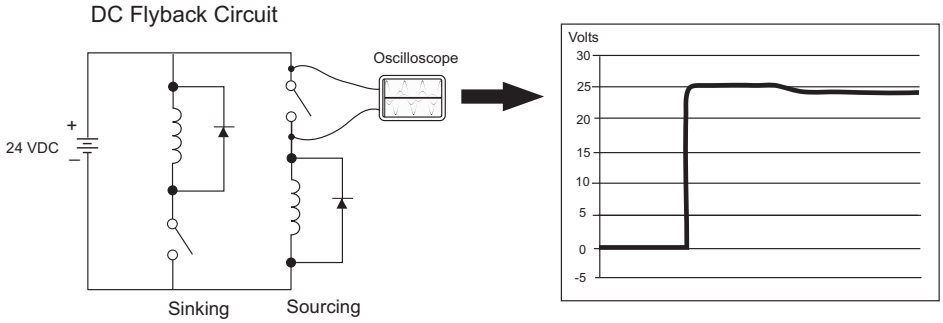

Many AutomationDirect socketed relays and motor starters have add-on flyback diodes that plug or screw into the base, such as the AD-ASMD-250 protection diode module and 784-4C-SKT-1 socket module shown below. If an add-on flyback diode is not available for your inductive load, an easy way to add one is to use AutomationDirect's DN-D10DR-A diode terminal block, a 600VDC power diode mounted in a slim DIN rail housing.

AD-ASMD-250
Protection Diode Module

784-4C-SKT-1
Relay Socket

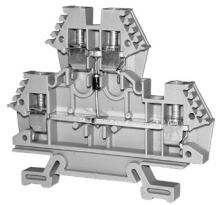

DN-D10DR-A
Diode Terminal Block

Two more common options for DC coils are Metal Oxide Varistors (MOV) or TVS diodes. These devices should be connected across the driver (PLC output) for best protection as shown below. The optimum voltage rating for the suppressor is the lowest rated voltage available that will NOT conduct at the supply voltage, while allowing a safe margin.

AutomationDirect's ZL-TSD8-24 transorb module is a good choice for 24VDC circuits. It is a bank of 8 uni-directional 30V TVS diodes. Since they are uni-directional, be sure to observe the polarity during installation. MOVs or bi-directional TVS diodes would install at the same location, but have no polarity concerns.

ZL-TSD8-24
Transorb Module

DC MOV or TVS Diode Circuit

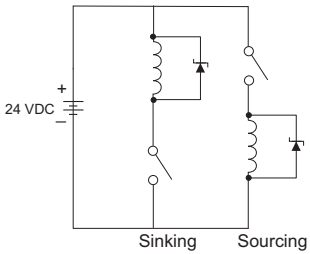

AC Coils:

Two options for AC coils are MOVs or bi-directional TVS diodes. These devices are most effective at protecting the driver from a transient voltage when connected across the driver (PLC output) but are also commonly connected across the coil. The optimum voltage rating for the suppressor is the lowest rated voltage available that will NOT conduct at the supply voltage, while allowing a safe margin.

AutomationDirect's ZL-TSD8-120 transorb module is a good choice for 120VAC circuits. It is a bank of eight bi-directional 180V TVS diodes.

ZL-TSD8-120
Transorb Module

AC MOV or Bi-Directional Diode Circuit

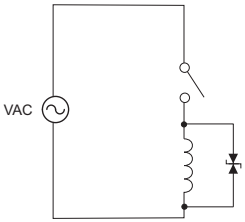

NOTE: *Manufacturers of devices with coils frequently offer MOV or TVS diode suppressors as an add-on option which mount conveniently across the coil. Before using them, carefully check the suppressor ratings. Just because the suppressor is made specifically for that part does not mean it will reduce the transient voltages to an acceptable level.*

For example, a MOV or TVS diode rated for use on 24–48 VDC coils would need to have a high enough voltage rating to NOT conduct at 48V. That suppressor might typically start conducting at roughly 60VDC. If it were mounted across a 24V coil, transients of roughly 84V (if sinking output) or -60V (if sourcing output) could reach the PLC output. Many semiconductor PLC outputs cannot tolerate such levels.

Notes:

Do-more Product Weight Table

In This Appendix...

Do-more Product Weight Table A-2

Do-more Product Weight Table

A

CPUs	Weight
H2-DM1	1.8 oz. (51g)
H2-DM1E	2.1 oz. (60g)
I/O Bases	
D2-03B-1	12.3 oz. (350g)
D2-03BDC1-1	11.4 oz. (322g)
D2-04B-1	13.4 oz. (381g)
D2-04BDC1-1	12.5 oz. (354g)
D2-06B-1	14.4 oz. (410g)
D2-06BDC1-1	13.8 oz. (392g)
D2-06BDC2-1	13.8 oz. (392g)
D2-09B-1	18.6 oz. (530g)
D2-09BDC1-1	18.3 oz. (522g)
D2-09BDC2-1	19 oz. (530g)
DC Input Modules	
D2-08ND3	2.3 oz. (65g)
D2-16ND3-2	2.3 oz. (65g)
D2-32ND3	2.1oz. (60g)
D2-32ND3-2	2.1oz. (60g)
AC Input Modules Weight	
D2-08NA-1	2.5 oz. (70g)
D2-08NA-2	2.5 oz. (70g)
D2-16NA	2.4 oz. (68g)
DC Input/Relay Output Module	
D2-08CDR	3.5 oz. (100g)

DC Output Modules	
D2-04TD1	2.8 oz. (80g)
D2-08TD1	2.3 oz. (65g)
D2-08TD2	2.1 oz. (60g)
D2-16TD1-2	2.3 oz. (65g)
D2-16TD2-2	2.8 oz. (80g)
F2-16TD1P	2.0 oz. (56g)
F2-16TD2P	2.0 oz. (56g)
D2-32TD1	2.1oz. (60g)
D2-32TD2	2.1 oz. (60g)
AC Output Modules	
D2-08TA	2.8 oz. (80g)
F2-08TA	3.5 oz. (99g)
D2-12TA	2.8 oz. (80g)
Relay Output Modules	
D2-04TRS	2.8 oz. (80g)
D2-08TR	3.9 oz. (114g)
D2-12TR	4.6 oz. (130g)
F2-08TR	5.5 oz. (156g)
F2-08TRS	5.5 oz. (156g)
CPU-Slot Controllers	
H2-EBC100	1.6 oz. (45g)
H2-EBC-F	2.1 oz. (60g)

Analog Modules Weight	
F2-04AD-1	3.0 oz (86g)
F2-04AD-2	3.0 oz (86g)
F2-08AD-1	3.0 oz (86g)
F2-08AD-2	4.2 oz (118g)
F2-02DA-1L	2.8 oz. (80g)
F2-02DA-2L	2.8 oz. (80g)
F2-08DA-1	2.8 oz. (80g)
F2-08DA-2	3.8 oz. (109g)
F2-02DAS-1	3.8 oz. (109g)
F2-02DAS-2	3.8 oz. (109g)
F2-4AD2DA	4.2 oz. (118g)
F2-8AD4DA-1	4.2 oz. (118g)
F2-8AD4DA-2	4.2 oz. (118g)
F2-04RTD	3.0 oz (86g)
F2-04THM	3.0 oz (86g)
Specialty Modules	
H2-CTRIO	2.3 oz. (65g)
H2-CTRIO2	2.2 oz. (62g)
H2-ECOM100	1.5 oz. (43g)
H2-ECOM-F	5.5 oz. (156g)
H2-ERM(100)	1.5 oz. (43g)
H2-ERM-F	5.5 oz. (156g)
H2-SERIO	1.5 oz. (43g)
H2-SERIO-4	1.6 oz. (45g)
F2-08SIM	2.5 oz. (70g)

European Union Directives (CE)

In This Appendix...

European Union (EU) Directives B-2
Basic EMC Installation Guidelines B-5

European Union (EU) Directives

NOTE: *The information contained in this section is intended as a guideline and is based on our interpretation of the various standards and requirements. Since the actual standards are issued by other parties, and in some cases governmental agencies, the requirements can change over time without advance warning or notice. Changes or additions to the standards can possibly invalidate any part of the information provided in this section.*

This area of certification and approval is absolutely vital to anyone who wants to do business in Europe. One of the key tasks that faced the EU member countries and the European Economic Area (EEA) was the requirement to bring several similar yet distinct standards together into one common standard for all members. The primary purpose of a single standard was to make it easier to sell and transport goods between the various countries and to maintain a safe working and living environment. The Directives that resulted from this merging of standards are now legal requirements for doing business in Europe. Products that meet these Directives are required to have a CE mark to signify compliance.

Member Countries

As of January 1, 2015, the members of the EU are Austria, Belgium, Bulgaria, Croatia, Republic of Cyprus, Czech Republic, Denmark, Estonia, Finland, France, Germany, Greece, Hungary, Ireland, Italy, Latvia, Lithuania, Luxembourg, Malta, Netherlands, Poland, Portugal, Romania, Slovakia, Slovenia, Spain, Sweden, and United Kingdom. Iceland, Liechtenstein, and Norway together with the EU members make up the European Economic Area (EEA) and all are covered by the Directives.

Applicable Directives

There are several Directives that apply to our products. Directives may be amended, or added, as required.

- **Electromagnetic Compatibility Directive (EMC)** — this Directive attempts to ensure that devices, equipment, and systems have the ability to function satisfactorily in an electromagnetic environment without introducing intolerable electromagnetic disturbance to anything in that environment.
- **Machinery Safety Directive** — this Directive covers the safety aspects of the equipment, installation, etc. There are several areas involved, including testing standards covering both electrical noise immunity and noise generation.
- **Low Voltage Directive (LVD)** — this Directive is also safety related and covers electrical equipment that has voltage ranges of 50–1000VAC and/or 75–1500VDC.
- **Battery Directive** — this Directive covers the production, recycling, and disposal of batteries.

Compliance

Certain standards within each Directive already require mandatory compliance. The EMC Directive, which has gained the most attention, became mandatory as of January 1, 1996. The Low Voltage Directive became mandatory as of January 1, 1997.

Ultimately, we are all responsible for our various pieces of the puzzle. As manufacturers, we must test our products and document any test results and/or installation procedures that are necessary to comply with the Directives. As an end user, you are responsible for installing the products applying "good engineering practices" and in a manner which will ensure compliance is maintained.

You are also responsible for testing any combinations of products that may (or may not) comply with the Directives when used together. The end user of the products must comply with any Directives that may cover maintenance, disposal, etc. of equipment or various components. *Although we strive to provide the best assistance available, it is impossible for us to test all possible configurations of our products with respect to any specific Directive. Because of this, it is ultimately your responsibility to ensure that your machinery (as a whole) complies with these Directives and to keep up with applicable Directives and/or practices that are required for compliance.*

PLC systems manufactured by Koyo Electronics Industries, FACTS Engineering or HOST Engineering, when properly installed and used, conform to the Electromagnetic Compatibility (EMC), Low Voltage Directive, and Machinery Directive requirements of the following standards.

- **EMC Directive Standards Relevant to PLCs**
  EN50081–1 Generic emission standard for residential, commercial, and light industry
  EN50081–2 Generic emission standard for industrial environment.
  EN50082–1 Generic immunity standard for residential, commercial, and light industry
  EN50082–2 Generic immunity standard for industrial environment.
- **Low Voltage Directive Standards Applicable to PLCs**
  EN61010–1 Safety requirements for electrical equipment for measurement, control, and laboratory use.
- **Product Specific Standard for PLCs**
  EN61131–2 Programmable controllers, equipment requirements and tests. This standard replaces the above generic standards for immunity and safety. However, the generic emissions standards must still be used in conjunction with the following standards:
  -EN 61000-3-2 Harmonics
  -EN 61000-3-2 Fluctuations
- **Warning on Electrostatic Discharge (ESD)**
  We recommend that all personnel take necessary precautions to avoid the risk of transferring static charges to inside the control cabinet, and clear warnings and instructions should be provided on the cabinet exterior. Such precautions may include, the use of earth straps, similar devices or the powering off of the equipment inside the enclosure before the door is opened.
- **Warning on Radio Interference (RFI)**
  This is a class A product. In a domestic environment this product may cause radio interference in which case the user may be required to take adequate measures.

General Safety

- External switches, circuit breaker or external fusing, are required for these devices.
- The switch or circuit breaker should be mounted near the PLC equipment.

AutomationDirect is currently in the process of changing their testing procedures from the generic standards to the product specific standards.

Special Installation Manual

The installation requirements to comply with the requirements of the Machinery Directive, EMC Directive and Low Voltage Directive are slightly more complex than the normal installation requirements found in the United States. To help with this, we have published a special manual which you can order or download from our website:

- **DA–EU–M** – EU Installation Manual that covers special installation requirements to meet the EU Directive requirements. Order this manual to obtain the most up-to-date information.

Other Sources of Information

Although the EMC Directive gets the most attention, other basic Directives, such as the Machinery Directive and the Low Voltage Directive, also place restrictions on the control panel builder. Because of these additional requirements it is recommended that the following publications be purchased and used as guidelines:

- BSI publication BS TH 42073: November 2000 – covers the safety and electrical aspects of the Machinery Directive
- EN 60204–1:2006 – Safety of Machinery; General electrical requirements for machinery, including Low Voltage and EMC considerations
- IEC 61000–5–2: EMC earthing and cabling requirements
- IEC 61000–5–1: EMC general considerations

It may be possible for you to obtain this information locally; however, the official source of applicable Directives and related standards is:

Publications Office
2, rue Mercier
2985 Luxembourg
LUXEMBOURG

Quickest contact is via the web at: **http://ec.europa.eu/growth/single-market/european-standards/harmonised-standards**.

Another source is the British Standards Institution at:

British Standards Institution – Sales Department, Linford Wood:

Milton Keynes, MK14 6LE, United Kingdom.

The quickest contact is via the web at www.bsigroup.com

Basic EMC Installation Guidelines

Enclosures

The simplest way to meet the safety requirements of the Machinery and Low Voltage Directives is to house all control equipment in an industry standard lockable steel enclosure. This normally has an added benefit because it will also help ensure that the EMC characteristics are well within the requirements of the EMC Directive. Although the RF emissions from the PLC equipment, when measured in the open air, are well below the EMC Directive limits, certain configurations can increase emission levels. Holes in the enclosure, for the passage of cables or to mount operator interfaces, will often increase emissions.

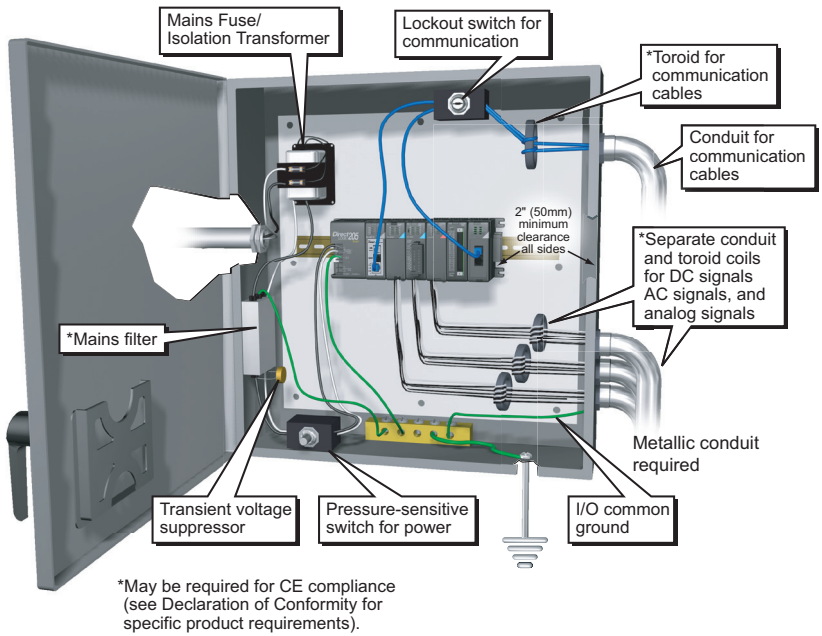

*May be required for CE compliance (see Declaration of Conformity for specific product requirements).

Electrostatic Discharge (ESD)

We specify in all declarations of conformity that our products are installed inside an industrial enclosure using metallic conduit for external wire runs; therefore, we test the products in a typical enclosure. However, we would like to point out that although our products operate normally in the presence of ESD, this is only the case when mounted within an enclosed industrial control cabinet. When the cabinet is open during installation or maintenance, the equipment and or programs may be at risk of damage from ESD carried by personnel.

We therefore recommend that all personnel take necessary precautions to avoid the risk of transferring static electricity to components inside the control cabinet. If necessary, clear warnings and instructions should be provided on the cabinet exterior, such as recommending the use of earth straps of similar devices, or the powering off of equipment inside the enclosure.

AC Mains Filters

The DL205 AC powered base power supplies require extra mains filtering to comply with the EMC Directive on conducted RF emissions. All PLC equipment has been tested with filters from Schaffner, which reduce emissions levels if the filters are properly grounded (earth ground). A filter with a current rating suitable to supply all PLC power supplies and AC input modules should be selected. We suggest the FN2080 for Do-more systems.

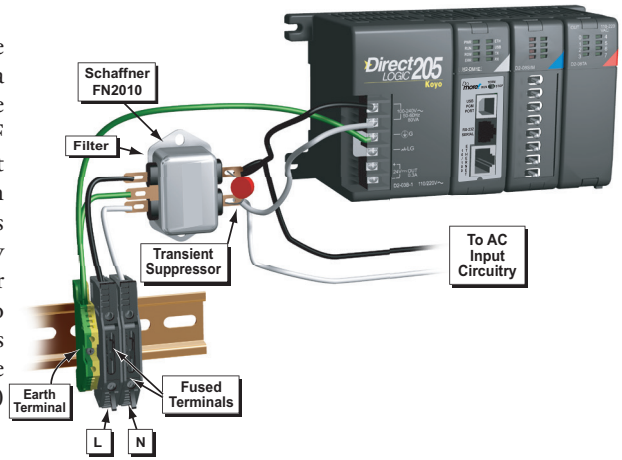

NOTE: *Very few mains filters can reduce problem emissions to negligible levels. In some cases, filters may increase conducted emissions if not properly matched to the problem emissions.*

Suppression and Fusing

In order to comply with the fire risk requirements of the Low Voltage and Machinery Directive electrical standards (EN 61010–1 and EN 60204–1), by limiting the power into "unlimited" mains circuits with power leads reversed, it is necessary to fuse both AC and DC supply inputs. You should also install a transient voltage suppressor across the power input connections of the PLC. Choose a suppressor such as a metal oxide varistor, with a rating of 275VAC working voltage for 230V nominal supplies (150VAC working voltage for 115V supplies) and high energy capacity (eg. 140 joules).

Transient suppressors must be protected by fuses and the capacity of the transient suppressor must be greater than the blow characteristics of the fuses or circuit breakers to avoid a fire risk. A recommended AC supply input arrangement for Koyo PLCs is to use twin 3 amp TT fused terminals with fuse blown indication, such as DINnectors DN–F10L terminals, or twin circuit breakers, wired to a Schaffner FN2010 filter or equivalent, with high energy transient suppressor soldered directly across the output terminals of the filter. PLC system inputs should also be protected from voltage impulses by deriving their power from the same fused, filtered, and surge-suppressed supply.

Internal Enclosure Grounding

A heavy-duty star earth terminal block should be provided in every cubicle for the connection of all earth ground straps, protective earth ground connections, mains filter earth ground wires, and mechanical assembly earth ground connections. This should be installed to comply with safety and EMC requirements, local standards, and the requirements found in IEC 1000–5–2. The Machinery Directive also requires that the common terminals of PLC input modules, and common supply side of loads driven from PLC output modules should be connected to the protective earth ground terminal.

Equipotential Grounding

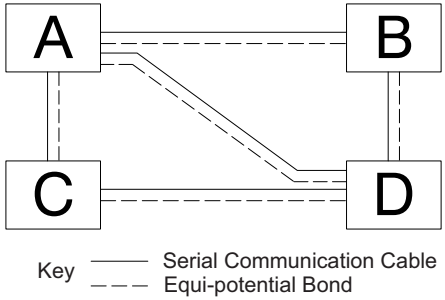

Adequate site earth grounding must be provided for equipment containing modern electronic circuitry. The use of isolated earth electrodes for electronic systems is forbidden in some countries. Make sure you check any requirements for your particular destination. IEC 1000–5–2 covers equipotential bonding of earth grids adequately, but special attention should be given to apparatus and control cubicles that contain I/O devices, remote I/O racks, or have inter-system communications with the primary PLC system enclosure. An equipotential bond wire must be provided alongside all serial communications cables, and to any separate items of the plant which contain I/O devices connected to the PLC. The diagram shows an example of four physical locations connected by a communications cable.

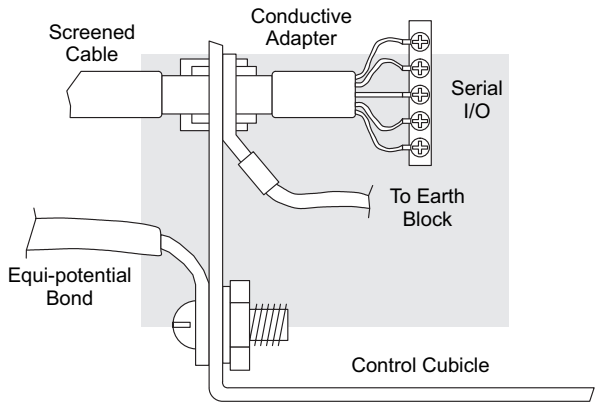

Communications and Shielded Cables

Good quality 24 AWG minimum twisted-pair shielded cables, with overall foil and braid shields are recommended for analog cabling and communications cabling outside of the PLC enclosure. To date it has been a common practice to only provide an earth ground for one end of the cable shield in order to minimize the risk of noise caused by earth ground loop currents between apparatus. The procedure of only grounding one end, which primarily originated as a result of trying to reduce hum in audio systems, is no longer applicable to the complex industrial environment. Shielded cables are also efficient emitters of RF noise from the PLC system, and can interact in a parasitic manner in networks and between multiple sources of interference.

The recommendation is to use shielded cables as electrostatic "pipes" between apparatus and systems, and to run heavy gauge equipotential bond wires alongside all shielded cables. When a shielded cable runs through the metallic wall of an enclosure or machine, it is recommended in IEC 1000–5–2 that the shield should be connected over its full perimeter to the wall, preferably using a conducting adapter, and not via a pigtail wire connection to an earth ground bolt. Shields must be connected to every enclosure wall or machine cover that they pass through.

Analog and RS232 Cables

Providing an earth ground for both ends of the shield for analog circuits provides the perfect electrical environment for the twisted pair cable as the loop consists of signal and return, in a perfectly balanced circuit arrangement, with connection to the common of the input circuitry made at the module terminals. RS232 cables are handled in the same way.

Multidrop Cables

RS422 twin twisted pair, and RS485 single twisted pair cables also require a 0V link, which has often been provided in the past by the cable shield. It is now recommended that you use triple twisted pair cabling for RS422 links, and twin twisted pair cable for RS485 links. This is because the extra pair can be used as the 0V inter-system link. With loop DC power supplies earth grounded in both systems, earth loops are created in this manner via the inter-system 0v link. The installation guides encourage earth loops, which are maintained at a low impedance by using heavy equipotential bond wires. To account for non–European installations using single-end earth grounds, and sites with far from ideal earth ground characteristics, we recommend the addition of 100 ohm resistors at each 0V link connection in network and communications cables.

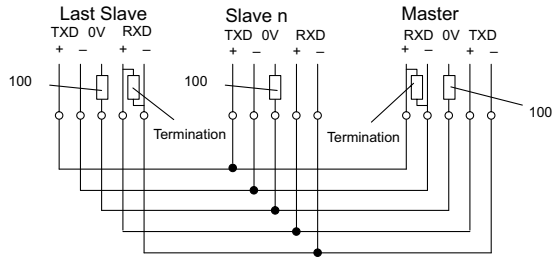

Shielded Cables within Enclosures

When you run cables between PLC items within an enclosure which also contains susceptible electronic equipment from other manufacturers, remember that these cables may be a source of RF emissions. There are ways to minimize this risk. Standard data cables connecting PLCs and/or operator interfaces should be routed well away from other equipment and their associated cabling. You can make special serial cables where the cable shield is connected to the enclosure's earth ground at both ends, the same way as external cables are connected.

Analog Modules and RF Interference

All AutomationDirect products are tested to withstand field strength levels up to 10V/m, which is the maximum required by the relevant EU standards. While all products pass this test, analog modules will typically exhibit deviations of their readings. This is quite normal, however, systems designers should be aware of this and plan accordingly.

When assembling a control system using analog modules, these issues must be adhered to and should be integrated into the system design. This is the responsibility of the system builder/commissioner.

Network Isolation

For safety reasons, it is a specific requirement of the Machinery Directive that a keyswitch must be provided that isolates any network input signal during maintenance, so that remote commands cannot be received that could result in the operation of the machinery. The FA–ISOCON does not have a keyswitch! Use a keylock and switch on your enclosure which when open removes power from the FA–ISOCON. To avoid the introduction of noise into the system, any keyswitch assembly should be housed in its own earth grounded steel box and the integrity of the shielded cable must be maintained.

Again, for further information on EU directives we recommend that you get a copy of our EU Installation Manual (DA–EU–M). Also, if you are connected to the World Wide Web, you can check the EU Commission's official site at: www.europa.eu/index_en.htm.

DC Powered Versions

Due to slightly higher emissions radiated by the DC powered versions of the Do-more H2 Series PLC, and the differing emissions performance for different DC supply voltages, the following stipulations must be met:

- The PLC must be housed within a metallic enclosure with a minimum amount of orifices.
- I/O and communications cabling exiting the cabinet must be contained within metallic conduit/trunking.

Items Specific to the Do-more H2 Series PLC

- The rating between all circuits in this product are rated as basic insulation only, as appropriate for single fault conditions.
- There is no isolation offered between the PLC and the analog inputs of this product.
- It is the responsibility of the system designer to earth one side of all control and power circuits, and to earth the braid of screened cables.
- This equipment must be properly installed while adhering to the guidelines of the in house CPU installation manual DA–EU–M, and the installation standards IEC 61000–5–1, IEC 61000–5–2 and IEC 61131–4.
- It is a requirement that all PLC equipment must be housed in a protective steel enclosure, which limits access to operators by a lock and power breaker. If access is required by operators or untrained personnel, the equipment must be installed inside an internal cover or secondary enclosure. A warning label must be used on the front door of the installation cabinet as follows: Warning: Exposed terminals and hazardous voltages inside.
- It should be noted that the safety requirements of the machinery directive standard EN60204–1 state that all equipment power circuits must be wired through isolation transformers or isolating power supplies, and that one side of all AC or DC control circuits must be earthed.
- Both power input connections to the PLC must be separately fused using 3 amp T-type anti–surge fuses, and a transient suppressor fitted to limit supply overvoltages.
- If the user is made aware by notice in the documentation that if the equipment is used in a manner not specified by the manufacturer, the protection provided by the equipment may be impaired.