SW3A9030H241-2x - Controller

Installation instructions

Refer to installation use and maintenance manual for more information.
Available user manual at link http://www.everelettronica.it/manhw.html

2 phase bipolar stepper drive technical data

- *AC supply: 100 ÷ 240 Vac (monophase)*
- *Phase current: up to 3.0 Arms (4.2 Apk)*
- *Chopper frequency: ultrasonic 40 kHz*
- *Stepless Control Technology (65536 position per turn)*
- *Protections against: over current, over/under voltage, overheating, short circuit between motor phase-to-phase and phase-to-ground*
- *EtherCAT communication interfaces*
- *Service SCI interface for programming and real time debugging*
- *Safe Torque Off (STO) inputs (opto-coupled)*
- *4 digital inputs (opto-coupled)*
- *2 digital outputs (opto-coupled)*
- *Dimensions: 180.7 x 130 x 50 mm (without connectors)*
- *Protection degree: IP20*
- *Pullution degree 2*
- *Overvoltage Category III*
- *Working temperature 5°C ÷ 40°C; Storage temperature -25°C ÷ 55°C*
- *Humidity: 5% ÷ 85% not condensing*

Mechanical data

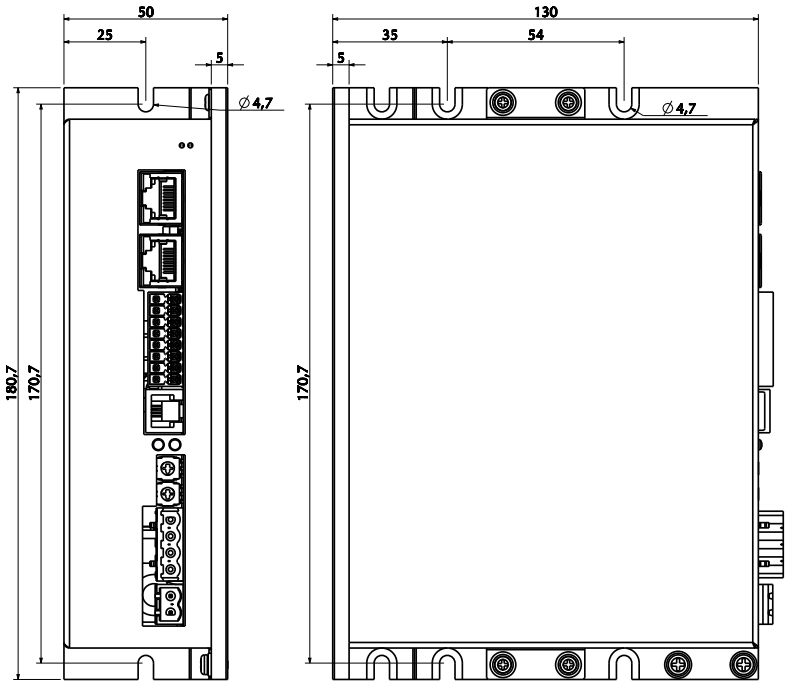

Models

Modells code	Characteristics
SW3A9030H241-20	With Roto-Switches
SW3A9030H241-21	Without Roto-Switches

System connections

Connectors:

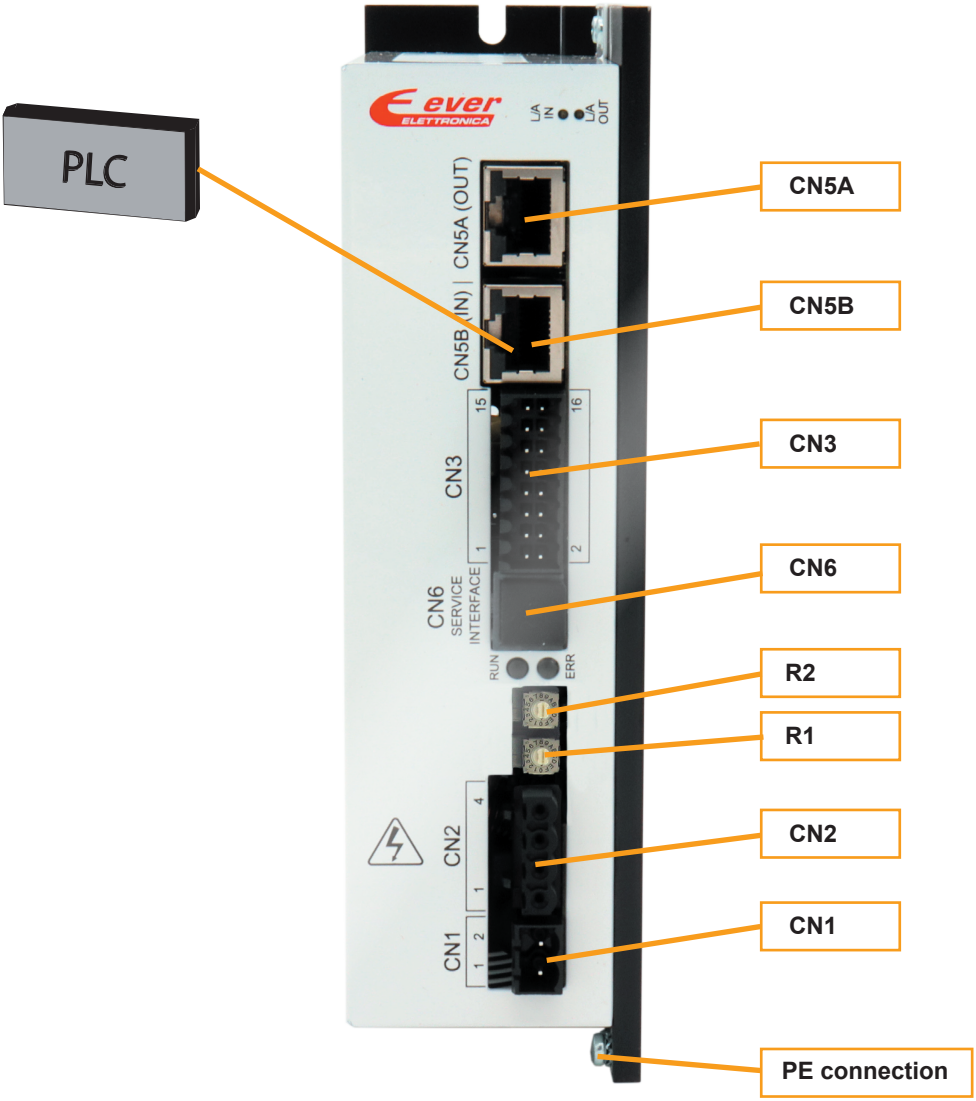

System connection

CN1: AC Power supply

2 positions, pitch 5.08mm, PCB header connector

CN1.1	ACin	PWR_IN	AC power supply input
CN1.2	ACin	PWR_IN	AC power supply input

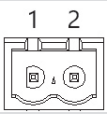

CN2: Motor connection

4 position, pitch 5.08mm single row, PCB socket connector

CN2.1	A	PWR_OUT	Motor phase A
CN2.2	A/	PWR_OUT	Motor phase A/
CN2.3	B	PWR_OUT	Motor phase B
CN2.4	B/	PWR_OUT	Motor phase B/

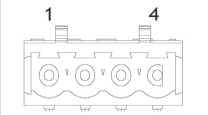

CN6: Service SCI Interface

RJ11, 6P4C, PCB header connector

CN6.1	TX/RX	Transmit / Receive Line
CN6.2	$\overline{\text{DE}}$/RE	Drive Enable Negated / Receive Enable
CN6.3	+5V	+5V power out
CN6.4	GND	GND power out

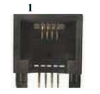

NOTE: This connection is <u>only</u> possible with hardware and software provided by Ever Elettronica.

CN3: Digital Inputs / Outputs

16 positions, pitch 3.5mm double row, PCB header connector

CN3.1	+ IN3	DIG_IN	Digital input 3 positive side
CN3.2	- IN3	DIG_IN	Digital input 3 negative side
CN3.3	+ IN2	DIG_IN	Digital input 2 positive side
CN3.4	- IN2	DIG_IN	Digital input 2 negative side
CN3.5	+ IN1	DIG_IN	Digital input 1 positive side
CN3.6	- IN1	DIG_IN	Digital input 1 negative side
CN3.7	+ IN0	DIG_IN	Digital input 0 positive side
CN3.8	- IN0	DIG_IN	Digital input 0 negative side
CN3.9	DIG_OUT0	DIG_OUT	PNP digital output OUT0
CN3.10	DIG_OUT1	DIG_OUT	PNP digital output OUT1
CN3.11	V-OUT	PWR_IN	24 Vdc supply for digital output
CN3.12	n.c.	n.c.	Not connected
CN3.13	STO1 +	PWR_IN	STO1 input positive side
CN3.14	STO1 -	PWR_IN	STO1 input negative side
CN3.15	STO2 +	PWR_IN	STO2 input positive side
CN3.16	STO2 -	PWR_IN	STO2 input negative side

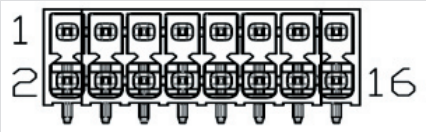

STO inputs are 24 Vdc MANDATORY and ISOLATED

CN5A and CN5B: EtherCAT Interface

RJ45, 8 position shielded, PCB header connector

Dual RJ45 connectors (IN-OUT)
100 BASE-TX (100 Mb/sec) ports
Accept standard Ethernet cable (CAT5 or higher)

CN5B (IN)

CN5A (OUT)

Service SCI connection

This connection is only possible with hardware and software provided by Ever Elettronica.
Kit code: EVER-PGM-2.

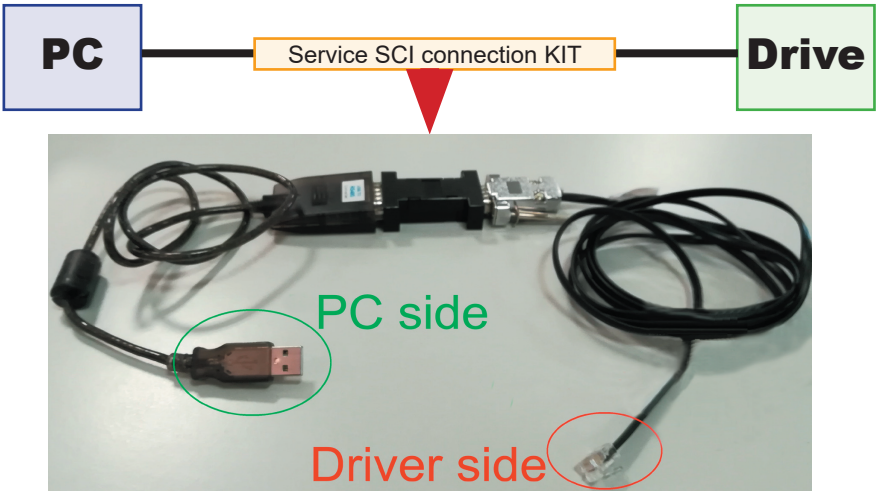

Roto-Switches settings (only for SW3A9030H241-20 version)

EtherCAT ID Selection (Hexadecimal Value)										
R1 x 16 (MSD)	0	0	0	0	...	2	2	...	F	F
R2 x 1 (LSD)	0	1	2	3	...	C	D	...	E	F
ECAT-ID #	SW setting (default)	1	2	3	...	44	45	...	245	255

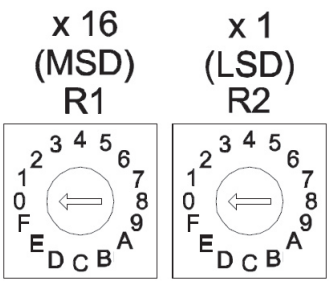

R1 (MSD): Most Significan Digit that must by multiplied per 16
R2 (LSD): Least Significant Digit that must by multiplied per 1

Example: 5C
R1 = 5 -----> 5 x 16 = 80
R2 = C -----> 12 x 1 = 12
EtherCAT ID = 92

N.B.: if Roto-Switches are not present, EtherCAT ID could be selected by software using Service SCI interface.

Working Status (LED)

	Visualization status		Description
1		Green OFF	Bus status 'Init'
2		Green ON	Bus status 'Operational'
3		Green BLINKING	Bus status 'Pre-Operational'
4		Green Single Flash	Bus status 'Safe-Operational'
5		Blue ON	Error: connect with Service SCI kit and check with software
6		Blue ON Yellow ON	Drive in boot mode. A new firmware should be downloaded to drive
7		Blue ON Red BLINKING (200 ms)	Initialization phase. Should last few seconds. While in this condition the drive is not fully operational.
8		Yellow ON	Missing setting of Inominal
9		Yellow BLINKING (500 ms)	Warning: connect with Service SCI kit and check with software
10		Red ON	Protection: motor is in open phase condition
11		Red BLINKING (200 ms)	Current protection
12		Red ON (1 sec) Yellow 1 BLINK	Over/under voltage protection
13		Red ON (1 sec) Yellow 3 BLINK	Thermal protection
14		Red ON (1 sec) Yellow 4 BLINK	Motor Feedback Error
15		Red ON (1 sec) Yellow 5 BLINK	Missing Safe Torque Off
16		Red ON (1 sec) Yellow 6 BLINK	Motor Current Regulation is out of range
17		Red ON (1 sec) Yellow 7 BLINK	eePLC User Protection (generated by setting bit #0 of eePLC_User_Settings)

Note: Drive could be considered in a correct status if leds Red, Yellow and Blue are all OFF.
In general : - Led Blue indicates a software internal fault or a non-operative condition
- Led Red indicates an alarm or a drive protection
- Led Yellow indicates a warning

Power & Logic Supply connections

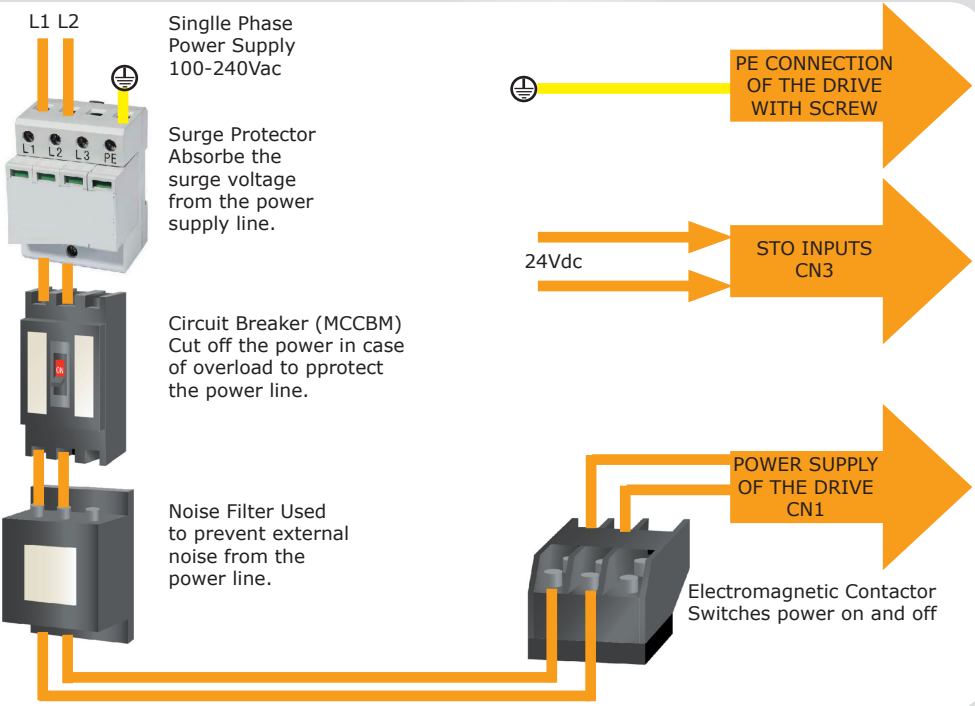

Safe Torque Off inputs (STO)

2 terminals, 24V compatible (optoisolated)

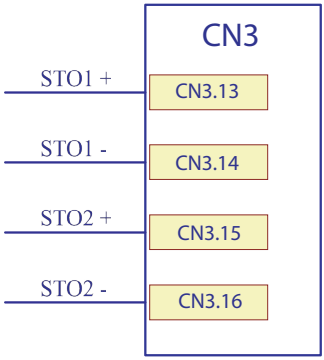

STO1	STO2	Drive Status	Motor Status
+24Vdc	+24Vdc	Enable	SW controlled
+24Vdc	Not connected	Disable	Stop for inertia
Not connected	+24Vdc	Disable	Stop for inertia
Not connected	Not connected	Disable	Stop for inertia

STO inputs are optoisolated

Principle of operation:

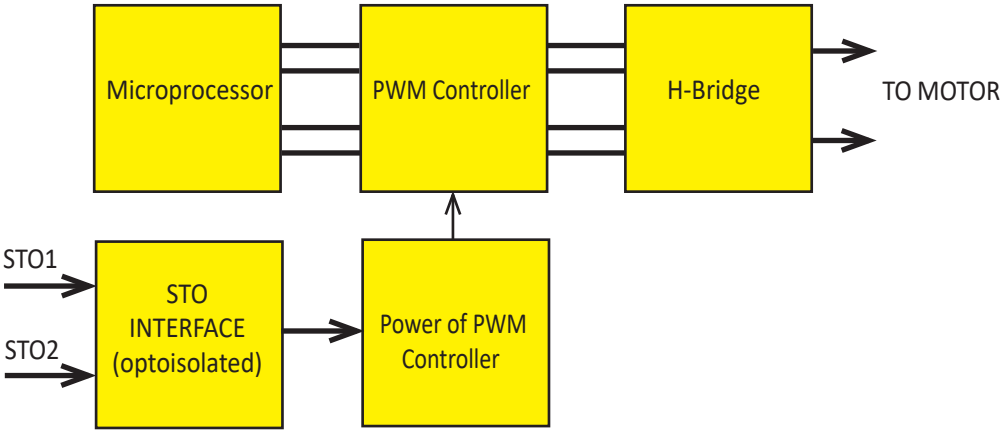

The drive has a safety feature that is designed to provide the Safe Torque Off (STO) function. Two inputs signlas are provided which, when not connected, prevent the upper and lower devices in the PWM outputs from being operated by the digital control core. This provides a positive OFF capability that cannot be overridden by the control firmware, or associated hardware components.
When both STO signals are activated (current is flowing in the input diodes of the optocouplers), the control core will be able to control the on/off state of the PWM outputs.

If not using the STO feature, both signals must be connected to a 24Vdc supply in order enabled the drive.

If a drive in operation mode is disabled by STO signal, it immediately finish to produce torque but the motor continues to run by inertia until it can stop.

Digital inputs connection

Differential PNP, NPN and Line Driver type

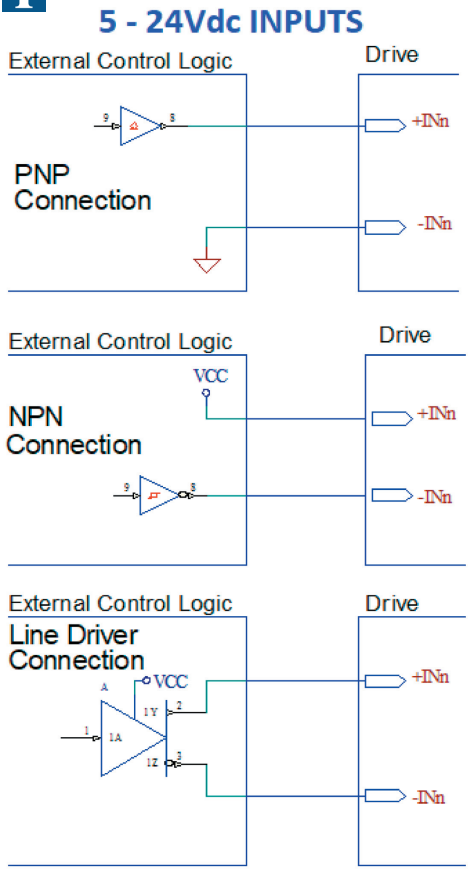

Characteristics	MIN.	MAX.	Unit
Supply voltage	5	24	Vdc
Inputs frequency	--	5	kHz
Threshold switching voltage	2.5	--	Vdc
Current at 5 Vdc	--	6	mA
Current at 24 Vdc	--	10	mA

Digital outputs connection

Digital outputs are PNP with V_{OUT}max=24Vdc, I_{OUT}max=100mA, Fmax = 1 kHz

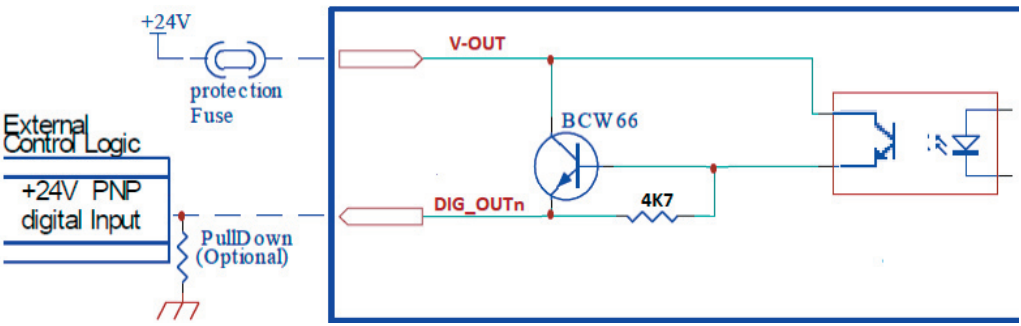

Mating connectors

Connector	Description
CN1	Phoenix 1758856
CN2	Phoenix 1731196
CN3	Weidemüller 1727690000
CN5A / CN5B	RJ45 8 positions (Ethernet standard cables CAT5 or higher)

Section of the cables

Function	Cable	
	Minimum	Maximum
Power supply and PE	0.5 mm² (AWG20)	2.5 mm² (AWG12)
Motor output	0.5 mm² (AWG20)	2.5 mm² (AWG12)
Inputs and Outputs	0.2 mm² (AWG24)	1.3 mm² (AWG16)
EtherCAT interfaces	Ethernet standard cables (CAT5 or higher)	

Verify the installation

- Check all connection: power supply and inputs/outputs.
- Make sure all settings right for the application.
- Make sure the power supply is suitable for the drive.
- If possible, remove the load from the motor shaft to avoid that wrong movements cause damage.
- Enable the current to the motor and verify the applied torque.
- Enable a movement of some steps and verify if the rotation direction is the desired one.
- Disconnect the power supply, connect the load on the motor and check the full functionality.

Drive's fault analysis

When any of the following situations occur, the drive is placed in a fault condition.

DEFECT	CAUSE	ACTION
Intervention of the thermal protection.	Can be caused by a heavy working cycle or a high current in the motor.	Improve the drive cooling by natural or fan air flow. Consider to use a motor with a higher torque vs current rating.
Intervention of the current protection.	Short circuit on the motor powering stage(s) of the drive.	Check motor windings and cables to remove the short circuits replacing faulty cables or motor if necessary.
Intervention of the over/under voltage protection.	Supply voltage out of range.	Check the value of the supply voltage.
Open phase motor protection.	Motor windings to drive not proper connection.	Check motor cables and connections to the drive.

When any of the following situations occur, the drive doesen't work and isn't placed in an error condition.

DEFECT	CAUSE	ACTION
Noisy motor movement with vibrations.	Can be caused by a lack of power supply to a phase of the motor or a poor regulation of the winding current.	Check the cables and connections of the motor and/or change the motor speed to avoid a resonance region.
The external fuse on the power supply of the drive is burned.	Can be caused by a wrong connection of the power supply.	Connect the power supply correctly and replace the fuse.
At high speed, the motor torque is not enough.	Can be due to a 'self-limitation' of motor current and torque.	Increase the motor current or increase the supply voltage (always within the limits of the motor).

EVER Elettronica
Via del Commercio, 2/4 - 9/11
Loc. San Grato Z. I
26900 - L O D I - Italy
Phone +39 0371 412318 - Fax +39 0371 412367
email:infoever@everelettronica.it
web: www.everelettronica.it