WIEGMANN

P.N. 33022

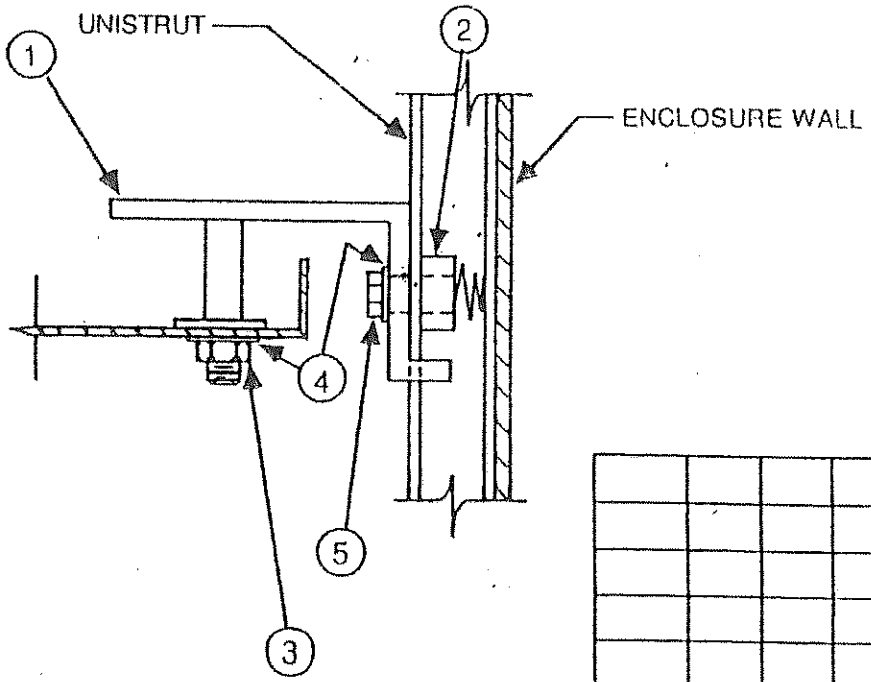

Section A-A

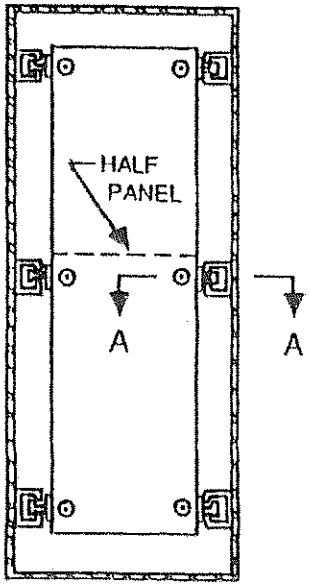

FRONT SECTION VIEW

NO SCALE #

Item	Qty	Qty	Qty	Description
1	6	4		Brackets
2	6	4		Clamping Nuts
3	6	4		3/8" Nuts
4	12	8		3/8" Washer
5	6	4		1" Hex Bolt
6	1	1		LOCK WASHER - 3/8" ETERNAL TOOTH
	X			WA-F1-H
		X		WA-F2-H

HUBBELL WIEGMANN

Installation Instructions Dwg 81-8A