NMO 522346-B		C	PRF	JPF	09-04-02
			ETABLI Issued	VERIFIE Checked	DATE Date

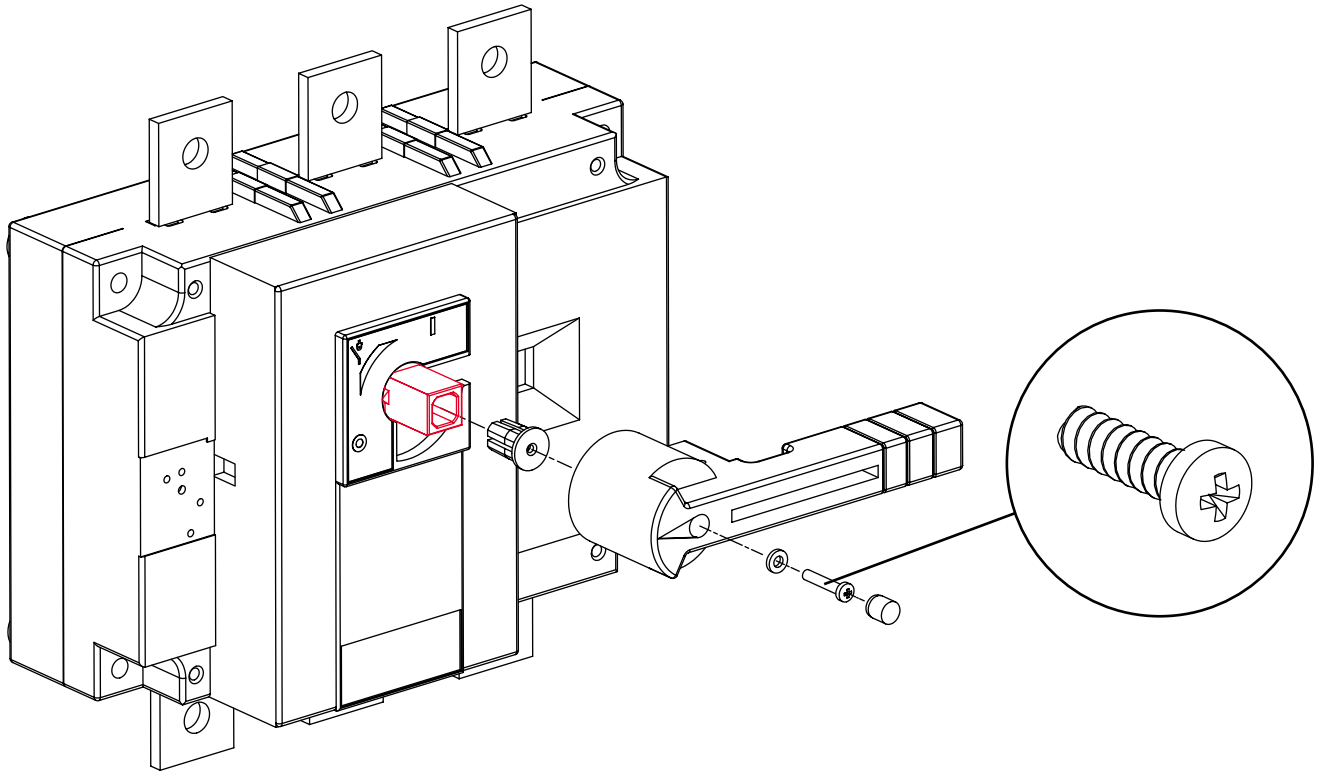

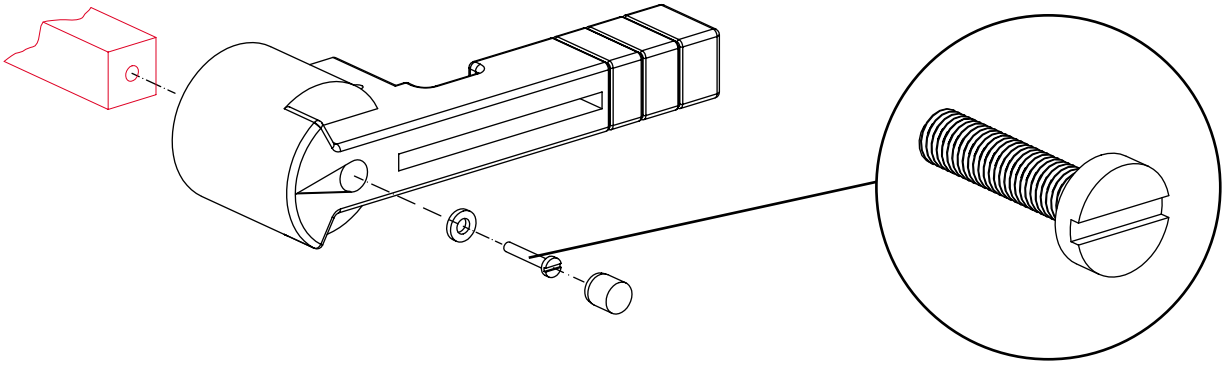

/ S blanc offset 80 g/m² / I Noire pantonne black C - Rouge pantone 485 U / F 210x297 / P 105x74,25 / Imp . HELIO SERVICE