CHAPTER 5: SERIAL COMMUNICATIONS

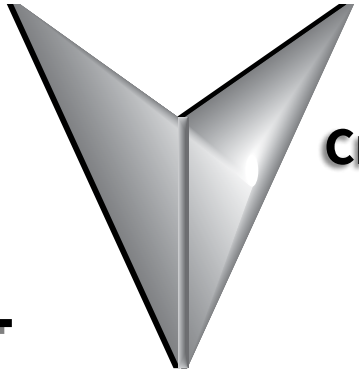

CHAPTER

5

TABLE OF CONTENTS

Chapter 5: Serial Communications

Serial RS-485 Communication Features 5–2

Communication Standards 5–2

Common Third-Party Modbus RTU Masters. 5–2

AutomationDirect PLCs as Modbus Master 5–3

RS-232C to RS-485 Conversion. 5–4

Communication Protocol 5–12

Drive Expansion Common Area Parameter 5–15

Drive Parameter Modbus Communication Addresses 5–24

Serial RS-485 Communication Features

This chapter details how to control an ACN series drive with a PLC or a computer using the RS-485 serial communication features. The ACN series drive terminals S+, S-, SG will accommodate an RS-485 connection, through which the drive can be controlled by a remote master device on an RS-485 network. RS-232 signals can be converted to RS-485 by using a separate converter.

The ACN AC drive communication address (station ID) is specified in parameter CM.01, and the remote master device can control each AC drive according to its individual communication address. The ACN drive serial communications utilizes the Modbus RTU protocol. The mode and serial network settings must be the same for all devices on a Modbus network. The Station IDs must all be unique. See "Setting Communication Parameters" on page 5–7 for more details.

NOTE: Ethernet connectivity for EtherNet/IP or Modbus TCP communication is possible with an optional communication card (ACN-ETH). Refer to Appendix C: Ethernet Module ACN-ETH for details

Communication Standards

Following the RS-485 communication standards, ACN series products exchange data with a PLC and computer. The RS-485 communication standards support the Multi-drop Link System and offer an interface that is strongly resistant to noise. Please refer to the following table for details about the communication standards.

Communication Standards	
Item	**Standard**
Communication method/ Transmission type	RS-485/Bus type, Multi-drop Link System
Drive type name	ACN Series
Number of connected drives/ Transmission distance	Maximum of 16 drives / Maximum1,200m (recommended distance: within 700m)
Recommended cable size	0.75mm^2, (18AWG), shielded type twisted-pair (STP) wire
Installation type	Dedicated terminals (S+/S-/SG) on the control terminal block
Power supply	Supplied by the drive - insulated power source from the drive's internal circuit
Communication speed	1,200/2,400/9,600/19,200/38,400/57,600/115,200 bps
Control procedure	Asynchronous communications system
Communication system	Half duplex system
Character system	Modbus-RTU: Binary
Stop bit length	1-bit/2-bit
Frame error check	2 bytes
Parity check	None/Even/Odd

Common Third-Party Modbus RTU Masters

- *Modbus Poll from www.modbustools.com*

AutomationDirect PLCs as Modbus Master

Serial Modbus-capable AutomationDirect PLCs can communicate with the ACN drive. Serial Modbus control is easier to accomplish from a PLC that has a built-in RS-485 port and supports dedicated Modbus messaging. [RS-232-only PLCs will require an RS-232/RS-485 converter (FA-ISOCON); and older PLCs may require programming to construct the Modbus strings.] We recommend PLCs with built-in RS-485 ports and dedicated Modbus serial commands: CLICK (with RS-485 ports), P1000, P2000, P3000, BRX/Do-more, DirectLogic (DL06, D2-260, or D2-262). Other PLC-Drive connectivity is possible: Please refer to the chart below

Typical ADC PLC to ACN Serial Communications Connectivity

Typical ADC PLC to ACN Serial Communications Connectivity Matrix*					
Recommended PLC Connectivity			Communication	Direct Cable	ACN
PLC	Port #	Port Type			Terminals
CLICK	3	3 screw terminals	RS-485	L19954 cable	S+ S- SG
D2-260	2	HD15	RS-485	D2-DSCBL-2	
D2-262	2	HD15	RS-485	D2-DSCBL-2	
DL06	2	HD15	RS-485	D2-DSCBL-2	
BRX/Do-more	RS-485	3 screw terminals	RS-485	L19954 cable	
Do-more H2-DM1	RS-232	RJ12	RS-232 to RS-485	FA-ISOCON with L19954 cable	
P1-550	RS-485	4 screw terminals	RS-485	L19954 cable	
P2-550	RS-485	3 screw terminals	RS-485	L19954 cable	
P3-530	RS-485	3 screw terminals	RS-485	L19954 cable	
P3-550	RS-485	3 screw terminals	RS-485	L19954 cable	
P3-550E	RS-485	3 screw terminals	RS-485	L19954 cable	
Other PLC Connectivity			Communication	Direct Cable	
D2-250-1	2	HD15	RS-485	D2-DSCBL-2	
D4-450/D4-454	1	DB25	RS-232 to RS-485	FA-ISOCON with L19954 cable	
DL05	2	RJ12	RS-232 to RS-485	FA-ISOCON with L19954 cable	
DL06 + DCM	2	HD15	RS-485	D2-DSCBL-2	
Do-more H2-DM1 + H2-SERIO-4	3	5 screw terminals	RS-485	L19954 cable	
Do-more T1H-DM1	RS-232	RJ12	RS-232 to RS-485	FA-ISOCON with L19954 cable	
P2-SCM	4	4 screw terminals	RS-485	L19954 cable	
P3-SCM	4	4 screw terminals	RS-485	L19954 cable	

**Ethernet connectivity for EtherNet/IP or Modbus TCP communication is possible with an optional communication card ACN-ETH. Refer to Appendix C: Ethernet Module ACN-ETH for details*

RS-232C to RS-485 Conversion

In an RS-485 communication system, the PLC or computer is the master device and the drive is the slave device. When using a computer as the master, the RS-232 converter must be integrated with the computer, so that it can communicate with the drive through the RS-232/RS-485 converter. Specifications and performance of converters may vary depending on the manufacturer, but the basic functions are identical. Please refer to the converter manufacturer's user manual for details about features and specifications. RS-232 signals can be converted to RS-485 by using a separate converter (see the FA-ISOCON drawings below).

Connect the wires and configure the communication parameters on the drive by referring to the following illustration of the communication system configuration.

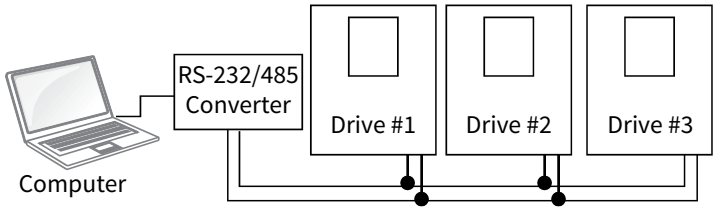

RS-232C to RS-485 Conversion

Many AutomationDirect PLCs have only RS-232C communication ports, and require an FA-ISOCON (RS-232C to RS-422/485 network adapter) in order to make an RS-485 connection.

NOTE: If an FA-ISOCON module is used, set the module dipswitches as required. Refer to the FA-ISOCON manual for more detailed information.

FA-ISOCON Switch Settings:

- *S21–S23: OFF, ON, ON (19200 baud)*
- *S24–S27: OFF (Automatic Network Transmit Enable)*
- *Terminate: ON (end of run term resistors)*
- *Bias (2): ON (end of run bias resistors)*
- *1/2 DPX (2): ON (RS-485 TXD/RXD jumpers)*

Helpful Hint: Some applications require that the FA-ISOCON baud rate is set faster than the drive/network baud rate.

FA-ISOCON RJ-12 Serial Comm Port A
RS-232 Input Port

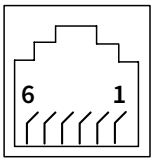

1: Signal Ground
2: CTS (input)
3: RXD (input)
4: TXD (output)
5: +5VDC in
6: Signal Ground

FA-ISOCON Wiring

RS-232 to RS-485 Conversion Wiring Schematic

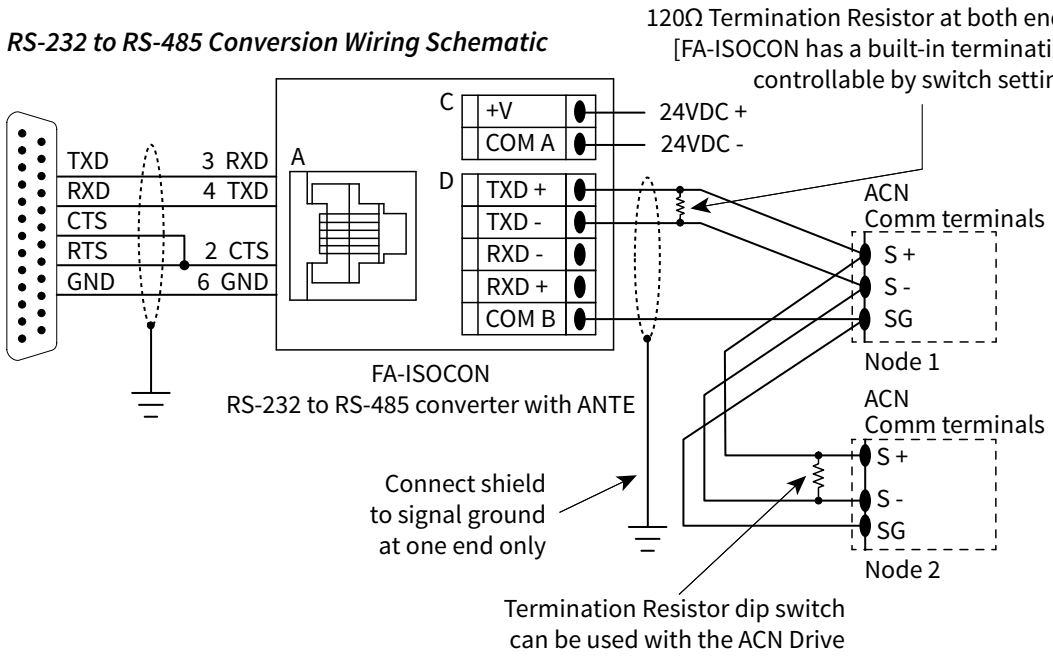

NOTE: For information regarding configuration of AutomationDirect PLCs or other PLCs, please refer to Appendix D: Safe Torque Off, or to the applicable PLC user manual for your application.

Communication Cable Connection

Make sure that the drive is turned off completely, and then connect the RS-485 communication cable to the S+/S-/SG terminals of the terminal block. The maximum number of drives you can connect is 16. For communication wiring, use shielded twisted pair (STP) cables. The maximum length of the communication cable is 1,200 meters, but it is recommended to use no more than 700 meters of communication cable to ensure stable communication. Please use a repeater to enhance the communication speed when using a communication cable longer than 1,200 meters or when using a large number of devices. A repeater is effective at reducing noise where smooth communication is required.

NOTE: Recommended RS-485 cable: Belden 9842, AutomationDirect L19954 series, or equivalent.

NOTE: RJ45 connector is for connection to LCD keypad or PC software only. Communication settings are fixed at 19,200bps, 8,N,1.

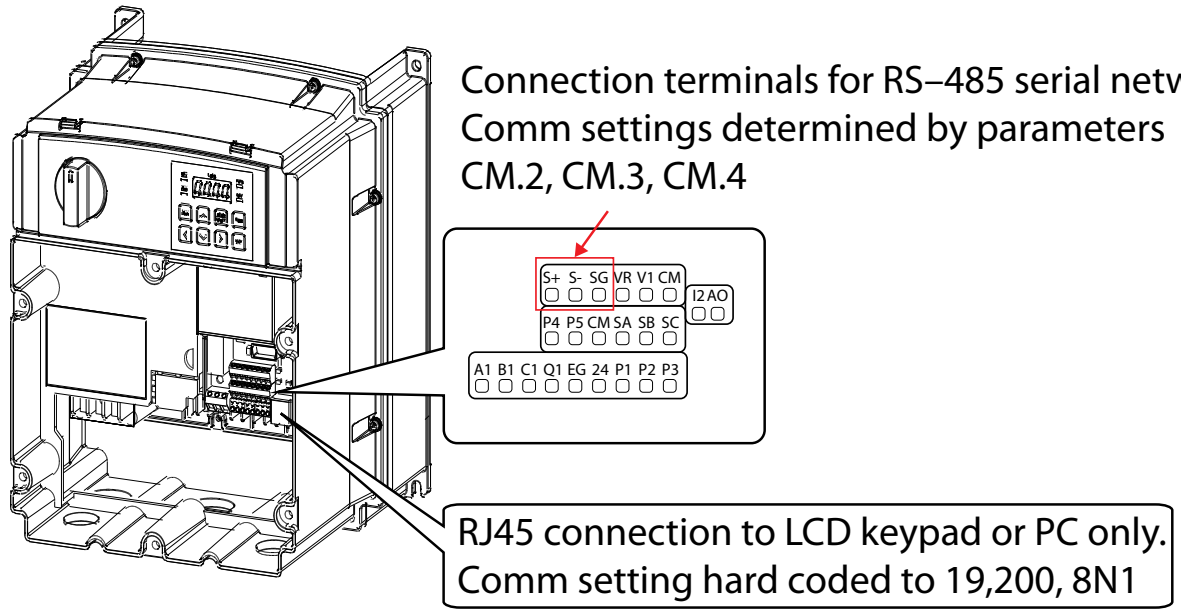

Setting Communication Parameters

Before proceeding with setting communication configurations, make sure that the communication cables are connected properly. Turn on the drive and set the communication parameters.

Setting Communication Parameters							
Parameter Group	Parameter Number	Name	LCD Display	Parameter Setting		Setting Range	Unit
CM	01	Built-in communication drive ID	Int485 St ID	1		1-250	-
	02	Built-in communication protocol	Int485 Proto	0	Modbus RTU	0	-
	03	Built-in communication speed	Int485 BaudR	3	9600 bps	0-7	-
	04	Built-in communication frame setting	Int485 Mode	0	D8/PN/S1	0-3	-
	05	Transmission delay after reception	Resp Delay	5		0-1000	ms

Communication Parameters Setting Details

Communication Parameters Setting Details			
Parameter	Description		
CM.01 Int485 St ID	Set the drive station ID between 1 and 250.		
CM.02 Int485 Proto	***Select one of the two built-in protocols: Modbus-RTU or LS INV 485.***		
	Setting		***Function***
	0	Modbus-RTU	Modbus-RTU compatible protocol
	2	Not supported	–
CM.03 Int485 BaudR	***Set a communication setting speed up to 115,200 bps.***		
	Setting		***Function***
	0		1,200 bps
	1		2,400 bps
	2		4,800 bps
	3		9,600 bps
	4		19,200 bps
	5		38,400 bps
	6		56 Kbps
	7		115 Kbps
CM.04 Int485 Mode	***Set a communication configuration. Set the data length, parity check method, and the number of stop bits.***		
	Setting		***Function***
	0	D8/PN/S1	8-bit data / no parity check / 1 stop bit
	1	D8/PN/S2	8-bit data / no parity check / 2 stop bits
	2	D8/PE/S1	8-bit data / even parity / 1 stop bit
	3	D8/PO/S1	8-bit data / odd parity / 1 stop bit

Communication Parameters Setting Details	
Parameter	**Description**
CM.05 Resp Delay	Set the response time for the slave (drive) to react to the request from the master. Response time is used in a system where the slave device response is too fast for the master device to process. Set this code to an appropriate value for smooth master-slave communication. 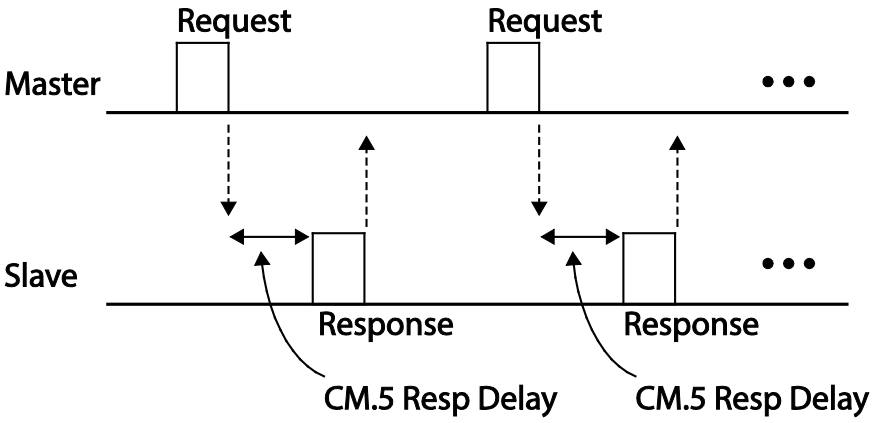

Setting Operation Command and Frequency

To select the built-in RS-485 communication as the source of command, set the Frq code to 6 (Int485) and set the DRV code to 3 (Int485). Then, set common area parameters for the operation command and frequency via communication.

Setting Operation Command and Frequency							
Parameter Group	**Parameter Number**	**Name**	**LCD Display**	**Parameter Setting**		**Setting Range**	**Unit**
Pr	12	Speed command loss operation mode	Lost Cmd Mode	1	Free-Run	0-5	-
	13	Time to determine speed command loss	Lost Cmd Time	1.0		0.1-120	s
	14	Operation frequency at speed command loss	Lost Preset F	0.00		Start frequency–Maximum frequency	Hz
OU	31	Multi-function relay 1	Relay 1	13	Lost Command	0-35	-
	33	Multi-function output 1	Q1 Define				
Operation	DRV	Command source	Cmd Source (DRV.06 on LCD)	3	Int485	0-5	-
	Frq	Frequency setting method	Freq Ref Src (DRV.07 on LCD)	6	Int485	0-12	-

Command Loss Protective Operation

Set the following parameters to determine the drive action in the event of a communication loss.

Command Loss Protective Operation			
Parameter Group	**Description**		
Pr.12 Lost Cmd Mode, Pr.13 Lost Cmd Time	Select the drive function that will occur after the communication loss time is expired (set in Pr.13).		
	Setting		Function
	0	None	The speed command immediately becomes the operation frequency without any protection function.
	1	Free-Run	The drive blocks output. The motor performs in free-run condition.
	2	Dec	The motor decelerates and then stops at the time set at Pr.07 (Trip Dec Time).
	3	Hold Input	The drive calculates the average input value for 10 seconds before the loss of the speed command and uses it as the speed reference.
	4	Hold Output	The drive calculates the average output value for 10 seconds before the loss of the speed command and uses it as the speed reference.
	5	Lost Preset	The drive operates at the frequency set at Pr. 14 (Lost Preset F).

Setting Virtual Multi-Function Input

Multi-function input can be controlled using a communication address (0h0385). Set codes CM.70–77 to the functions to operate, and then set the bit relevant to the function to 1 at 0h0385 to operate it. Virtual multi-function operates independently from In.65-69 analog multi-function inputs and cannot be set redundantly. Virtual multi-function input can be monitored using CM.86 (Virt DI Status). Before you configure the virtual multi-function inputs, set the DRV code according to the command source.

Setting Virtual Multi-Function Input							
Parameter Group	**Parameter Number**	**Name**	**LCD Display**	**Parameter Setting**		**Setting Range**	**Unit**
CM	70-77	Communication multi-function input x	Virtual DI x (x: 1-8)	0	None	0-49	-
	86	Communication multi-function input monitoring	Virt DI Status	-	-	-	-

Example: When sending the Forward and Reverse command by controlling virtual multi-function input in the common area via Int485, set the following:

1) *Set CMD= Fx/Rx-1*
   - » *For Forward motion: set CM.70 = FX and set address 0h0385 to 0h0001.*
   - » *For Reverse motion: Set CM.71 = Rx and set address 0h0385 to 0h0002.*

NOTE: The following are values and functions that are applied to address 0h0385

Values and functions that are applied to address 0h0385	
Setting	**Function**
0h0001	Forward operation (Fx)
0h0002	Reverse operation (Rx)
0h0000	Stop

Saving Parameters Defined by Communication

After changing settings in the common area parameters, it is best practice to complete the "Save Parameters" action to ensure all settings are recognized by the drive. This can be accomplished through comm address 0h03E0 or the LCD keypad parameter CNF.48.

If the drive is powered off after setting the common area parameters or keypad parameters via communication, the settings will be lost. Performing the "Save Parameters" operation immediately after setting common area parameters will prevent any data loss.

Set CNF-48 to 1 (Yes) to allow all the changes over comunication to be saved, so that the drive retains all the existing values even after the power has been turned off.

Setting address 0h03E0 to 0 and then setting it again to 1 via communication allows the existing parameter settings to be saved. However, setting address 0h03E0 to 1 and then setting it to 0 does not carry out the same function. Parameters defined by communication can only be saved using an LCD keypad.

Saving Parameters Defined by Communication							
Parameter Group	**Parameter Number**	**Name**	**LCD Display**	**Parameter Setting**		**Setting Range**	**Unit**
CNF (LCD keypad only)	48	Save parameters	Parameter Save	0	Yes	0-1	-
				1	No		

Total Memory Map for Communication

Total Memory Map for Communication		
Item	**Memory Map**	**Details**
Parameter registration type area	0h0100-0h01FF	Areas registered at CM.31–38 and CM.51–58
	0h0200-0h023F	Area registered for User Group
	0h0240-0h027F	Area registered for Macro Group
	0h0280-0h02FF	Reserved

Total Memory Map for Communication		
Item	**Memory Map**	**Details**
Drive communication common area	0h0300-0h037F	Drive monitoring area
	0h0380-0h03DF	Drive control area
	0h03E0-0h03FF	Drive memory control area
	0h0400-0h0FFF	Reserved
	0h1100	dr Group
	0h1200	bA Group
	0h1300	Ad Group
	0h1400	Cn Group
	0h1500	In Group
	0h1600	OU Group
	0h1700	CM Group
	0h1800	AP Group
	0h1B00	Pr Group
	0h1C00	M2 Group

Parameter Group for Data Transmission

By defining a parameter group for data transmission, the communication addresses registered in the communication function group (CM) can be used in communication. Parameter group for data transmission may be defined to transmit multiple parameters at once, into the communication frame.

Parameter Group for Data Transmission							
Parameter Group	**Parameter Number**	**Name**	**LCD Display**	**Parameter Setting**		**Setting Range**	**Unit**
CM	31-38	Output communication address x	Para Status-x	-	-	0000-FFFF	Hex
	51-58	Input communication address x	Para Control-x	-	-	0000-FFFF	Hex

Currently Registered CM Group Parameter

Currently Registered CM Group Parameter		
Address	**Parameter**	**Assigned content by bit**
0h0100-0h0107	Status Parameter-1- Status Parameter-8	Parameter communication code value registered at CM.31-38 (Read-only)
0h0110-0h0117	Control Parameter-1- Control Parameter-8	Parameter communication code value registered at CM.51-58 (Read/Write access)

NOTE: When registering control parameters, register the operation speed (0h0380, 0h0381) and operation command (0h0006, 0h0382) parameters at the end of a parameter control frame. For example, when the parameter control frame has 5 parameter control items (Para Control - x), register the operation speed at Para Control-4 and the operation command to Para Control-5.

Communication Protocol

The built-in RS-485 communication supports Modbus-RTU protocol only.

Modbus-RTU Protocol

Function Code and Protocol (unit: byte)

In the following section, station ID is the value set at CM.01 (Int485 St ID), and starting address is the communication address. (starting address size is in bytes).

Function Code #03: Read Holding Register

Query Field Name
Station ID
Function(0x03)
Starting Address Hi
Starting Address Lo
Number of Points Hi
Number of Points Lo
CRC Lo
CRC Hi

Response Field Name	
Station ID	
Function(0x03)	
Byte Count	
Data Hi	Number of Points
Data Lo	
…	
…	
Data Hi	
Data Lo	
CRC Lo	
CRC Hi	

Function Code #04: Read Input Register

Query Field Name
Station ID
Function(0x04)
Starting Address Hi
Starting Address Lo
Number of Points Hi
Number of Points Lo
CRC Lo
CRC Hi

Response Field Name	
Station ID	
Function(0x04)	
Byte Count	
Data Hi	Number of Points
Data Lo	
…	
…	
Data Hi	
Data Lo	
CRC Lo	
CRC Hi	

Function Code #06: Preset Single Register

Query Field Name
Station ID
Function(0x06)
Starting Address Hi
Starting Address Lo
Preset Data Hi
Preset Data Lo
CRC Lo
CRC Hi

Response Field Name
Station ID
Function(0x06)
Register Address Hi
Register Address Lo
Preset Data Hi
Preset Data Lo
CRC Lo
CRC Hi

Function Code #16 (hex 0h10): Preset Multiple Register

Query Field Name
Station ID
Function(0x06)
Starting Address Hi
Starting Address Lo
Number of Register Hi
Number of Register Lo
Byte Count
Data Hi
Data Lo
...
...
Data Hi
Data Lo
CRC Lo
CRC Hi

Response Field Name
Station ID
Function(0x06)
Register Address Hi
Register Address Lo
Preset Data Hi
Preset Data Lo
CRC Lo
CRC Hi

Number of Points

Exception Code

Code
01: ILLEGAL FUNCTION
02: ILLEGAL DATA ADRESS
03: ILLEAL DATA VALUE
06: SLAVE DEVICE BUSY

Response

Field Name
Station ID
Function (The function value uses the top level bit for all query values.)
Exception Code
CRC Lo
CRC Hi

Example of Modbus-RTU Communication in Use

When the Acc time (Communication address 0x1103) is changed to 5.0 sec and the Dec time (Communication address 0x1104) is changed to 10.0 sec.

Frame Transmission from Master to Slave (Request)								
Item	**Station ID**	**Function**	**Staring Address**	**Number of Register**	**Byte Count**	**Data 1**	**Data 2**	**CRC**
Hex	0x01	0x10	0x1102	0x0002	0x04	0x0032	0x0064	0x1202
Description	CM.01 Int485 St ID	Preset Multiple Register	Starting Address -1 (0x1103-1)	-	-	50 (ACC time 5.0sec)	100 (DEC time 10.0sec)	-

Frame Transmission from Slave to Master (Response)					
Item	**Station ID**	**Function**	**Staring Address**	**Number of Register**	**CRC**
Hex	0x01	0x10	0x1102	0x0002	0xE534
Description	CM.01 Int485 St ID	Preset Multiple Register	Starting Address -1 (0x1103-1)	-	-

Drive Expansion Common Area Parameter

Monitoring Area Parameter (Read Only)

Monitoring Area Parameter (Read Only)						
Comm. Address			Parameter	Scale	Unit	Assigned Content by Bit
Hex	Modbus RTU	Modbus TCP				
0h0300	***40768***	***40769***	Drive model	-	-	ACN: 0006h
0h0301	***40769***	***40770***	Drive capacity	-	-	0.4 kW 1900h 1.1 kW 4011h 2.2 kW 4022h 3.7 kW 4037h 5.5 kW 4055h 11kW 40B0h 18.5 kW 4125h 0.75 kW 3200h 1.5 kW 4015h 3.0 kW 4030h 4.0 kW 4040h 7.5 kW 4075h 15kW 40F0h 22kW 4160h
0h0302	***40770***	***40771***	Drive input voltage/power (Single phase, 3-phase)/cooling method	-	-	230V 3-phase forced cooling: 0231h 460V single phase self cooling: 0420h 230V single phase self cooling: 0220h 460V 3-phase self cooling: 0430h 230V 3-phase self cooling: 0230h 460V single phase forced cooling: 0421h 230V single phase forced cooling: 0221h 460V 3-phase forced cooling: 0431h
0h0303	***40771***	***40772***	Drive S/W version	-	-	(Ex) 0h0100: Version 1.00 (Ex) 0h0101: Version 1.01
0h0304	***40772***	***40773***	Reserved	-	-	-

Monitoring Area Parameter (Read Only)							
Comm. Address			Parameter	Scale	Unit	Assigned Content by Bit	
Hex	Modbus RTU	Modbus TCP					
0h0305	***40773***	***40774***	Drive operation state	-	-	B12–B15	0 Normal state
							4 Warning occurred
							8 Fault occurred [operates according to Pr. 30 (Trip Out Mode) setting.]
						B8–B11	-
						B4–B7	1 Speed searching
							2 Accelerating
							3 Operating at constant rate
							4 Decelerating
							5 Decelerating to stop
							6 H/W OCS
							7 S/W OCS
							8 Dwell operating
						B0–B3	0 Stopped
							1 Operating in forward direction
							2 Operating in reverse direction
							3 DC operating (0 speed control)
0h0306	***40774***	***40775***	Drive operation frequency command source	-	-	B8–B15	Operation command source
							0 Keypad
							1 Communication option
							2 User Sequence
							3 Built-in RS 485
							4 Terminal block
						B0–B7	Frequency command source
							0 Keypad speed
							1 Keypad torque
							2–4 Up/Down operation speed
							5 V1
							7 V2
							8 I2
							9 Pulse
							10 Built-in RS 485
							11 Communication option
							12 User Sequence
							13 Jog
							14 PID
							25-39 Multi-step speed frequency
0h0307	***40775***	***40776***	LCD keypad S/W version	-	-	(Ex.) 0h0100: Version 1.00	
0h0308	***40776***	***40777***	LCD keypad title version	-	-	(Ex.) 0h0101: Version 1.01	
0h0309 - 0h030F	***40777 - 40783***	***40778 - 40784***	Reserved	-	-	-	

Monitoring Area Parameter (Read Only)							
Comm. Address			Parameter	Scale	Unit	Assigned Content by Bit	
Hex	Modbus RTU	Modbus TCP					
0h0310	***40784***	***40785***	Output current	0.1	A	-	
0h0311	***40785***	***40786***	Output frequency	0.01	Hz	-	
0h0312	***40786***	***40787***	Output rpm	0	rpm	-	
0h0313	***40787***	***40788***	Motor feedback speed	0	rpm	-32768 rpm-32767 rpm (directional)	
0h0314	***40788***	***40789***	Output voltage	1	V	-	
0h0315	***40789***	***40790***	DC Link voltage	1	V	-	
0h0316	***40790***	***40791***	Output power	0.1	%	-	
0h0317	***40791***	***40792***	Output torque	0.1	%	-	
0h0318	***40792***	***40793***	PID reference	0.1	%	-	
0h0319	***40793***	***40794***	PID feedback	0.1	%	-	
0h031A	***40794***	***40795***	Display the number of poles for the first motor	-	-	Displays the number of poles for the first motor	
0h031B	***40795***	***40796***	Display the number of poles for the second motor	-	-	Displays the number of poles for the second motor	
0h031C	***40796***	***40797***	Display the number of poles for the selected motor	-	-	Displays the number of poles for the selected motor	
0h031D	***40797***	***40798***	Select Hz/rpm	-	-	0	Hz
						1	RPM
0h031E - 0h031F	***40798 - 40799***	***40799 - 40800***	Reserved	-	-	-	
0h0320	***40800***	***40801***	Digital input information	-	-	B5–B15	Reserved
						B4	P5(I/O board)
						B3	P4(I/O board)
						B2	P3(I/O board)
						B1	P2(I/O board)
						B0	P1(I/O board)
0h0321	***40801***	***40802***	Digital output information	-	-	B2–BI5	Reserved
						B1	Q1
						B0	Relay 1
0h0322	***40802***	***40803***	Virtual digital input information	-	-	B8–B15	Reserved
						B7	Virtual DI 8(CM.77)
						B6	Virtual DI 7(CM.76)
						B5	Virtual DI 6(CM.75)
						B4	Virtual DI 5(CM.74)
						B3	Virtual DI 4(CM.73)
						B2	Virtual DI 3(CM.72)
						B1	Virtual DI 2(CM.71)
						B0	Virtual DI 1(CM.70)

Monitoring Area Parameter (Read Only)							
Comm. Address			Parameter	Scale	Unit	Assigned Content by Bit	
Hex	Modbus RTU	Modbus TCP					
0h0323	***40803***	***40804***	Display the selected motor	-	-	0	First Motor
						1	Second Motor
0h0324	***40804***	***40805***	AI1	0.01	%	Analog input V1 (I/O board)	
0h0325	***40805***	***40806***	Reserved	0.01	%		
0h0326	***40806***	***40807***	AI3	0.01	%	Analog input V2 (I/O board)	
0h0327	***40807***	***40808***	AI4	0.01	%	Analog input I2 (I/O board)	
0h0328	***40808***	***40809***	AO1	0.01	%	Analog output 1 (I/O board)	
0h0329	***40809***	***40810***	Reserved	0.01	%	Not used	
0h032A	***40810***	***40811***	AO3	0.01	%	Analog output 3 (extension IO board)	
0h032B	***40811***	***40812***	Reserved	0.01	%	Reserved	
0h032C	***40812***	***40813***	Reserved	-	-	-	
0h032D	***40813***	***40814***	Drive module temperature	1	°C	-	
0h032E	***40814***	***40815***	Drive power consumption	1	kWh	-	
0h032F	***40815***	***40816***	Drive power consumption		MWh	-	
0h0330	***40816***	***40817***	Latch type trip information - 1	-	-	BI5	Fuse Open Trip
						BI4	Over Heat Trip
						BI3	Arm Short
						BI2	External Trip
						BI1	Overvoltage Trip
						BI0	Overcurrent Trip
						B9	NTC Trip
						B8	Reserved
						B7	Reserved
						B6	Input open-phase trip
						B5	Output open-phase trip
						B4	Ground Fault Trip
						B3	E-Thermal Trip
						B2	Drive Overload Trip
						B1	Underload Trip
						B0	Overload Trip

Monitoring Area Parameter (Read Only)							
Comm. Address			Parameter	Scale	Unit	Assigned Content by Bit	
Hex	Modbus RTU	Modbus TCP					
0h0331	***40817***	***40818***	Latch type trip information - 2	-	-	BI5	Reserved
						BI4	Reserved
						BI3	Safety B
						BI2	Safety A
						BI1	Reserved
						BI0	Bad option card
						B9	No motor trip
						B8	External brake trip
						B7	Bad contact at basic I/O board
						B6	Pre PID Fail
						B5	Error while writing parameter
						B4	Reserved
						B3	FAN Trip
						B2	Reserved
						B1	Reserved
						B0	Reserved
0h0332	***40818***	***40819***	Level type trip information	-	-	B4–B15	Reserved
						B3	Keypad Lost Command
						B2	Lost Command
						B1	LV
						B0	BX
0h0333	***40819***	***40820***	H/W Diagnosis Trip information	-	-	B6–B15	Reserved
						B5	Queue Full
						B4	Reserved
						B3	Watchdog-2 error
						B2	Watchdog-1 error
						B1	EEPROM error
						B0	ADC error
0h0334	***40820***	***40821***	Warning information	-	-	B10–B15	Reserved
						B9	Auto Tuning failed
						B8	Keypad lost
						B7	Encoder disconnection
						B6	Wrong installation of encoder
						B5	DB
						B4	FAN running
						B3	Lost command
						B2	Drive Overload
						B1	Underload
						B0	Overload
0h0335 - 0h033F	***40821 - 40831***	***40822 - 40832***	Reserved	-	-	-	
0h0340	***40832***	***40833***	On Time date	0	Day	Total number of days the drive has been powered on	

Monitoring Area Parameter (Read Only)							
Comm. Address			Parameter	Scale	Unit	Assigned Content by Bit	
Hex	Modbus RTU	Modbus TCP					
0h0341	***40833***	***40834***	On Time minute	0	Min	Total number of minutes excluding the total number of On Time days	
0h0342	***40834***	***40835***	Run Time date	0	Day	Total number of days the drive has driven the motor	
0h0343	***40835***	***40836***	Run Time minute	0	Min	Total number of minutes excluding the total number of Run Time days	
0h0344	***40836***	***40837***	Fan Time date	0	Day	Total number of days the heat sink fan has been running	
0h0345	***40837***	***40838***	Fan Time minute	0	Min	Total number of minutes excluding the total number of Fan Time days	
0h0346 - 0h0348	***40838 - 40840***	***40839 - 40841***	Reserved	-	-	-	
0h0349	***40841***	***40842***	Reserved	-	-	-	
0h034A	***40842***	***40843***	Option 1	-	-	0	None
						9	Not Supported
0h034B	***40843***	***40844***	Reserved	-	-	-	
0h034C	***40844***	***40845***	Reserved	-	-	-	

Control Area Parameter (Read/ Write)

Control Area Parameter (Read/ Write)							
Comm. Address			Parameter	Scale	Unit	Assigned Content by Bit	
Hex	Modbus RTU	Modbus TCP					
0h0380	40896	40897	Frequency command	0.01	Hz	Command frequency setting	
0h0381	40897	40898	RPM command	1	rpm	Command rpm setting	
0h0382	40898	40899	Operation command	-	-	B7	Reserved
						B6	Reserved
						B5	Reserved
						B4	Reserved
						B3	0 → 1: Free-run stop
						B2	0 → 1: Trip initialization
						B1	0: Reverse command
							1: Forward command
						B0	0 Stop command
							1 Run command
						Example: Forward operation command 0003h, Reverse operation command 0001h.	
0h0383	40899	40900	Acceleration time	0.1	s	Acceleration time setting	
0h0384	40900	40901	Deceleration time	0.1	s	Deceleration time setting	
0h0385	40901	40902	Virtual digital input control (0: Off, 1:On)	-	-	B8–B15	Reserved
						B7	Virtual DI 8(CM.77)
						B6	Virtual DI 7(CM.76)
						B5	Virtual DI 6(CM.75)
						B4	Virtual DI 5(CM.74)
						B3	Virtual DI 4(CM.73)
						B2	Virtual DI 3(CM.72)
						B1	Virtual DI 2(CM.71)
						B0	Virtual DI 1(CM.70)
0h0386	40902	40903	Digital output control (0:Off, 1:On)	-	-	B5–BI5	Reserved
						B4	Relay 4 (Ext I/O, OUT-35: None)
						B3	Relay 3 (Ext I/O, OUT-34: None)
						B2	Not Supported
						B1	Q1 (0.4~22kW, OUT-33: None)
						B0	Relay 1 (0.4~22kW, OUT-31: None)
0h0387	40903	40904	Reserved	-	-	Reserved	
0h0388	40904	40905	PID reference	0.1	%	PID reference command	
0h0389	40905	40906	PID feedback value	0.1	%	PID feedback value	
0h038A	40906	40907	Motor rated current	0.1	A	-	
0h038B	40907	40908	Motor rated voltage	1	A	-	
0h038C-0h038F	40908 - 40911	40909 - 40912	Reserved	-	-	-	

Control Area Parameter (Read/ Write)						
Comm. Address			Parameter	Scale	Unit	Assigned Content by Bit
Hex	Modbus RTU	Modbus TCP				
0h0390	***40912***	***40913***	Torque Ref	0.1	%	Torque command
0h0391	***40913***	***40914***	Fwd Pos Torque Limit	0.1	%	Forward motoring torque limit
0h0392	***40914***	***40915***	Fwd Neg Torque Limit	0.1	%	Forward regenerative torque limit
0h0393	***40915***	***40916***	Rev Pos Torque Limit	0.1	%	Reverse motoring torque limit
0h0394	***40916***	***40917***	Rev Neg Torque Limit	0.1	%	Reverse regenerative torque limit
0h0395	***40917***	***40918***	Torque Bias	0.1	%	Torque bias
0h0396 - 0h0399	***40918 - 40921***	***40919 - 40922***	Reserved	-	-	-
0h039A	***40922***	***40923***	Anytime Para	-	-	Set the CNF.20 value (displayed on LCD keypad only)
0h039B	***40923***	***40924***	Monitor Line-1	-	-	Set the CNF.21 value (displayed on LCD keypad only)
0h039C	***40924***	***40925***	Monitor Line-2	-	-	Set the CNF.22 value (displayed on LCD keypad only)
0h039D	***40925***	***40926***	Monitor Line-3	-	-	Set the CNF.23 value (displayed on LCD keypad only)

A frequency set via communication using the common area frequency address (0h0380) is not saved even when used with the parameter save function. To save a changed frequency to use after a power cycle, follow these steps:

2) *Set dr.07 to Keypad-1 and select a random target frequency.*
3) *Set the frequency via communication into the parameter area frequency address (0h1101).*
4) *Perform the parameter save (0h03E0: '1') before turning off the power. After the power cycle, the frequency set before turning off the power is displayed.*

Drive Memory Control Area Parameter (Read and Write)

- *♦R/W – Parameter Write–enabled during Operation (Run mode)*
- *R/W – Parameter Write–enabled when stopped*
- *Parameter Read Only*

Drive Memory Control Area Parameter (Read and Write)								
Comm. Address			Parameter	Scale	Unit	Changeable During Operation	Function	
Hex	Modbus RTU	Modbus TCP						
0h03E0	***40992***	***40993***	Save parameters	-	-	R/W	0	No
							1	Yes
0h03E1	***40993***	***40994***	Monitor mode initialization	-	-	♦R/W	0	No
							1	Yes

Drive Memory Control Area Parameter (Read and Write)								
Comm. Address			Parameter	Scale	Unit	Changeable During Operation	Function	
Hex	Modbus RTU	Modbus TCP						
0h03E2	***40994***	***40995***	Parameter initialization	-	-	R/W	0	No
							1	All Grp
							2	Drv Grp
							3	bA Grp
							4	Ad Grp
							5	Cn Grp
							6	In Grp
							7	OU Grp
							8	CM Grp
							9	AP Grp
							12	Pr Grp
							13	M2 Grp
							Setting is prohibited during fault trip interruptions.	
0h03E3	***40995***	***40996***	Display changed parameters	-	-	♦R/W	0	No
							1	Yes
0h03E4	***40996***	***40997***	Reserved	-	-	Read Only	-	
0h03E5	***40997***	***40998***	Delete all fault history	-	-	♦R/W	0	No
							1	Yes
0h03E6	***40998***	***40999***	Delete user-registrated codes	-	-	♦R/W	0	No
							1	Yes
0h03E7	***40999***	***41000***	Hide parameter mode	0	Hex	♦R/W	Write: 0-9999	
							Read	
							0	Unlock
							1	Lock
0h03E8	***41000***	***41001***	Lock parameter mode	0	Hex	♦R/W	Write: 0-9999	
							Read	
							0	Unlock
							1	Lock
0h03E9	***41001***	***41002***	Easy start on (easy parameter setup mode)	-	-	♦R/W	0	No
							1	Yes
0h03EA	***41002***	***41003***	Initializing power consumption	-	-	♦R/W	0	No
							1	Yes
0h03EB	***41003***	***41004***	Initialize drive operation accumulative time	-	-	♦R/W	0	No
							1	Yes
0h03EC	***41004***	***41005***	Initialize cooling fan accumulated operation time	-	-	♦R/W	0	No
							1	Yes

When setting parameters in the drive memory control area, the values are reflected to the drive operation and saved. Parameters set in other areas via communication are reflected to the drive operation, but are not saved. All set values are cleared following a drive power cycle and revert back to its previous values. When setting

parameters via communication, ensure that a parameter save is completed prior to shutting the drive down.

Whereas the drive may respond and operate to new parameters written via communications, some parameters set via communications are not retentive upon a power cycle UNLESS the new parameter values have been SAVED prior to the power cycle.

- *Parameter SET via Communications + NOT Saved + Power Cycle = Parameters reverts back to previous setting.*
- *Parameter SET via Communications + SAVED + Power Cycle = Parameters holds saved value.*

The addresses 0h03E7 and 0h03E8 are parameters for entering the password. When the password is entered, the condition will change from Lock to Unlock, and vice versa. When the same parameter value is entered continuously, the parameter is executed just once. Therefore, if the same value is entered again, change it to another value first and then re-enter the previous value. For example, if you want to enter 244 twice, enter it in the following order: 244 → 0 → 244.

NOTE: It may take longer to set the parameter values in the drive memory control area because all data is saved to the drive. Be careful as communication may be lost during parameter setup if parameter setup is continues for an extended period of time.

Drive Parameter Modbus Communication Addresses

The following tables list the specific modbus addresses for all parameters in the ACN series drive. Please note, the Modbus RTU addresses for serial use are different than the Modbus TCP addresses for use with the ACN-ETH communications option card. Hex Address 0000 is unavailable with Modbus RTU.

Parameter	HEX	ModbusRTU Decimal	ModbusTCP Decimal	Parameter	HEX	ModbusRTU Decimal	ModbusTCP Decimal
Drive Group							
dR.01	1101	44353	44354	***dR.20***	1114	44372	44373
dR.02	1102	44354	44355	***dR.21***	1115	44373	44374
dR.03	1103	44355	44356	***dR.22***	1116	44374	44375
dR.04	1104	44356	44357	***dR.23***	1117	44375	44376
dR.06	1106	44358	44359	***dR.24***	1118	44376	44377
dR.07	1107	44359	44360	***dR.25***	1119	44377	44378
dR.08	1108	44360	44361	***dR.80***	1150	44432	44433
dR.09	1109	44361	44362	***dR.81***	1151	44433	44434
dR.10	1110A	44362	44363	***dR.89***	1159	40995	40996
dR.11	110B	44363	44364	***dR.90***	1115A	44442	44443
dR.12	110C	44364	44365	***dR.91***	1115B	44443	44444
dR.13	110D	44365	44366	***dr.93***	1115D	44445	44446
dR.14	110E	44366	44367	***dr.94***	1115E	44446	44447
dR.15	110F	44367	44368	***dr.95***	1115F	44447	44448
dR.16	1110	44368	44369	***dr.97***	1161	44449	44450
dR.17	1111	44369	44370	***dr.98***	1162	44450	44451
dR.18	1112	44370	44371	***dr.99***	1163	44451	44452
dR.19	1113	44371	44372				

Parameter	HEX	ModbusRTU Decimal	ModbusTCP Decimal	Parameter	HEX	ModbusRTU Decimal	ModbusTCP Decimal
Basic Group							
bA.1	1201	44609	44610	***bA.35***	-	-	-
bA.2	1202	44610	44611	***bA.41***	1229	44649	44650
bA.3	1203	44611	44612	***bA.42***	122A	44650	44651
bA.4	1204	44612	44613	***bA.43***	122B	44651	44652
bA.5	1205	44613	44614	***bA.44***	122C	44652	44653
bA.6	1206	44614	44615	***bA.45***	122D	44653	44654
bA.7	1207	44615	44616	***bA.46***	122E	44654	44655
bA.8	1208	44616	44617	***bA.47***	122F	44655	44656
bA.9	1209	44617	44618	***bA.48***	1230	44656	44657
bA.10	120A	44618	44619	***-***	-	40000	40001
bA.11	120B	44619	44620	***bA.50***	1232	44658	44659
bA.12	120C	44620	44621	***bA.51***	1233	44659	44660
bA.13	120D	44621	44622	***bA.52***	1234	44660	44661
bA.14	120E	44622	44623	***bA.53***	1235	44661	44662
bA.15	120F	44623	44624	***bA.54***	1236	44662	44663
bA.16	1210	44624	44625	***bA.55***	1237	44663	44664
bA.17	1211	44625	44626	***bA.56***	1238	44664	44665
bA.18	1212	44626	44627	***bA.70***	1246	44678	44679
bA.19	1213	44627	44628	***bA.71***	1247	44679	44680
bA.20	-	-	-	***bA.72***	1248	44680	44681
bA.21	-	-	-	***bA.73***	1249	44681	44682
bA.22	-	-	-	***bA.74***	124A	44682	44683
bA.23	-	-	-	***bA.75***	124B	44683	44684
bA.24	-	-	-	***bA.76***	124C	44684	44685
bA.25	-	-	-	***bA.77***	124D	44685	44686
bA.26	-	-	-	***bA.78***	124E	44686	44687
bA.28	-	-	-	***bA.79***	124F	44687	44688
bA.29	-	-	-	***bA.80***	1250	44688	44689
bA.30	-	-	-	***bA.81***	1251	44689	44690
bA.31	-	-	-	***bA.82***	1252	44690	44691
bA.32	-	-	-	***bA.83***	1253	44691	44692
bA.34	-	-	-				

Parameter	HEX	ModbusRTU Decimal	ModbusTCP Decimal	Parameter	HEX	ModbusRTU Decimal	ModbusTCP Decimal
Advanced Group							
Ad.1	1301	44865	44866	***Ad.44***	132C	44908	44909
Ad.2	1302	44866	44867	***Ad.45***	132D	44909	44910
Ad.3	1303	44867	44868	***Ad.46***	132E	44910	44911
Ad.4	1304	44868	44869	***Ad.47***	132F	44911	44912
Ad.5	1305	44869	44870	***Ad.50***	1332	44914	44915
Ad.6	1306	44870	44871	***Ad.51***	1333	44915	44916
Ad.7	1307	44871	44872	***Ad.60***	133C	44924	44925
Ad.8	1308	44872	44873	***Ad.61***	133D	44925	44926
Ad.9	1309	44873	44874	***Ad.62***	133E	44926	44927
Ad.10	130A	44874	44875	***Ad.63***	133F	44927	44928
Ad.12	130C	44876	44877	***Ad.64***	1340	44928	44929
Ad.13	130D	44877	44878	***Ad.65***	1341	44929	44930
Ad.14	130E	44878	44879	***Ad.66***	1342	44930	44931
Ad.15	130F	44879	44880	***Ad.67***	1343	44931	44932
Ad.16	1310	44880	44881	***Ad.68***	1344	44932	44933
Ad.17	1311	44881	44882	***Ad.70***	1346	44934	44935
Ad.20	1314	44884	44885	***Ad.71***	1347	44935	44936
Ad.21	1315	44885	44886	***Ad.72***	1348	44936	44937
Ad.22	1316	44886	44887	***Ad.74***	134A	44938	44939
Ad.23	1317	44887	44888	***Ad.75***	134B	44939	44940
Ad.24	1318	44888	44889	***Ad.76***	134C	44940	44941
Ad.25	1319	44889	44890	***Ad.77***	134D	44941	44942
Ad.26	131A	44890	44891	***Ad.78***	134E	44942	44943
Ad.27	131B	44891	44892	***Ad.79***	134F	44943	44944
Ad.28	131C	44892	44893	***Ad.80***	1350	44944	44945
Ad.29	131D	44893	44894	***Ad.81***	1351	44945	44946
Ad.30	131E	44894	44895	***Ad.82***	1352	44946	44947
Ad.31	131F	44895	44896	***Ad.83***	-	-	-
Ad.32	1320	44896	44897	***Ad.85***	1355	44949	44950
Ad.33	1321	44897	44898	***Ad.86***	1356	44950	44951
Ad.41	1329	44905	44906	***Ad.87***	1357	44951	44952
Ad.42	132A	44906	44907				

Parameter	HEX	ModbusRTU Decimal	ModbusTCP Decimal	Parameter	HEX	ModbusRTU Decimal	ModbusTCP Decimal
Control Group							
Cn.4	1404	45124	45125	***Cn.50***	1432	45170	45171
Cn.5	1405	45125	45126	***Cn.51***	1433	45171	45172
Cn.9	1409	45129	45130	***Cn.52***	1434	45172	45173
Cn.10	140A	45130	45131	***Cn.53***	1435	45173	45174
Cn.11	140B	45131	45132	***Cn.54***	1436	45174	45175
Cn.12	140C	45133	45134	***Cn.55***	1437	45175	45176
Cn.13	140D	45135	45136	***Cn.56***	1438	45176	45177
Cn.15	140F	45136	45137	***Cn.57***	1439	45177	45178
Cn.16	1410	45137	45138	***Cn.62***	143E	45182	45183
Cn.20	1414	45140	45141	***Cn.63***	143F	45183	45184
Cn.21	1415	45141	45142	***Cn.64***	1440	45184	45185
Cn.22	1416	45142	45143	***Cn.65***	1441	45185	45186
Cn.23	1417	45143	45144	***Cn.69***	-	-	-
Cn.24	1418	45144	45145	***Cn.70***	1446	45190	45191
Cn.25	1419	45145	45146	***Cn.71***	1447	45191	45192
Cn.26	141A	45146	45147	***Cn.72***	1448	45192	45193
Cn.27	141B	45147	45148	***Cn.73***	1449	45193	45194
Cn.28	141C	45148	45149	***Cn.74***	144A	45194	45195
Cn.29	141D	45149	45150	***Cn.75***	144B	45195	45196
Cn.30	141E	45150	45151	***Cn.76***	144C	45196	45197
Cn.31	141F	45151	45152	***Cn.77***	144D	45197	45198
Cn.32	1420	45152	45153	***Cn.78***	144E	45198	45199
Cn.33	1421	45153	45154	***Cn.79***	144F	45199	45200
Cn.34	1422	45154	45155	***Cn.80***	1450	45200	45201
Cn.35	1423	45155	45156	***Cn.81***	1451	45201	45202
Cn.36	1424	45156	45157	***Cn.82***	1452	45202	45203
Cn.37	1425	45157	45158	***Cn.83***	1453	45203	45204
Cn.38	1426	45158	45159	***Cn.85***	1455	45205	45206
Cn.39	1427	45159	45160	***Cn.86***	1456	45206	45207
Cn.40	1428	45160	45161	***Cn.87***	1457	45207	45208
Cn.41	1429	45161	45162	***Cn.88***	1458	45208	45209
Cn.42	142A	45162	45163	***Cn.89***	1459	45209	45210
Cn.43	142B	45163	45164	***Cn.90***	145A	45210	45211
Cn.44	142C	45164	45165	***Cn.91***	145B	45211	45212
Cn.45	142D	45165	45166	***Cn.92***	145C	45212	45213
Cn.46	142E	45166	45167	***Cn.93***	145D	45213	45214
Cn.48	1430	45168	45169	***Cn.94***	145E	45214	45215
Cn.49	1431	45169	45170	***Cn.95***	145F	45215	45216

Parameter	HEX	ModbusRTU Decimal	ModbusTCP Decimal	Parameter	HEX	ModbusRTU Decimal	ModbusTCP Decimal
Input Group							
In.1	1501	45377	45378	***In.54***	1536	45430	45431
In.2	1502	45378	45379	***In.55***	1537	45431	45432
In.5	1505	45381	45382	***In.56***	1538	45432	45433
In.6	1506	45382	45383	***In.61***	153D	45437	45438
In.7	1507	45383	45384	***In.62***	153E	45438	45439
In.8	1508	45384	45385	***In.65***	1541	45441	45442
In.9	1509	45385	45386	***In.66***	1542	45442	45443
In.10	150A	45386	45387	***In.67***	1543	45443	45444
In.11	150B	45387	45388	***In.68***	1544	45444	45445
In.12	150C	45388	45389	***In.69***	1545	45445	45446
In.13	150D	45389	45390	***In.84***	1554	5460	45461
In.14	150E	45390	45391	***In.85***	1555	5461	45462
In.15	150F	45391	45392	***In.86***	1556	5462	45463
In.16	1510	45392	45393	***In.87***	1557	5463	45464
In.17	1511	45393	45394	***In.89***	1559	5465	45466
In.35	1523	45411	45412	***In.90***	155A	5466	45467
In.37	1525	45413	45414	***In.91***	155B	5467	45468
In.38	1526	45414	45415	***In.92***	155C	5468	45469
In.39	1527	45415	45416	***In.93***	155D	5469	45470
In.40	1528	45416	45417	***In.94***	155E	5470	45471
In.41	1529	45417	45418	***In.95***	155F	5471	45472
In.46	152E	45422	45423	***In.96***	1560	5472	45473
In.47	152F	45423	45424	***In.97***	1561	5473	45474
In.50	1532	45426	45427	***In.98***	1562	5474	45475
In.52	1534	45428	45429	***In.99***	1563	5475	45476
In.53	1535	45429	45430				
Output Group							
OU.1	1601	45633	45634	***OU.52***	1634	45684	45685
OU.2	1602	45634	45635	***OU.53***	1635	45685	45686
OU.3	1603	45635	45636	***OU.54***	1636	45686	45687
OU.4	1604	45636	45637	***OU.55***	1637	45687	45688
OU.5	1605	45637	45638	***OU.56***	1638	45688	45689
OU.6	1606	45638	45639	***OU.57***	1639	45689	45690
OU.30	161E	45662	45663	***OU.58***	163A	45690	45691
OU.31	161F	45663	45664	***OU.61***	163D	45693	45694
OU.32	1620	45664	45665	***OU.62***	163E	45694	45695
OU.33	1621	45665	45666	***OU.63***	163F	45695	45696
OU.41	1629	45673	45674	***OU.64***	1640	45696	45697
OU.50	1632	45682	45683	***OU.65***	1641	45697	45698
OU.51	1633	45683	45684	***OU.66***	1642	45698	45699

Parameter	HEX	ModbusRTU Decimal	ModbusTCP Decimal	Parameter	HEX	ModbusRTU Decimal	ModbusTCP Decimal
Communication Group							
CM.1	1701	45889	45890	***CM.35***	1723	45923	45924
CM.2	1702	45890	45891	***CM.36***	1724	45924	45925
CM.3	1703	45891	45892	***CM.37***	1725	45925	45926
CM.4	1704	45892	45893	***CM.38***	1726	45926	45927
CM.5	1705	45893	45894	***CM.49***	1731	45937	45938
CM.6	1706	45894	45895	***CM.50***	1732	45938	45939
CM.7	1707	45895	45896	***CM.51***	1733	45939	45940
CM.8	1708	45896	45897	***CM.52***	1734	45940	45941
CM.9	1709	45897	45898	***CM.53***	1735	45941	45942
CM.10	170A	45898	45899	***CM.54***	1736	45942	45943
CM.11	170B	45899	45900	***CM.55***	1737	45943	45944
CM.12	170C	45900	45901	***CM.56***	1738	45944	45945
CM.13	170D	45901	45902	***CM.57***	1739	45945	45946
CM.14	170E	45902	45903	***CM.58***	173A	45946	45947
CM.15	170F	45903	45904	***CM.68***	1744	45956	45957
CM.16	1710	45904	45905	***CM.70***	1746	45958	45959
CM.17	1711	45905	45906	***CM.71***	1747	45959	45960
CM.18	1712	45906	45907	***CM.72***	1748	45960	45961
CM.19	1713	45907	45908	***CM.73***	1749	45961	45962
CM.20	1714	45908	45909	***CM.74***	174A	45962	45963
CM.21	1715	45909	45910	***CM.75***	174B	45963	45964
CM.22	1716	45910	45911	***CM.76***	174C	45964	45965
CM.23	1717	45911	45912	***CM.77***	174D	45965	45966
CM.24	1718	45912	45913	***CM.86***	1756	45974	45975
CM.25	1719	45913	45914	***CM.90***	175A	45978	45979
CM.29	171D	45917	45918	***CM.91***	175B	45979	45980
CM.30	171E	45918	45919	***CM.92***	175C	45980	45981
CM.31	171F	45919	45920	***CM.93***	175D	45981	45982
CM.32	1720	45920	45921	***CM.94***	-	-	-
CM.33	1721	45921	45922	***CM.95***	1760	45984	45985
CM.34	1722	45922	45923	***CM.96***	-	-	-

Parameter	HEX	ModbusRTU Decimal	ModbusTCP Decimal	Parameter	HEX	ModbusRTU Decimal	ModbusTCP Decimal
Application Group							
AP.1	1801	46145	46146	***AP.29***	181D	46173	46174
AP.2	-	46146	46147	***AP.30***	181E	46174	46175
AP.16	1810	46160	46161	***AP.31***	181F	46175	46176
AP.17	1811	46161	46162	***AP.32***	1820	46176	46177
AP.18	1812	46162	46163	***AP.34***	1822	46178	46179
AP.19	1813	46163	46164	***AP.35***	1823	46179	46180
AP.20	1814	46164	46165	***AP.36***	1824	46180	46181
AP.21	1815	46165	46166	***AP.37***	1825	46181	46182
AP.22	1816	46166	46167	***AP.38***	1826	46182	46183
AP.23	1817	46167	46168	***AP.39***	1827	46183	46184
AP.24	1818	46168	46169	***AP.40***	1828	46184	46185
AP.25	1819	46169	46170	***AP.42***	182A	46186	46187
AP.26	181A	46170	46171	***AP.43***	182B	46187	46188
AP.27	181B	46171	46172	***AP.44***	182C	46188	46189
AP.28	181C	46172	46173	***AP.45***	182D	46189	46190
Extension IO Group							
AO.1	1A01	46657	46658	***AO.20***	1A14	46676	46677
AO.2	1A02	46658	46659	***AO.21***	1A15	46677	46678
AO.3	1A03	46659	46660	***AO.22***	1A16	46678	46679
AO.4	1A04	46660	46661	***AO.23***	1A17	46679	46680
AO.5	1A05	46661	46662	***AO.24***	1A18	46680	46681
AO.6	1A06	46662	46663	***AO.25***	1A19	46681	46682
AO.7	1A07	46663	46664	***AO.26***	1A1A	46682	46683
AO.8	1A08	46664	46665	***AO.27***	1A1B	46683	46684
AO.9	1A09	46665	46666	***AO.28***	1A1C	46684	46685
AO.10	1A0A	46666	46667	***AO.29***	1A1D	46685	46686
AO.11	1A0B	46667	46668	***AO.30***	1A1E	46686	46687
AO.12	1A0C	46668	46669	***AO.31***	1A1F	46687	46688
AO.13	1A0D	46669	46670	***AO.32***	1A20	46688	46689
AO.14	1A0E	46670	46671	***AO.33***	1A21	46689	46690
AO.15	1A0F	46671	46672	***AO.34***	1A22	46690	46691
AO.16	1A10	46672	46673	***AO.35***	1A23	46691	46692
AO.17	1A11	46673	46674	***AO.36***	1A24	46692	46693
AO.18	1A12	46674	46675	***AO.37***	1A25	46693	46694
AO.19	1A13	46675	46676				

Parameter	HEX	ModbusRTU Decimal	ModbusTCP Decimal	Parameter	HEX	ModbusRTU Decimal	ModbusTCP Decimal
Protection Group							
Pr.4	1B04	46916	46917	***Pr.51***	1B33	46963	46964
Pr.5	1B05	46917	46918	***Pr.52***	1B34	46964	46965
Pr.6	1B06	46918	46919	***Pr.53***	1B35	46965	46966
Pr.7	1B07	46919	46920	***Pr.54***	1B36	46966	46967
Pr.8	1B08	46920	46921	***Pr.55***	1B37	46967	46968
Pr.9	1B09	46921	46922	***Pr.56***	1B38	46968	46969
Pr.10	1B0A	46922	46923	***Pr.57***	1B39	46969	46970
Pr.12	1B0C	46924	46925	***Pr.58***	1B3A	46970	46971
Pr.13	1B0D	46925	46926	***Pr.59***	1B3B	46971	46972
Pr.14	1B0E	46926	46927	***Pr.60***	1B3C	46972	46973
Pr.15	1B0F	46927	46928	***Pr.61***	1B3D	46973	46974
Pr.17	1B11	46929	46930	***Pr.62***	1B3E	46974	46975
Pr.18	1B12	46930	46931	***Pr.63***	1B3F	46975	46976
Pr.19	1B13	46931	46932	***Pr.66***	1B42	46978	46979
Pr.20	1B14	46932	46933	***Pr.73***	1B49	46946	46947
Pr.21	1B15	46933	46934	***Pr.74***	1B4A	46947	46948
Pr.22	1B16	46934	46935	***Pr.75***	1B4B	46948	46949
Pr.25	1B19	46937	46938	***Pr.79***	1B4F	46991	46992
Pr.26	1B1A	46938	46939	***Pr.80***	1B50	46992	46993
Pr.27	1B1B	46939	46940	***Pr.81***	1B51	46993	46994
Pr.28	1B1C	46940	46941	***Pr.82***	1B52	46994	46995
Pr.29	1B1D	46941	46942	***Pr.86***	1B56	46998	46999
Pr.30	1B1E	46942	46943	***Pr.87***	1B57	46999	47000
Pr.31	1B1F	46943	46944	***Pr.88***	1B58	47000	47001
Pr.32	1B20	46944	46945	***Pr.89***	1B59	47001	47002
Pr.33	1B21	46945	46946	***Pr.91***	1B5B	47003	47004
Pr.40	1B28	46952	46953	***Pr.92***	1B5C	47004	47005
Pr.41	1B29	46953	46954	***Pr.93***	1B5D	47005	47006
Pr.42	1B2A	46954	46955	***Pr.94***	1B5E	47006	47007
Pr.43	1B2B	46955	46956	***Pr.95***	1B5F	47007	47008
Pr.45	1B2D	46957	46958	***Pr.96***	1B60	47008	47009
Pr.50	1B32	46962	46963				

Parameter	HEX	ModbusRTU Decimal	ModbusTCP Decimal	Parameter	HEX	ModbusRTU Decimal	ModbusTCP Decimal
2nd Motor Group							
m2.4	1C04	47172	47173	***m2.18***	-	-	-
m2.5	1C05	47173	47174	***m2.19***	-	-	-
m2.6	1C06	47174	47175	***m2.20***	-	-	-
m2.7	1C07	47175	47176	***m2.25***	1C19	47193	47194
m2.8	1C08	47176	47177	***m2.26***	1C1A	47194	47195
m2.10	1C0A	47178	47179	***m2.27***	1C1B	47195	47196
m2.11	1C0B	47179	47180	***m2.28***	1C1C	47196	47197
m2.12	1C0C	47180	47181	***m2.29***	1C1D	47197	47198
m2.13	1C0D	47181	47182	***m2.30***	1C1E	47198	47199
m2.14	1C0E	47182	47183	***m2.40***	1C28	47208	47209
m2.15	1C0F	47183	47184	***m2.41***	1C29	47209	47210
m2.16	1C10	47184	47185	***m2.42***	1C2A	47210	47211
m2.17	-	-	-				
User Sequence Group							
US.1	1D01	47425	47426	***US.39***	1D27	47463	47464
US.2	1D02	47426	47427	***US.40***	1D28	47464	47465
US.11	1D0B	47435	47436	***US.41***	1D29	47465	47466
US.12	1D0C	47436	47437	***US.42***	1D2A	47466	47467
US.13	1D0D	47437	47438	***US.43***	1D2B	47467	47468
US.14	1D0E	47438	47439	***US.44***	1D2C	47468	47469
US.15	1D0F	47439	47440	***US.45***	1D2D	47469	47470
US.16	1D10	47440	47441	***US.46***	1D2E	47470	47471
US.17	1D11	47441	47442	***US.47***	1D2F	47471	47472
US.18	1D12	47442	47443	***US.48***	1D30	47472	47473
US.19	1D13	47443	47444	***US.49***	1D31	47473	47474
US.20	1D14	47444	47445	***US.50***	1D32	47474	47475
US.21	1D15	47445	47446	***US.51***	1D33	47475	47476
US.22	1D16	47446	47447	***US.52***	1D34	47476	47477
US.23	1D17	47447	47448	***US.53***	1D35	47477	47478
US.24	1D18	47448	47449	***US.54***	1D36	47478	47479
US.25	1D19	47449	47450	***US.55***	1D37	47479	47480
US.26	1D1A	47450	47451	***US.56***	1D38	47480	47481
US.27	1D1B	47451	47452	***US.57***	1D39	47481	47482
US.28	1D1C	47452	47453	***US.58***	1D3A	47482	47483
US.31	1D1F	47455	47456	***US.59***	1D3B	47483	47484
US.32	1D20	47456	47457	***US.60***	1D3C	47484	47485
US.33	1D21	47457	47458	***US.80***	1D50	47504	47505
US.34	1D22	47458	47459	***US.81***	1D51	47505	47506
US.35	1D23	47459	47460	***US.82***	1D52	47506	47507
US.36	1D24	47460	47461	***US.85***	1D55	47509	47510
US.37	1D25	47461	47462	***US.88***	1D58	47512	47513
US.38	1D26	47462	47463				

Parameter	HEX	ModbusRTU Decimal	ModbusTCP Decimal	Parameter	HEX	ModbusRTU Decimal	ModbusTCP Decimal
User Sequence Function Group							
UF.1	1E01	47681	47682	***UF.46***	1E2E	47726	47727
UF.2	1E02	47682	47683	***UF.47***	1E2F	47727	47728
UF.3	1E03	47683	47684	***UF.48***	1E30	47728	47729
UF.4	1E04	47684	47685	***UF.49***	1E31	47729	47730
UF.5	1E05	47685	47686	***UF.50***	1E32	47730	47731
UF.6	1E06	47686	47687	***UF.51***	1E33	47731	47732
UF.7	1E07	47687	47688	***UF.52***	1E34	47732	47733
UF.8	1E08	47688	47689	***UF.53***	1E35	47733	47734
UF.9	1E09	47689	47690	***UF.54***	1E36	47734	47735
UF.10	1E0A	47690	47691	***UF.55***	1E37	47735	47736
UF.11	1E0B	47691	47692	***UF.56***	1E38	47736	47737
UF.12	1E0C	47692	47693	***UF.57***	1E39	47737	47738
UF.13	1E0D	47693	47694	***UF.58***	1E3A	47738	47739
UF.14	1E0E	47694	47695	***UF.59***	1E3B	47739	47740
UF.15	1E0F	47695	47696	***UF.60***	1E3C	47740	47741
UF.16	1E10	47696	47697	***UF.61***	1E3D	47741	47742
UF.17	1E11	47697	47698	***UF.62***	1E3E	47742	47743
UF.18	1E12	47698	47699	***UF.63***	1E3F	47743	47744
UF.19	1E13	47699	47700	***UF.64***	1E40	47744	47745
UF.20	1E14	47700	47701	***UF.65***	1E41	47745	47746
UF.21	1E15	47701	47702	***UF.66***	1E42	47746	47747
UF.22	1E16	47702	47703	***UF.67***	1E43	47747	47748
UF.23	1E17	47703	47704	***UF.68***	1E44	47748	47749
UF.24	1E18	47704	47705	***UF.69***	1E45	47749	47750
UF.25	1E19	47705	47706	***UF.70***	1E46	47750	47751
UF.26	1E1A	47706	47707	***UF.71***	1E47	47751	47752
UF.27	1E1B	47707	47708	***UF.72***	1E48	47752	47753
UF.28	1E1C	47708	47709	***UF.73***	1E49	47753	47754
UF.29	1E1D	47709	47710	***UF.74***	1E4A	47754	47755
UF.30	1E1E	47710	47711	***UF.75***	1E4B	47755	47756
UF.31	1E1F	47711	47712	***UF.76***	1E4C	47756	47757
UF.32	1E20	47712	47713	***UF.77***	1E4D	47757	47758
UF.33	1E21	47713	47714	***UF.78***	1E4E	47758	47759
UF.34	1E22	47714	47715	***UF.79***	1E4F	47759	47760
UF.35	1E23	47715	47716	***UF.80***	1E50	47760	47761
UF.36	1E24	47716	47717	***UF.81***	1E51	47761	47762
UF.37	1E25	47717	47718	***UF.82***	1E52	47762	47763
UF.38	1E26	47718	47719	***UF.83***	1E53	47763	47764
UF.39	1E27	47719	47720	***UF.84***	1E54	47764	47765
UF.40	1E28	47720	47721	***UF.85***	1E55	47765	47766
UF.41	1E29	47721	47722	***UF.86***	1E56	47766	47767
UF.42	1E2A	47722	47723	***UF.87***	1E57	47767	47768
UF.43	1E2B	47723	47724	***UF.88***	1E58	47768	47769

Parameter	HEX	ModbusRTU Decimal	ModbusTCP Decimal	Parameter	HEX	ModbusRTU Decimal	ModbusTCP Decimal
UF.44	1E2C	47724	47725	***UF.89***	1E59	47769	47770
UF.45	1E2D	47725	47726	***UF.90***	1E5A	47770	47771
Operation Group							
0.00	1F00	47936	47937	***St3***	1F07	47943	47944
ACC	1F01	47937	47938	***Cur***	1F08	47944	47945
dEC	1F02	47938	47939	***RPM***	1F09	47945	47946
drv	1F03	47939	47940	***dCL***	1F0A	47946	47947
Fr9	1F04	47940	47941	***vOL***	1F0B	47947	47948
St1	1F05	47941	47942	***nOn***	1F0C	47948	47949
St2	1F06	47942	47943	***drC***	1F0D	47949	47950