Chapter 3: Keypad Operation and Quick Start

Chapter

3

Table of Contents

Chapter 3: Keypad Operation and Quick Start

Learning to Perform Basic Operations 3–2

About the Keypad 3–2

Learning to Use the Keypad 3–5

Actual Application Examples 3–10

Wiring Diagram 3–13

Operation Pattern 3–13

Monitoring the Operation 3–17

Learning to Perform Basic Operations

This chapter describes the keypad layout and functions. It also introduces parameter groups and the parameters, required to perform basic operations. The chapter also outlines the basic operation of the drive before advancing to more complex applications. Examples are provided to demonstrate how the drive actually operates.

About the Keypad

The keypad is composed of two main components – the display and the operation (input) keys. Refer to the following illustration to identify part names and functions.

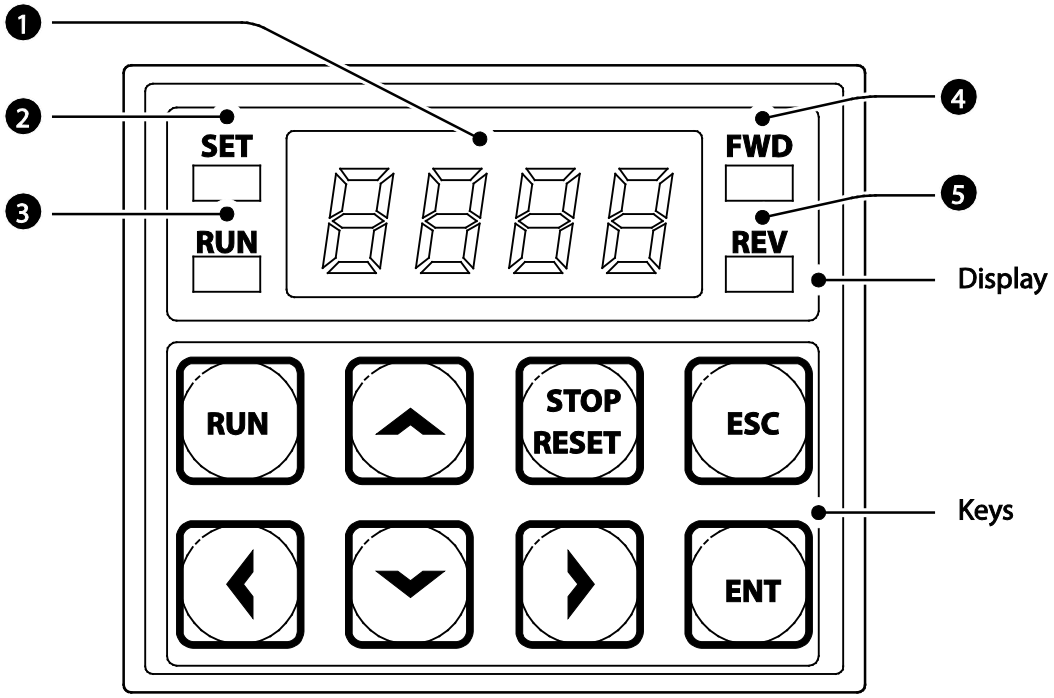

About the Display

The following table lists display part names and their functions.

No.	Name	Function
1	7-Segment Display	Displays current operational status and parameter information.
2	SET Indicator	LED flashes during parameter configuration and when the ESC key operates as the multi-function key.
3	RUN Indicator	LED turns on (steady) during an operation, and flashes during acceleration or deceleration.
4	FWD Indicator	LED turns on (steady) during forward operation.
5	REV Indicator	LED turns on (steady) during reverse operation.

The table below lists the way that the keypad displays characters (letters and numbers).

0	0	A	A	K	K	U	U
1	1	b	B	L	L	V	V
2	2	C	C	M	M	W	W
3	3	d	D	n	N	X	X
4	4	E	E	O	O	Y	Y
5	5	F	F	P	P	Z	Z
6	6	G	G	q	Q	-	-
7	7	H	H	r	R	-	-
8	8	I	I	S	S	-	-
9	9	J	J	t	T	-	-

Operation Keys

The following table lists the names and functions of the keypad's operation keys.

Key	Name	Description
RUN	[RUN] key	Used to run the drive (inputs a RUN command).
STOP RESET	[STOP/RESET] key	STOP: stops the drive. RESET: resets the drive following fault or failure condition.
▲, ▼	Up Arrow key,Down Arrow key	Switch between codes, or to increase or decrease parameter values.
◄, ►	[◄] key, [►] key	Switch between groups, or to move the cursor during parameter setup or modification.
ENT	[ENT] key	Used to select, confirm, or save a parameter value.
ESC	[ESC] key	A configurable multi-function key used to configure different functions, such as: Jog operation, Remote/Local mode switching, Cancellation of an input during parameter setup

Caution: Install a separate emergency stop switch in the circuit. The [STOP/RESET] key on the keypad works only when the drive has been configured to accept an input from the keypad.

Control Menu

The ACN control menu uses the following Parameter Groups for configuration. Groups with an asterisk only display when certain parameters/options are configured. See description for details.

Group	Display	Description
Operation	-	Configures basic parameters for drive operation. These include reference frequencies and acceleration or deceleration times. This group is only available on the Drive LED keypad.
Drive	dr	Configures parameters for basic operations. These include jog operation, motor capacity evaluation, torque boost, and other keypad related parameters.
Basic	bA	Configures basic parameters, including motor-related parameters and multi-step frequencies.
Advanced	Ad	Configure acceleration or deceleration patterns and to setup frequency limits.
Control	Cn	Configures sensorless vector related features.
Input Terminal	In	Configures input terminal–related features, including digital multi–functional inputs and analog inputs.
Output Terminal	OU	Configures output terminal related features such as relays and analog outputs.
Communication	Cm	Configures communication features for RS-485 or other communication options.
Application	AP	Configures PID control related sequences and operations.
Extension IO*	A0*	Configures extension IO card
Protection	Pr	Configures motor or drive protection features.
Motor 2 (Secondary Motor)**	m2	Configures secondary motor related features.
User Sequence**	US	Used to implement simple sequences with various function blocks.
User Sequence Function**	UF	

**Displays when ACN-EIO is installed*
***The secondary motor (M2) group displays when one of the multi-function input terminals (In.65–In.69) has been set to 26 (Secondary motor).*
****Group displays when AP.2 =1 or CM.95=1*

Learning to Use the Keypad

The keypad enables movement between parameter group and parameter numbers. It also enables users to select and configure functions. At the parameter number level, you can set parameter values and configure specific functions. See Chapter 4: AC Drive Parameters for detailed information.

Confirm the correct values (or the correct range of the values), and then follow the examples below to configure the drive with the keypad.

Parameter Group and Number Selection

Follow the examples below to learn how to switch between parameter groups and parameter numbers.

Step	Instruction	Keypad Display
1	Move to the parameter group you want using the Left Arrow and Right Arrow keys.	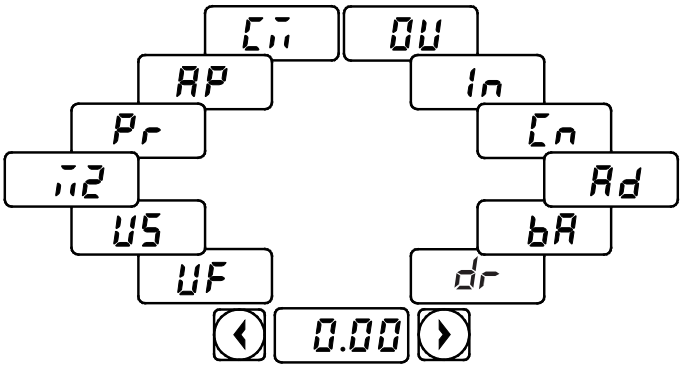
2	The operation group, shown here, scrolls through a group of 14 parameters. When other parameter groups are selected, the arrows scroll through the available numbers of each parameter group (dr.0, dr.2, dr.9, etc).	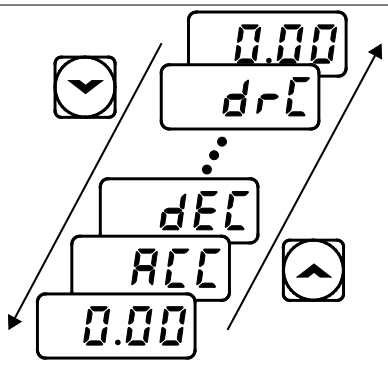
3	Press the [ENT] key to save the change.	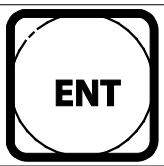

NOTE: Certain parameter groups and numbers have "parameter dependencies". These parameters will only display when other parameters are configured to the applicable settings. See the Chapter 4: AC Drive Parameters for all parameter dependencies.

As an example, if Ad.24 (Frequency Limit) is set to 0 (No), the next codes, Ad.25 (Freq Limit Lo) and Ad.26 (Freq Limit Hi), will not be displayed. If you set code Ad.24 to 1 (Yes) and enable the frequency limit feature, codes Ad.25 and 26 will appear to allow the maximum and minimum frequency limitations to be set up.

Parameter Structure and Navigation

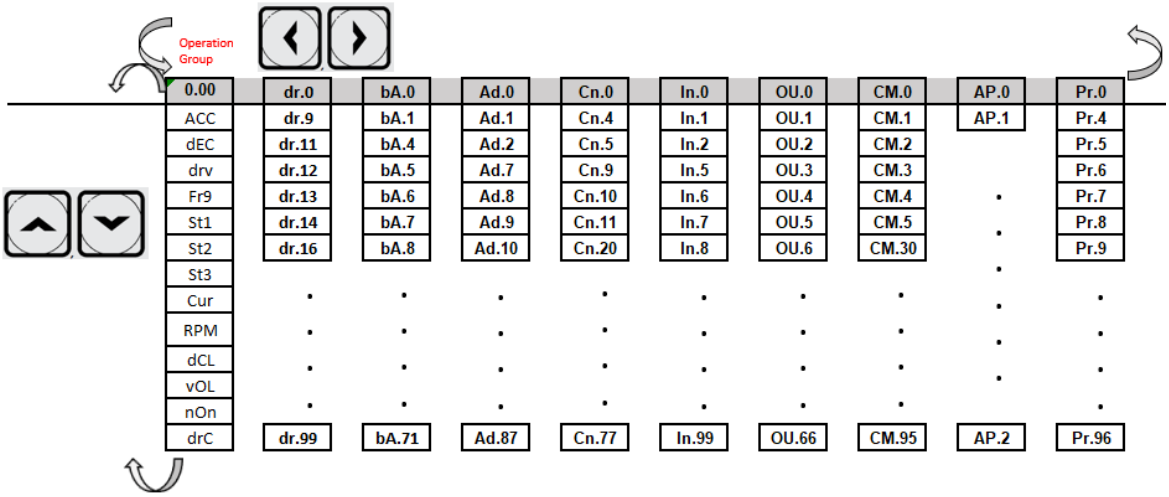

Navigating Directly to Parameter Numbers using the Jump Code

An alternative to using the up/down arrows to navigate to the parameter number is to use the parameter "Jump Code". Parameter number zero (xx.0) is the jump code for each group. The following example details navigating directly to dr.95 using the parameter dr.0 (jump code parameter):

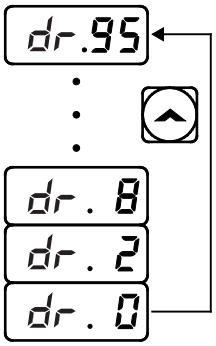

1) Ensure that you are currently at the first code of the Drive group (dr.0).
2) Press the [ENT] key. (Number '9' will flash.)
3) Press theDown Arrow key to display '5.'
4) Press the Left Arrow key to move to the 10s' place. The cursor will move to the left and '05' will be displayed. This time, the number '0' will be flashing.
5) Press the Up Arrow key to increase the number from '0' to '9.'
6) Press the [ENT] key. Code dr.95 is displayed.

Setting Parameter Values

After navigating to the specific parameter number, follow the instructions below to set the parameter values. Setting the parameter value will change the drive functionality by configuring speed references, features, alarm limits, etc.

Step	Instruction	Keypad Display
1	Navigate to a specific parameter group and number, and then press the [ENT] key. The first number on the right side of the display will flash.	
2	Press the Left Arrow or Right Arrow key to move the cursor to the number that you would like to modify.	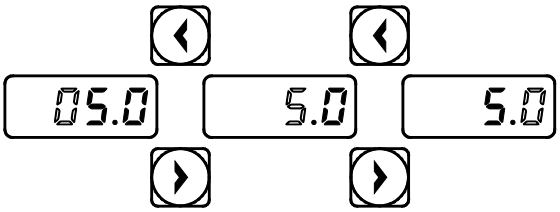
3	Press the Up Arrow or Down Arrow key to adjust the value, and then press the [ENT] key to confirm it. The selected value will flash on the display. NOTE: If a number is listed with **rd** (i.e., rd 3), this indicates the value is "reserved" and can not be selected. If a number is listed with nO (i.e n0 5) the value selection is not allowed. Other parameters may need to be modified first, before the selection is allowed.	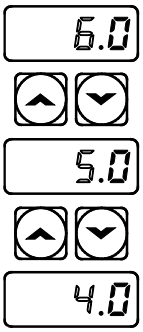
4	Press the [ENT] key again to save the change.	-

NOTE: A flashing number on the display indicates that the keypad is waiting for an input from the user. Changes will be saved when the [ENT] key is pressed while the number is flashing. The setting change will be canceled if you press any other key. Each parameter's values have default features and ranges specified. Refer to Chapter 4: AC Drive Parameters for information about the features and ranges before setting or modifying parameter values.

Configuring the [ESC] Key

The [ESC] key is a multi-functional key that can be configured to carry out a number of different functions. Refer to "Local/Remote Mode Switching" on page 4–82 for more information about the other functions of the [ESC] key. The following example shows how to configure the [ESC] key to perform a jog operation.

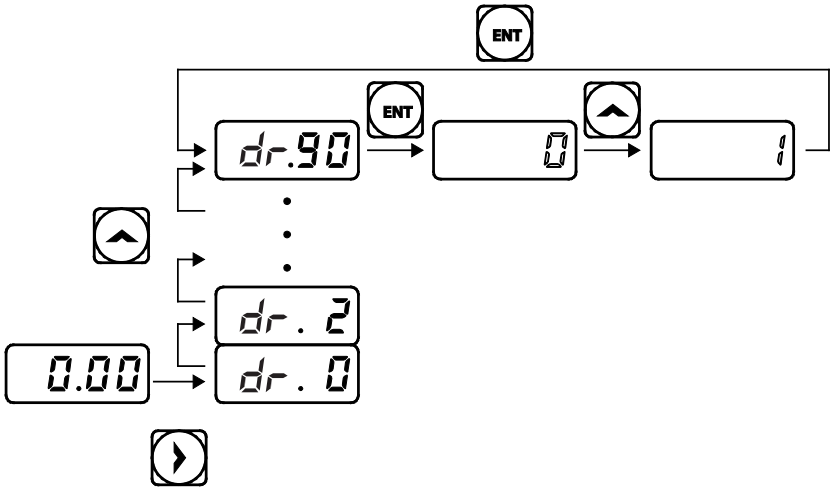

1) Ensure that you are currently at the first code of the Operation group, and that code 0.00 (Command Frequency) is displayed.

2) Press theRight Arrow key. You have moved to the initial code of the Drive group (dr.0).

3) Press the Up Arrow orDown Arrow key to select code 90 (ESC key configuration), and then press the [ENT] key. Parameter dr.90 currently has an initial parameter value of, 0 (adjust to the initial position).

4) Press the Up Arrow key to modify the value to 1 (Jog key) and then press the [ENT] key. The new parameter value will flash.

5) Press the [ENT] key again to save changes.

NOTE:

- *If the code dr.90 (ESC key configuration) is set to 1 (JOG Key) or 2 (Local/Remote), the SET indicator will flash when the [ESC] key is pressed.*
- *The factory default setting for code dr.90 is 0 (move to the initial position). You can navigate back to the initial position (code 0.00 of the Operation group) immediately, by pressing the [ESC] key while configuring any parameters in any groups.*

Actual Application Examples

Acceleration Time Configuration

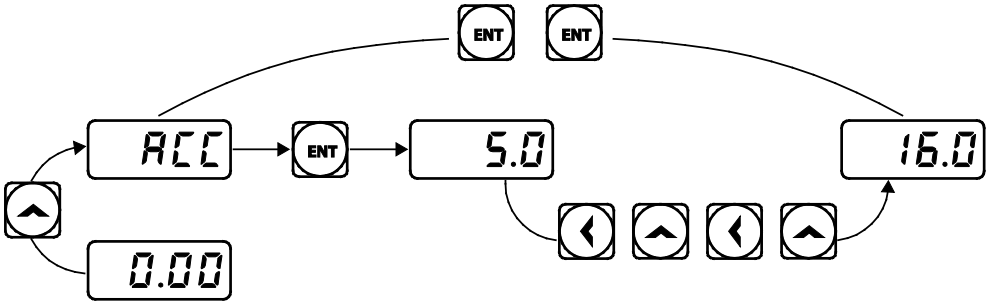

The following is an example demonstrating how to modify the ACC (Acceleration time) parameter value (from 5.0 to 16.0) from the Operation group.

1) Ensure that the first parameter of the Operation group is selected, and parameter 0.00 (Command Frequency) is displayed.

2) Press the Up Arrow key. The display will change to the second parameter in the Operation group, ACC (Acceleration Time).

3) Press the [ENT] key. The number '5.0' will be displayed, with '0' flashing. This indicates that the current acceleration time is set to 5.0 seconds. The flashing value is ready to be modified by using the keypad.

4) Press the Left Arrow key to change the first place value. '5' will be flashing now. This indicates the flashing value, '5' is ready to be modified.

5) Press the Up Arrow key to change the number '5' into '6', the first place value of the target number '16.

6) Press the Left Arrow key to move to the 10s, place value. The number in the 10s position, '0' in '06' will start to flash.

7) Press the Up Arrow key to change the number from '0' to '1', to match the 10s place value of the target number'16,' and then press the [ENT] key. Both digits will flash on the display.

8) Press the [ENT] key once again to save changes. 'ACC' will be displayed. The change to the acceleration time parameter has been completed.

Frequency Reference Configuration

The following is an example to demonstrate configuring a frequency reference of 30.05 (Hz) from the first parameter in the Operation group (0.00).

1) Ensure that the first parameter of the Operation group is selected. 0.00 (Command Frequency) is displayed.

2) Press the [ENT] key. The value, 0.00 will be displayed with the '0' in the 1/100s place value flashing.

3) Press the Left Arrow key 3 times to move to the 10s place value. The '0' at the 10s place value will start to flash.

4) Press the Up Arrow key to change it to '3,' the 10s place value of the target frequency, '30.05.'

5) Press theRight Arrow key 3 times. The '0' at the 1/100s place position will flash.

6) Press the Up Arrow key to change it to '5,' the 1/100 place value of the target frequency, '30.05,' and then press the [ENT] key. The parameter value will flash on the display.

7) Press the [ENT] key once again to save changes. Flashing stops. The frequency reference has been configured to 30.05 Hz.

Note: A flashing number on the display indicates that the keypad is waiting for an input from the user. Changes are saved when the [ENT] key is pressed while the value is flashing. Changes will be canceled if any other key is pressed. The ACN drive keypad display can show up to 4 digits. However, 5-digit figures can be used and are accessed by pressing the Left or Right arrow key, to allow keypad input.

Jog Frequency Configuration

The following example demonstrates how to configure Jog Frequency by modifying Drive Group parameter 11 (dr. 11) from 10.00(Hz) to 20.00(Hz). You can configure the parameters in any other group in exactly the same way.

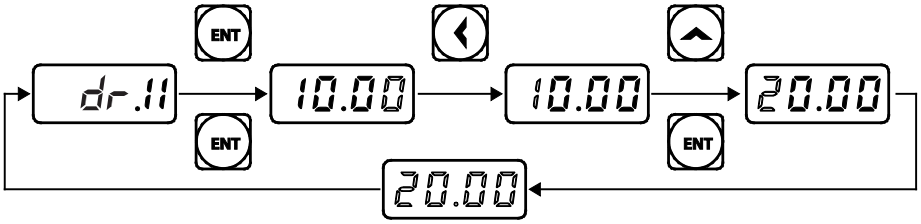

1) Go to Parameter dr.11 (Jog Frequency).
2) Press the [ENT] key. The current Jog Frequency value (10.00) for parameter dr.11 is displayed.
3) Press the Left Arrow key 3 times to move to the 10s place value. Number '1' at the 10s place position will flash.
4) Press the Up Arrow key to change the value to '2,' to match the 10s place value of the target value'20.00,' and then press the [ENT] key. All parameter digits will flash on the display.
5) Press the [ENT] key once again to save the changes. Parameter dr.11 will be displayed. The parameter change has been completed.

Initializing All Parameters (Reset to Defaults)

To reset the drive parameters to factory default settings, utilize dr.93, (Drive Group Parameter 93- parameter initialization). Once executed, all parameters will be set back to original settings.

Note: This can be helpful when parameter dependencies are preventing certain parameters from displaying.

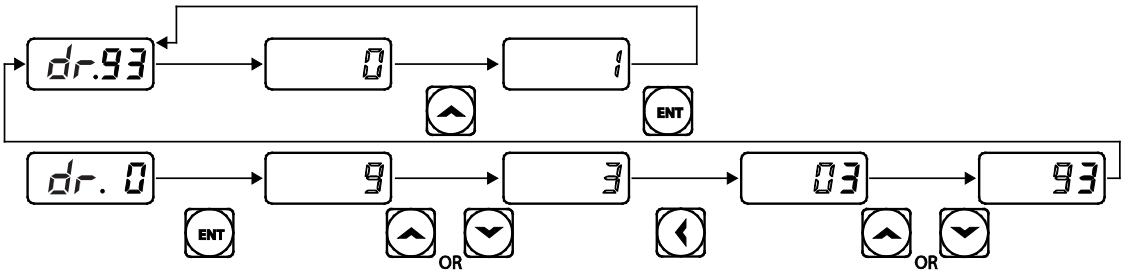

1) Go to parameter dr. 0.
2) Use the Jump Code or press the Down Arrow key to display dr.93.
3) Press the [ENT] key. The current parameter value for code dr.93 is set to 0 (Do not initialize).
4) Press the Up Arrow key to change the value to 1 (All Grp), and then press the [ENT] key. The parameter value will flash.
5) Press the [ENT] key once again. Parameter initialization begins. Parameter initialization is complete when code dr.93 reappears on the display.

NOTE: Following parameter initialization, all parameters are reset to factory default values. Ensure that parameters are reconfigured before running the drive again after an initialization.

Frequency Setting (Keypad) and Operation (via Terminal Input)

1) Turn on the drive.
2) Ensure that the first parameter of the Operation group (Command Frequency) is selected (0.00 is displayed). Then press the [ENT] key. The first digit on the right will flash.
3) Press the Left Arrow key 3 times to go to the 10s place position. The number '0' at the 10s place position will flash.
4) Press the Up Arrow key to change it to 1, and then press the [ENT] key. The parameter value (10.00) will flash.
5) Press the [ENT] key once again to save changes. A change of reference frequency to 10.00 Hz has been completed.
6) Refer to the wiring diagram at the bottom of the table, and close the switch between the P1 (FX) and CM terminals. The RUN indicator light flashes and the FWD indicator light comes on steady. The current acceleration frequency is displayed.
7) When the frequency reference is reached (10Hz), open the switch between the P1 (FX) and CM terminals. The RUN indicator light flashes again and the current deceleration frequency is displayed. When the frequency reaches 0Hz, the RUN and FWD indicator lights turn off, and the frequency reference (10.00Hz) is displayed again.

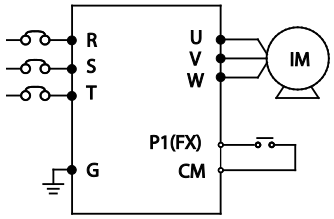

Wiring Diagram

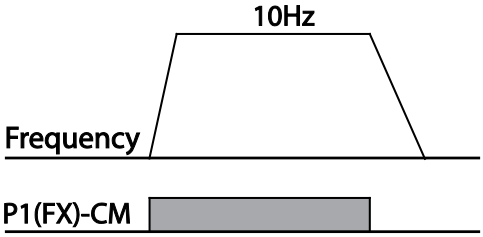

Operation Pattern

NOTE: The instructions in the table are based on the factory default parameter settings. The drive may not work correctly if the default parameter settings are changed after the drive is purchased. In such cases, initialize all parameters to reset the values to factory default parameter settings before following the instructions in the table (refer to Initializing All Parameters (Reset to Defaults) on page 3–12*).*

Frequency Setting (Potentiometer) and Operation (Terminal Input)

1) Turn on the drive.
2) Ensure that the first parameter of the Operation group (Command Frequency) is selected (0.00 is displayed). Then press the [ENT] key. The first digit on the right will flash.
3) Press the Up Arrow key 4 times to go to the Frq (Frequency reference source) parameter.
4) Press the [ENT] key. The Frq parameter in the Operation group is currently set to 0 (keypad).
5) Press the Up Arrow key to change the parameter value to 2 (Potentiometer), and then press the [ENT] key. The new parameter value will flash.
6) Press the [ENT] key once again. The Frq parameter will be displayed again. The frequency input has been configured for the potentiometer.
7) Press theDown Arrow key 4 times. Returns to the first parameter of the Operation group (0.00).From here frequency setting values can be monitored.
8) Adjust the potentiometer to increase or decrease the frequency reference to 10Hz.
9) Refer to the wiring diagram at the bottom of the table, and close the switch between the P1 (FX) and CM terminals. The RUN indicator light flashes and the FWD indicator light comes on steady. The current acceleration frequency is displayed.
10) When the frequency reference is reached (10Hz), open the switch between the P1 (FX) and CM terminals. The RUN indicator light flashes again and the current deceleration frequency is displayed. When the frequency reaches 0Hz, the RUN and FWD indicators turn off, and the frequency reference (10.00Hz) is displayed again.

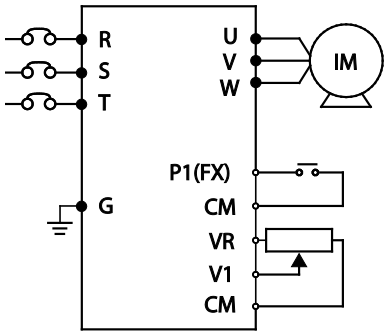

Wiring Diagram

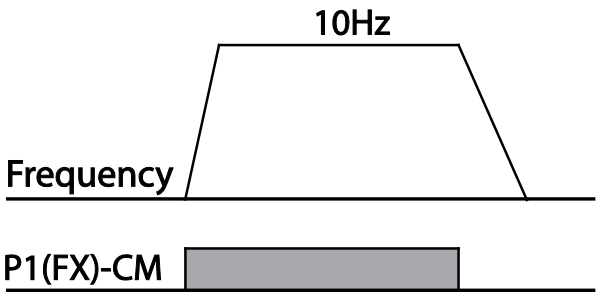

Operation Pattern

NOTE: The instructions in the table are based on the factory default parameter settings. The drive may not work correctly if the default parameter settings are changed after the drive is purchased. In such cases, initialize all parameters to reset the factory default parameter settings before following the instructions in the table (refer to Initializing All Parameters (Reset to Defaults) on page 3–12*).*

Frequency Setting (Potentiometer) and Operation (Keypad)

1) Turn on the drive.
2) Ensure that the first parameter of the Operation group (Command Frequency) is selected (0.00 is displayed). Then press the [ENT] key. The first digit on the right will flash.
3) Press the Up Arrow key 3 times to go to the drv parameter.
4) Press the [ENT] key.
5) The drv parameter in the Operation group is currently set to 1 (Fx/Rx-1 input terminal).
6) Press theDown Arrow key to change the parameter value to 0 (Keypad), and then press the [ENT] key.
7) The new parameter value will flash.
8) Press the [ENT] key once again.
9) The drv parameter is displayed again. The frequency input has been configured for the keypad.
10) Press the Up Arrow key.
11) To move to the Frq (Frequency reference source) parameter.
12) Press the [ENT] key.
13) The Frq parameter in the Operation group is set to 0 (Keypad).
14) Press the Up Arrow key to change it to 2 (Potentiometer), and then press the [ENT] key.
15) The new parameter value will flash.
16) Press the [ENT] key once again.
17) The Frq parameter is displayed again. The frequency input has been configured for potentiometer.
18) Press theDown Arrow key 4 times.
19) Returns to the first parameter of the Operation group (0.00). From here frequency setting values can be monitored.
20) Adjust the potentiometer to increase or decrease the frequency reference to 10Hz.
21) Press the [RUN] key on the keypad.
22) The RUN indicator light flashes and the FWD indicator light comes on steady. The current acceleration frequency is displayed.
23) When the frequency reaches the reference (10Hz), press the [STOP/RESET] key on the keypad.
24) The RUN indicator light flashes again and the current deceleration frequency is displayed. When the frequency reaches 0Hz, the RUN and FWD indicator lights turn off, and the frequency reference (10.00Hz) is displayed again.

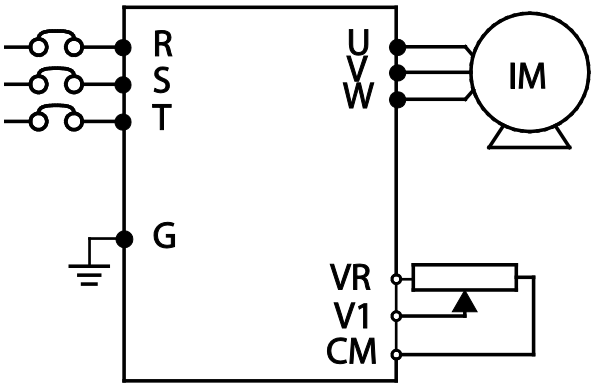

Wiring Diagram

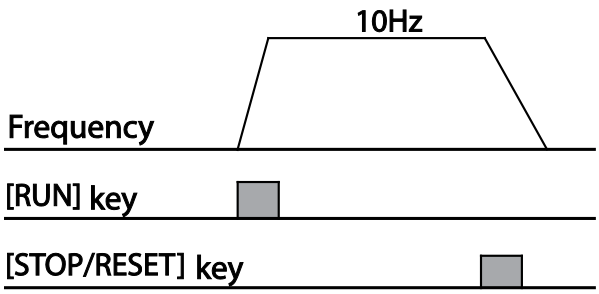

Operation Pattern

NOTE: The instructions in the table are based on the factory default parameter settings. The drive may not work correctly if the default parameter settings are changed after the drive is purchased. In such cases, initialize all parameters to reset the factory default parameter settings before following the instructions in the table (refer to Initializing All Parameters (Reset to Defaults) on page 3–12*).*

Monitoring the Operation

Output Current Monitoring

The following example demonstrates how to monitor the output current in the Operation group using the keypad.

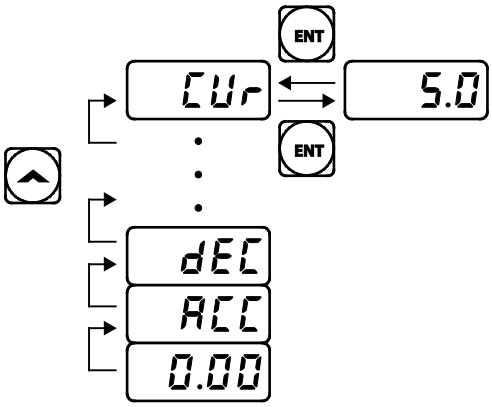

1) Ensure that the first code of the Operation group is selected, and 0.00 (Command Frequency) is displayed.
2) Press the Up Arrow orDown Arrow key to move to the Cur parameter.
3) Press the [ENT] key. The output current (5.0A) is displayed.
4) Press the [ENT] key again. Returns to the Cur parameter.

NOTE: You can use the DCL (DC link voltage monitor) and vOL (output voltage monitor) parameters in the Operation group in exactly the same way as shown in the example above, to monitor each function's relevant values.

Fault Trip Monitoring

The following example demonstrates how to monitor fault trip conditions in the Operation group using the keypad.

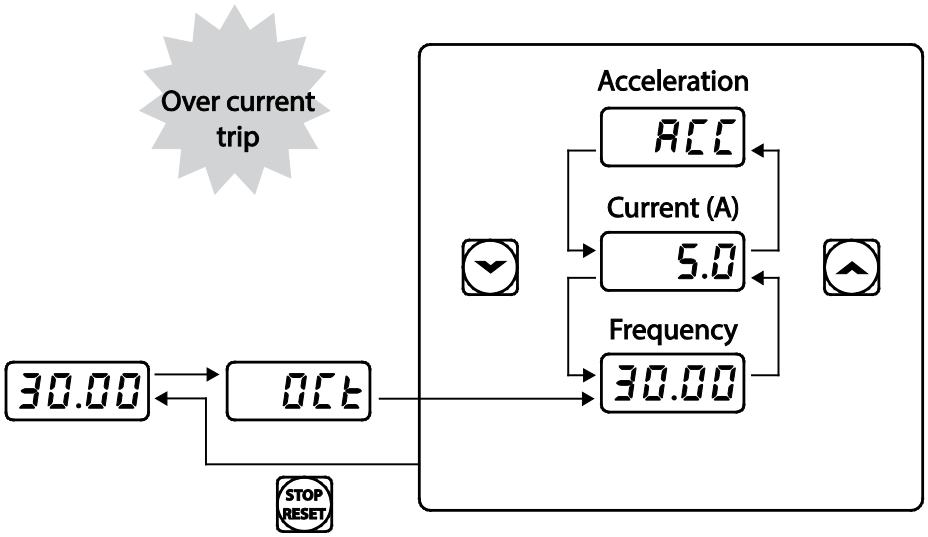

1) Refer to the example keypad display. An over current trip fault has occurred.
2) Press the [ENT] key, and then the Up Arrow key. The operation frequency at the time of the fault (30.00Hz) is displayed.

3) Press the Up Arrow key. The output current at the time of the fault (5.0A) is displayed.

4) Press the Up Arrow key. The operation status at the time of the fault is displayed. ACC on the display indicates that the fault occurred during acceleration.

5) Press the [STOP/RESET] key. The drive resets and the fault condition is cleared. The frequency reference is displayed on the keypad.

NOTE:

- *If multiple fault trips occur at the same time, a maximum of 3 fault trip records can be retrieved as shown in the following example:*

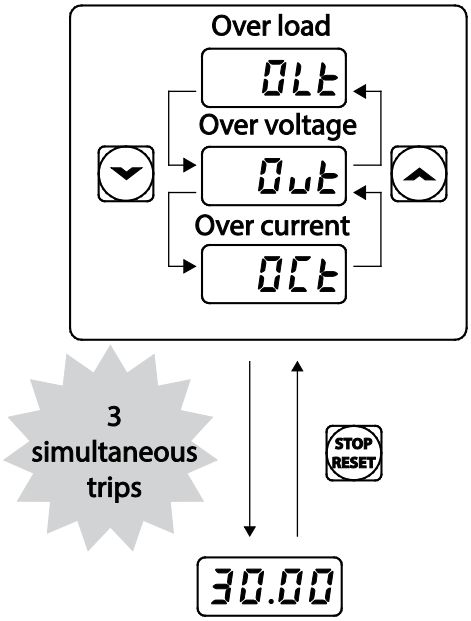

- *If a warning condition occurs while running at a specified frequency, the current frequency and the signal will be displayed alternately, at 1 second intervals. Refer to* "Fault Trips" on page 6–8 *for more details.*