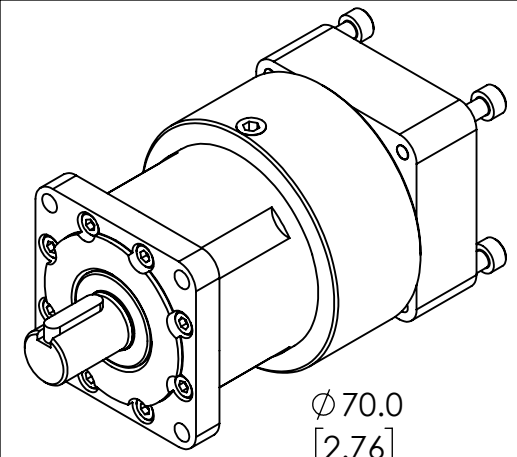

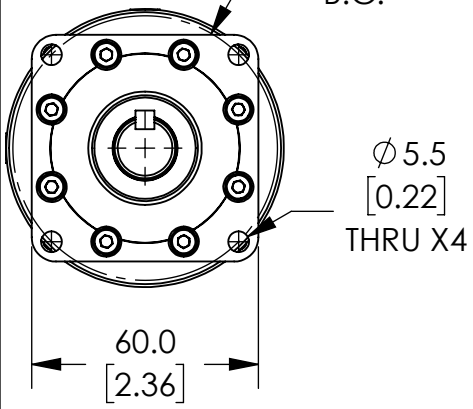

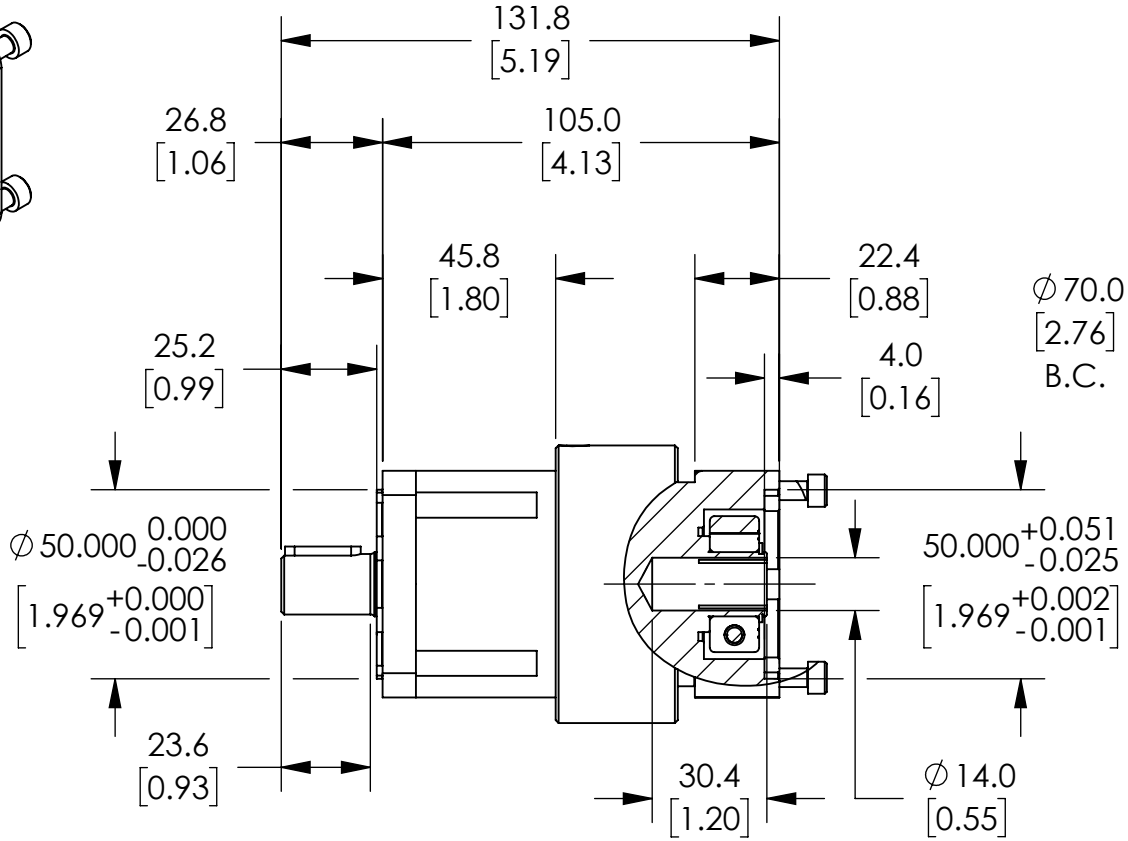

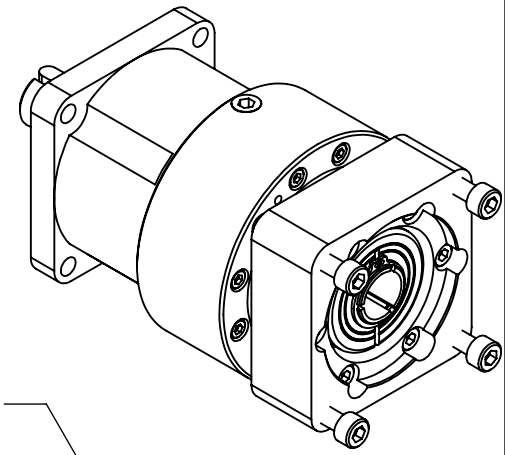

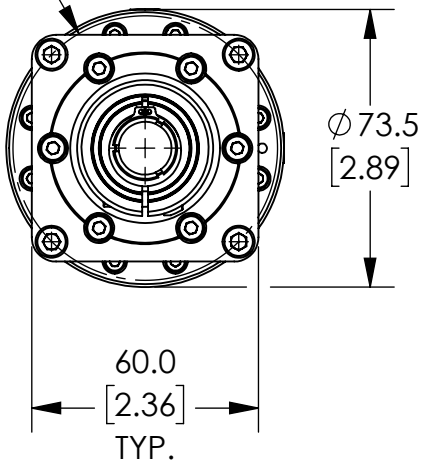

INCLUDED HARDWARE		
DESCRIPTION	SIZE	QTY
BOLT SIZE	M5-0.8 X 30MM SHCS	4
ROUNDED MACHINE KEY	5 X 5 X 20MM	1

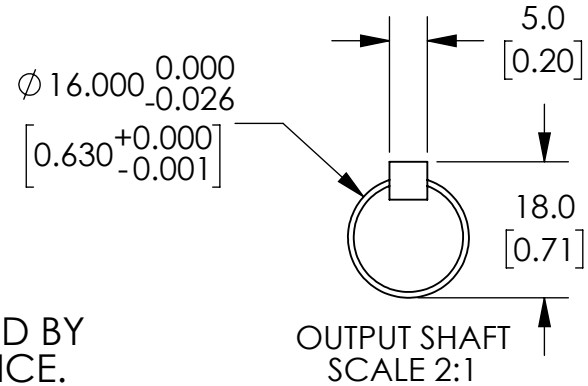

NOTES:

1. DIMENSIONS CAN BE CHANGED BY MANUFACTURER WITHOUT NOTICE.
2. DIMENSIONS DO NOT IMPLY TOLERANCE.

HPGA073-50A2

Units: mm [inch]

Scale: Full

SURE GEAR HIGH PRECISION STRAIN WAVE GEARBOX-50:1 RATIO, SVL-202(B)/SVL-204(B)

AUTOMATIONDIRECT.com