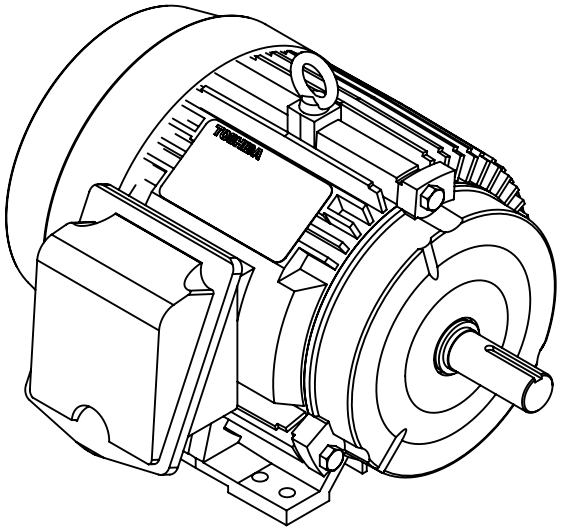

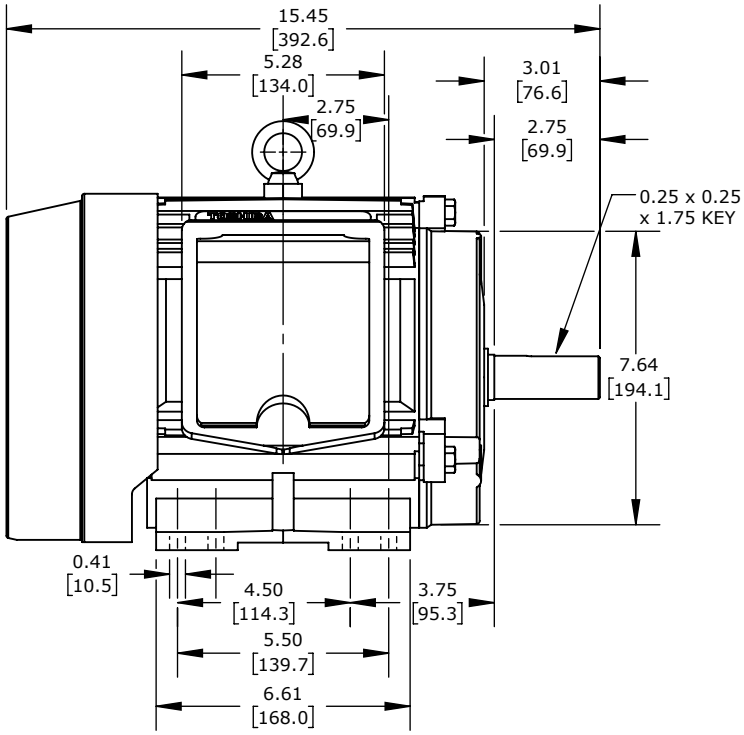

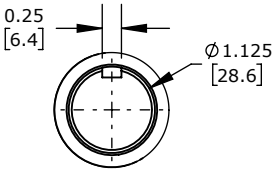

DETAIL A
SCALE 2:1

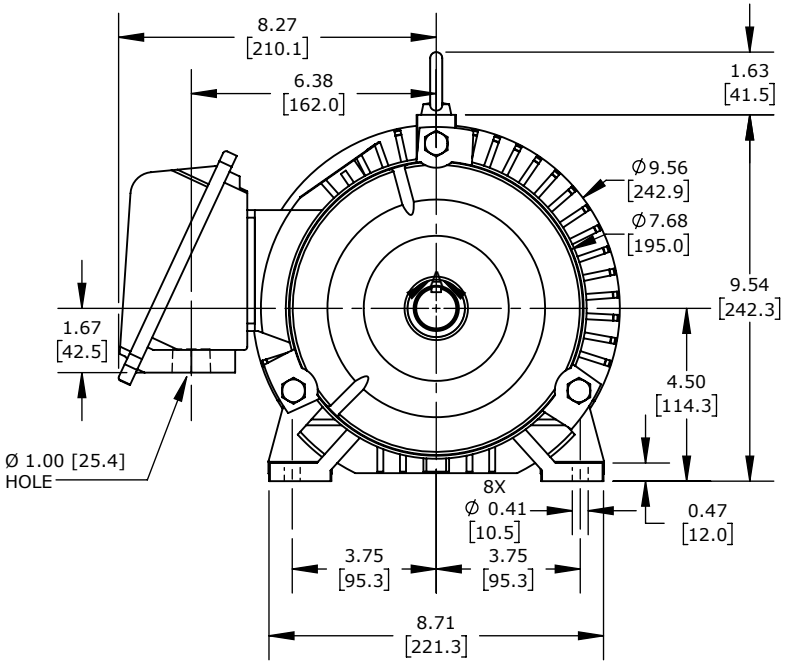

TOSHIBA SD SERIES PREMIUM EFFICIENCY AC INDUCTION MOTOR, GENERAL PURPOSE, INVERTER RATED & HAZARDOUS LOC, 1-1/2HP, 3-PH, 230/460 VAC, 1200RPM, TEFC, 182T FRAME, CAST IRON, RIGID BASE ONLY MOUNT			Y156SDSR41A-P				AutomationDirect.com 1-800-633-0405
3rd ANGLE	NOT TO SCALE	PART DIMENSIONS MAY DIFFER SLIGHTLY DUE TO MANUFACTURER'S VARIANCES	METRIC UNITS USED FOR PART DESIGN	UNLESS OTHERWISE SPECIFIED UNITS ARE:	**inch** **[mm]**	LATEST VERSION 6/19/2023	SHEET 1 OF 1