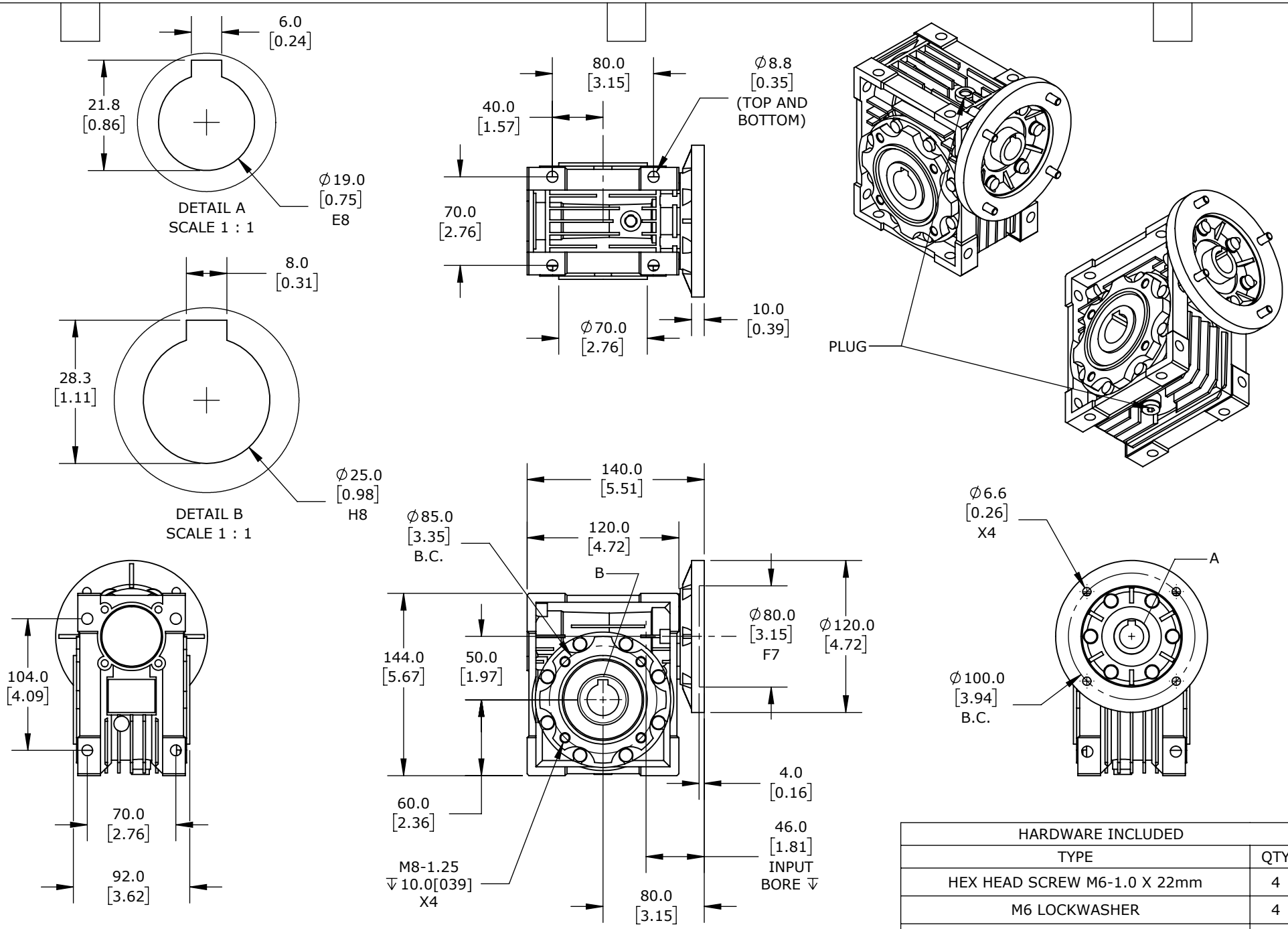

HARDWARE INCLUDED	
TYPE	QTY
HEX HEAD SCREW M6-1.0 X 22mm	4
M6 LOCKWASHER	4
PLUG M10-1.0	2

IRONHORSE WORM GEARBOX: IEC-80B14 , 10:1

WGA-50M-020-80B14

AutomationDirect.com
1-800-633-0405

3rd ANGLE	NOT TO SCALE	PART DIMENSIONS MAY DIFFER SLIGHTLY DUE TO MANUFACTURER'S VARIANCES	METRIC UNITS USED FOR PART DESIGN	UNLESS OTHERWISE SPECIFIED UNITS ARE:	**mm [inch]**	LATEST VERSION 2/20/2025	SHEET 1 OF 1