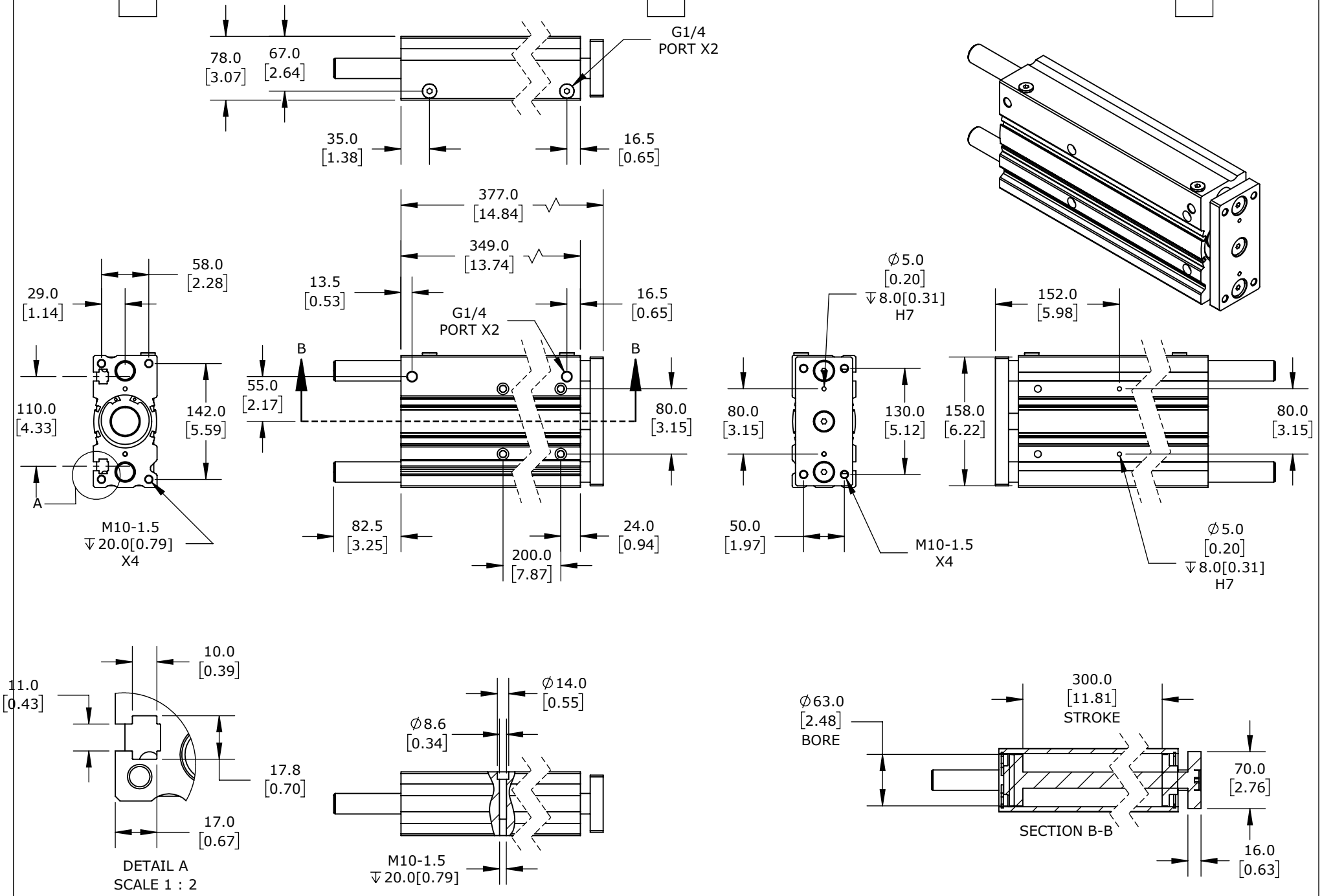

METAL WORK PNEUMATIC CYLINDER	W143063A300N	AutomationDirect.com 1-800-633-0405

3rd ANGLE	NOT TO SCALE	PART DIMENSIONS MAY DIFFER SLIGHTLY DUE TO MANUFACTURER'S VARIANCES	METRIC UNITS USED FOR PART DESIGN	UNLESS OTHERWISE SPECIFIED UNITS ARE:	**mm [inch]**	LATEST VERSION 5/29/2025	SHEET 1 OF 1