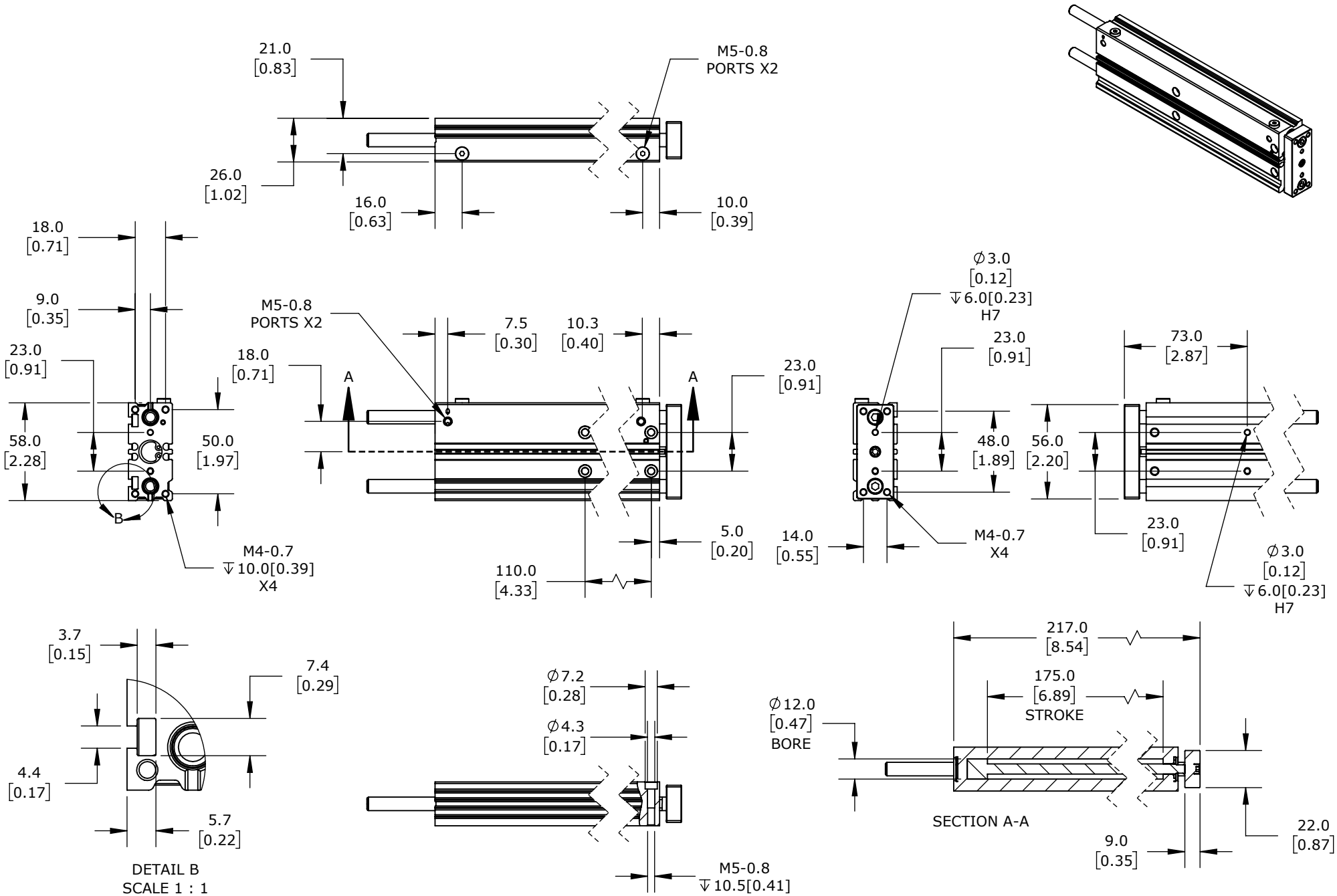

METAL WORK PNEUMATIC CYLINDER	W143012A175N	AutomationDirect.com 1-800-633-0405

3rd ANGLE	NOT TO SCALE	PART DIMENSIONS MAY DIFFER SLIGHTLY DUE TO MANUFACTURER'S VARIANCES	METRIC UNITS USED FOR PART DESIGN	UNLESS OTHERWISE SPECIFIED UNITS ARE: **mm** **[inch]**	MODEL REV.	DRAWING DATE 7/1/2026	SHEET 1 OF 1