GENERAL NOTES:

1.) LED 2 X 2, 90° (1X GREEN, STATUS)
(1X YELLOW, SWITCHING OUTPUT)
2.) SOUND OUTLET ULTRASONIC TRANSDUCER

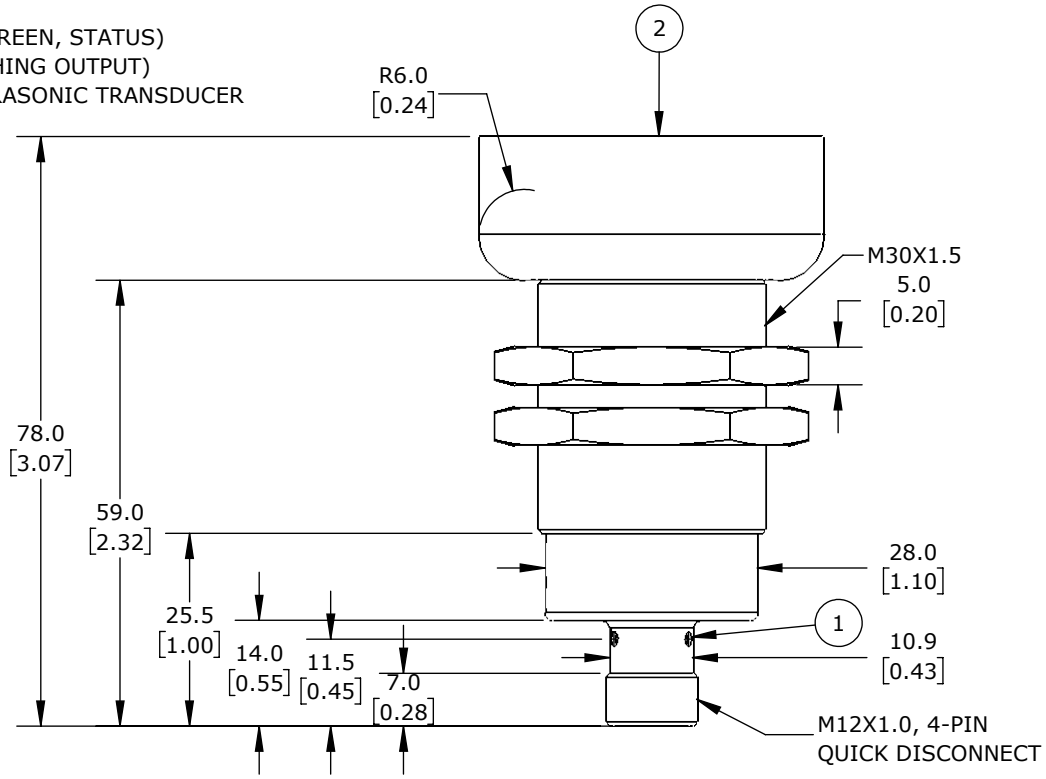

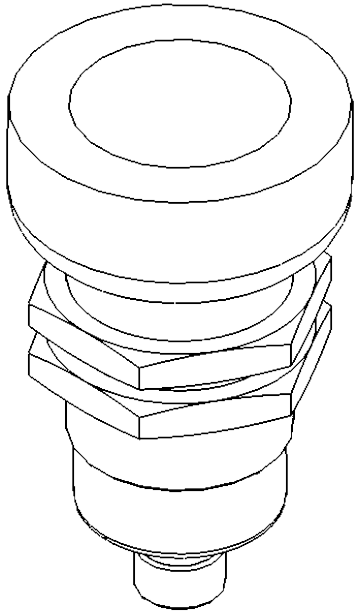

ISOMETRIC VIEW

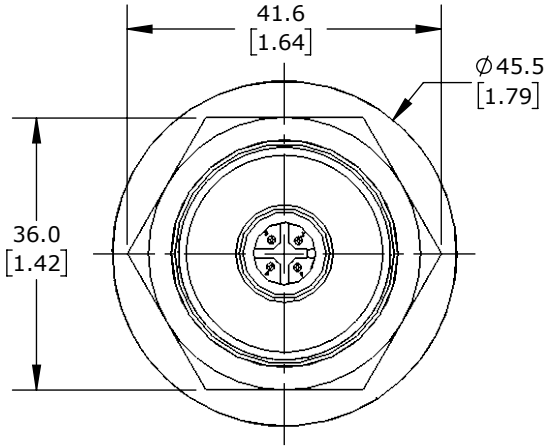

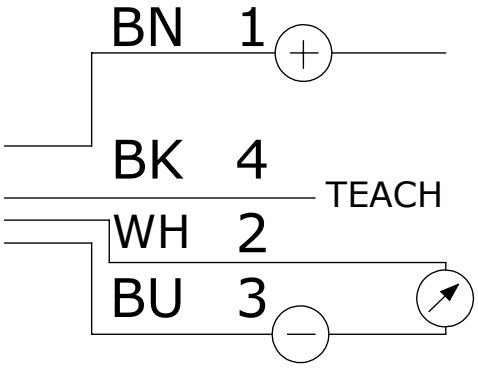

BK: BLACK BN: BROWN BU:BLUE WH: WHITE

di-soric ULTRASONIC SENSORS				US30M6000IU-B4			AutomationDirect.com 1-800-633-0405
3rd ANGLE	NOT TO SCALE	PART DIMENSIONS MAY DIFFER SLIGHTLY DUE TO MANUFACTURER'S VARIANCES	METRIC UNITS USED FOR PART DESIGN	UNLESS OTHERWISE SPECIFIED UNITS ARE: **mm** **[inch]**	MODEL REV. --	DRAWING DATE 1/28/2026	SHEET 1 OF 1