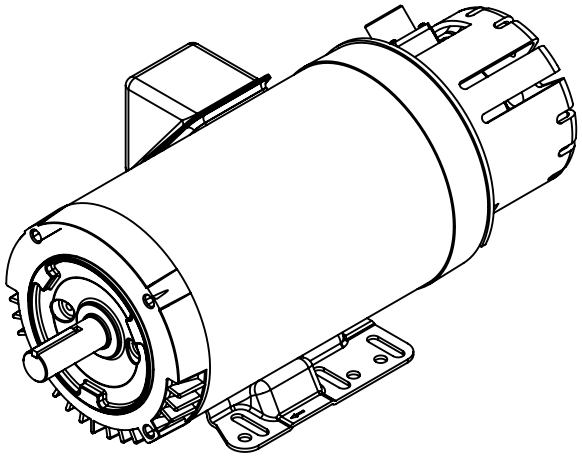

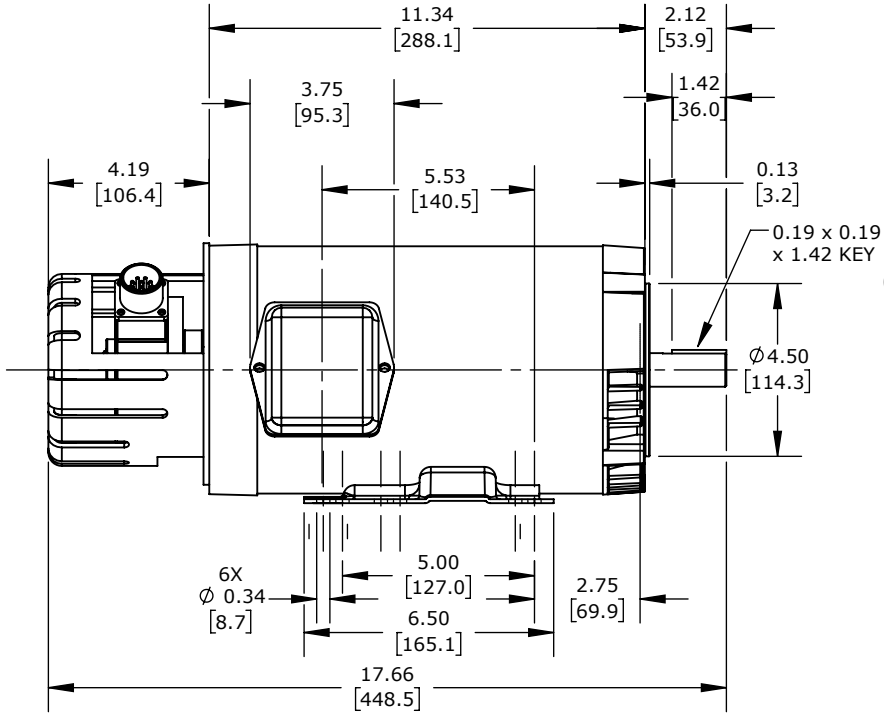

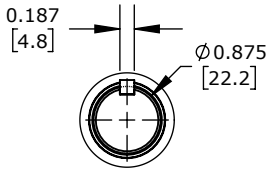

DETAIL A
SCALE 2:1

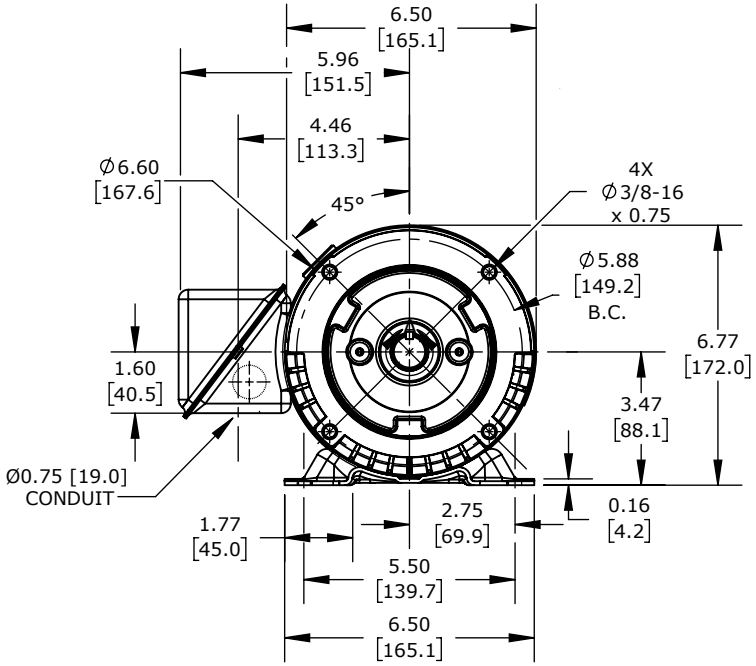

U.S. MOTORS ACCU-TORQ PREMIUM EFFICIENCY AC INDUCTION MOTOR, HIGH-PERFORMANCE INVERTER DUTY, 2HP, 3-PHASE, 230/460 VAC, 1800RPM, TENV, NEMA 145TC FRAME, ROLLED STEEL, C-FACE/RIGID BASE MOUNT, AVTRON HS35A ENCODER INCLUDED			UN2T2BC-HS35A				AutomationDirect.com 1-800-633-0405
3rd ANGLE	NOT TO SCALE	PART DIMENSIONS MAY DIFFER SLIGHTLY DUE TO MANUFACTURER'S VARIANCES	INCH UNITS USED FOR PART DESIGN	UNLESS OTHERWISE SPECIFIED UNITS ARE:	**inch** **[mm]**	LATEST VERSION 8/27/2024	SHEET 1 OF 1