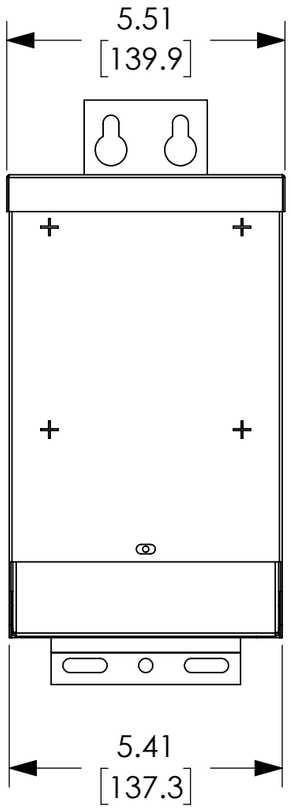

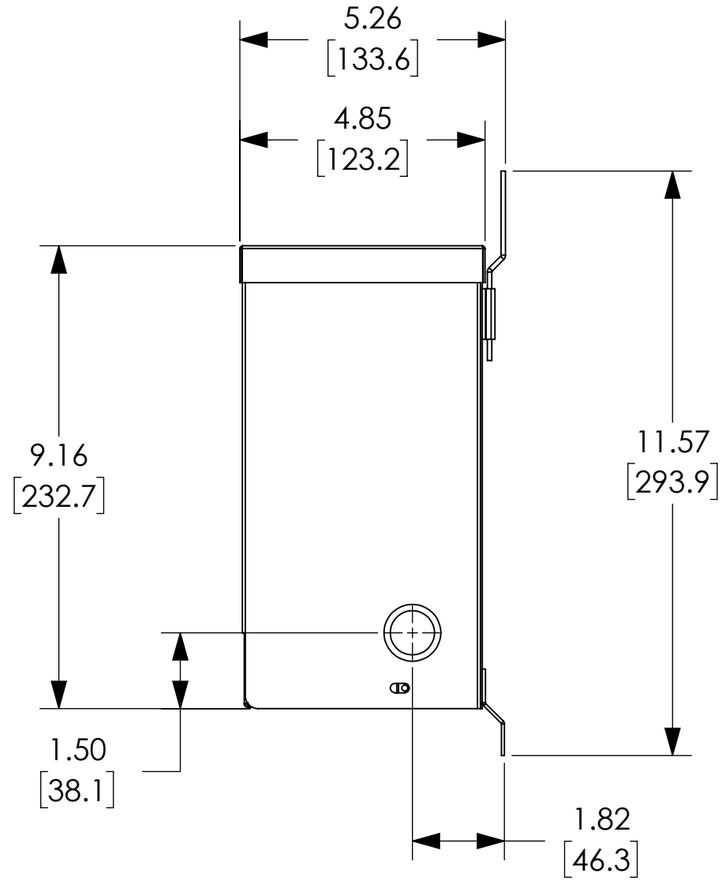

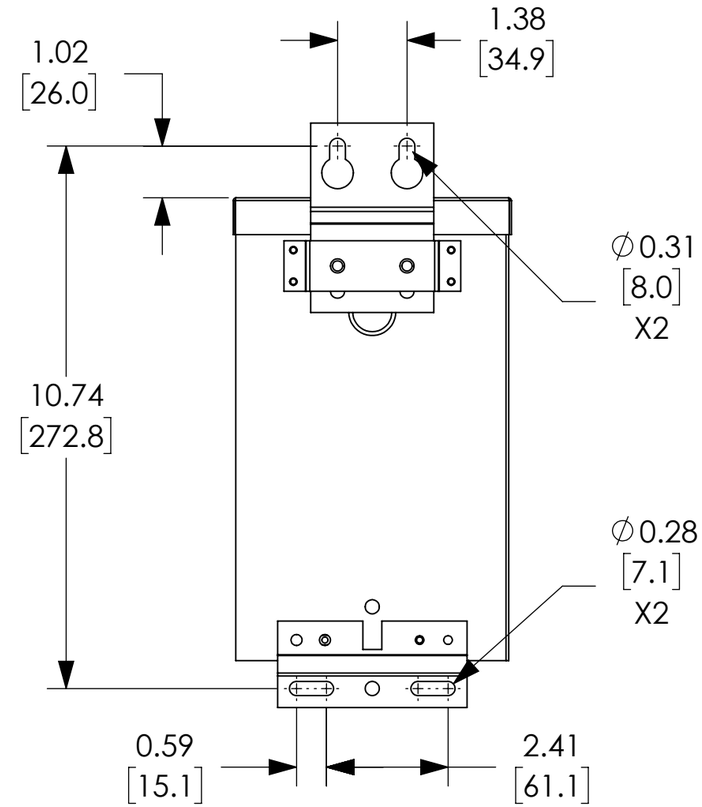

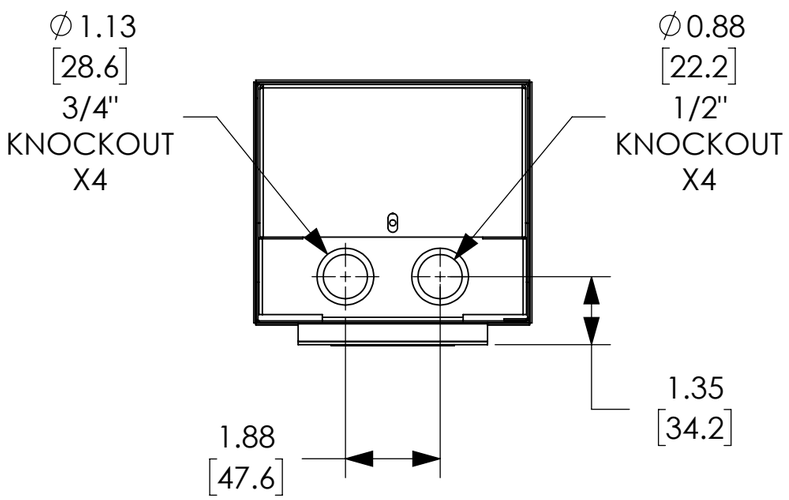

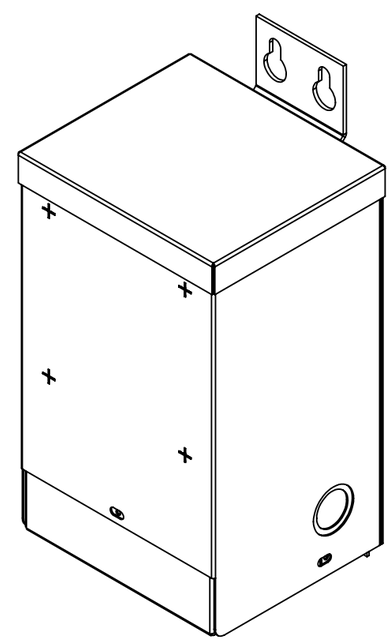

NOTES:

1. DIMENSIONS CAN BE CHANGED BY MANUFACTURER WITHOUT NOTICE.
2. DIMENSIONS DO NOT IMPLY TOLERANCE.

T137921

Units: inches [mm]

Scale: Full

ACME BUCK-BOOST TRANSFORMER, ENCAPSULATED CORE, 1.5 KVA

AUTOMATIONDIRECT.com