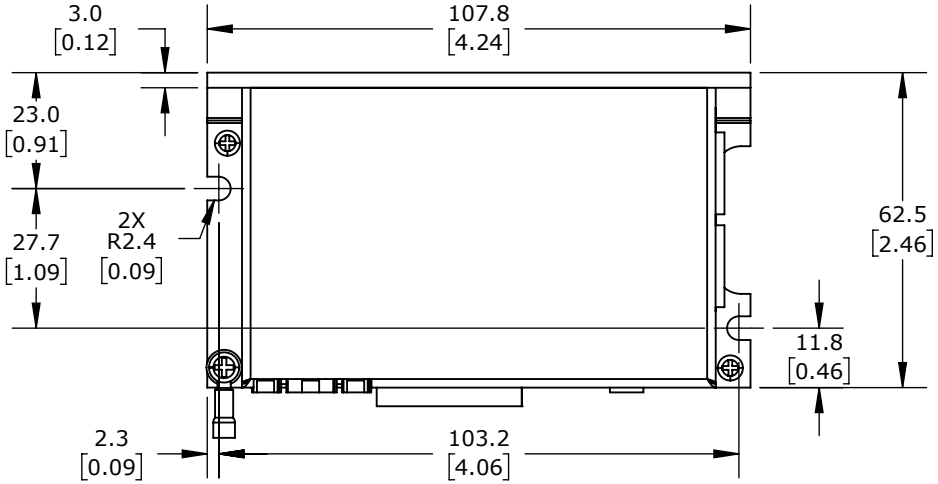

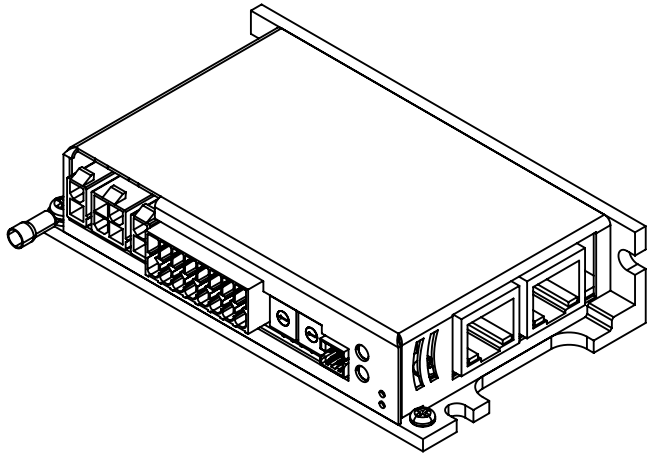

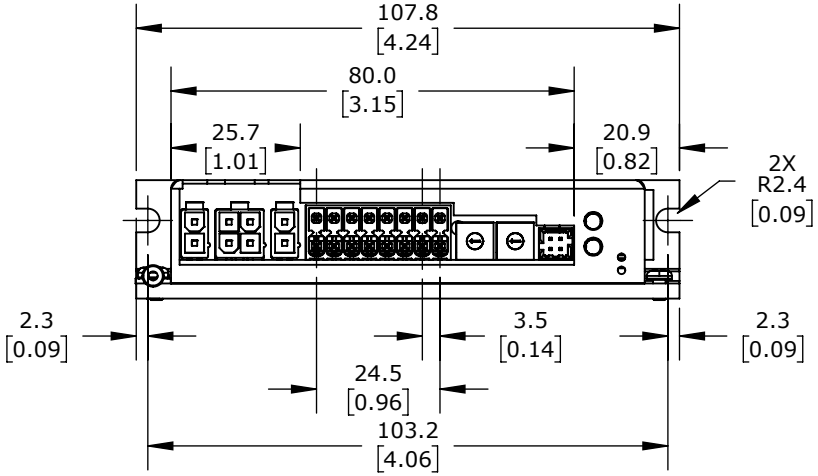

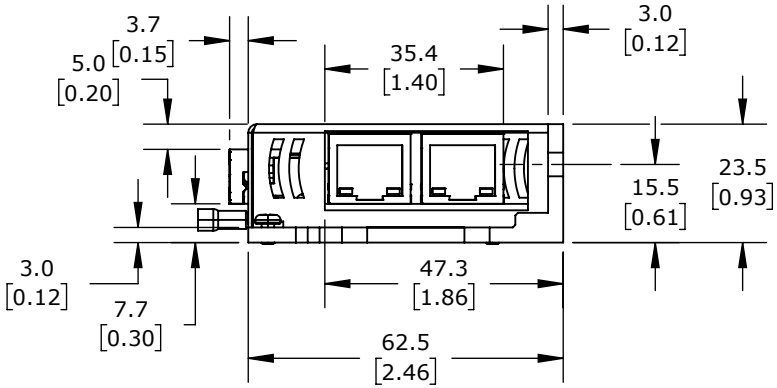

EVER MOTION SOLUTIONS DC OPEN LOOP MICROSTEPPING STEPPER DRIVE, 4.2A PER PHASE, 2-PHASE OUTPUT, 12-48 VDC, BIPOLAR, VELOCITY AND POSITION MODE, 200 TO 65536 STEPS PER REVOLUTION, (2) ETHERNET 100BASE-TX (RJ45) AND (1) 4-PIN TERMINAL PORT(s)			SW3D2042H241-01				AutomationDirect.com 1-800-633-0405
3rd ANGLE	NOT TO SCALE	PART DIMENSIONS MAY DIFFER SLIGHTLY DUE TO MANUFACTURER'S VARIANCES	METRIC UNITS USED FOR PART DESIGN	UNLESS OTHERWISE SPECIFIED UNITS ARE:	**mm [inch]**	LATEST VERSION 7/28/2025	SHEET 1 OF 1