# SAGINAW CONTROL & ENGINEERING
# SCE-N68C7818SS6

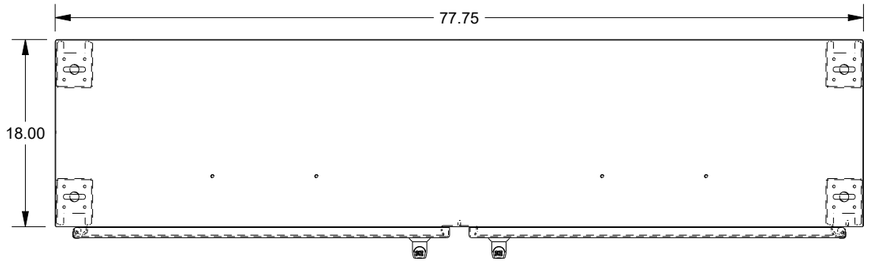


TOP VIEW

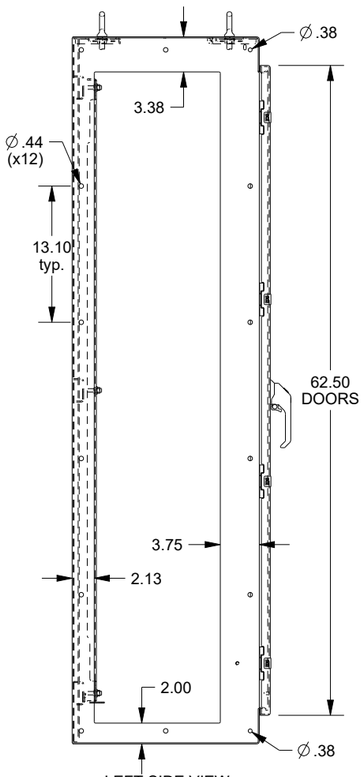


LEFT SIDE VIEW

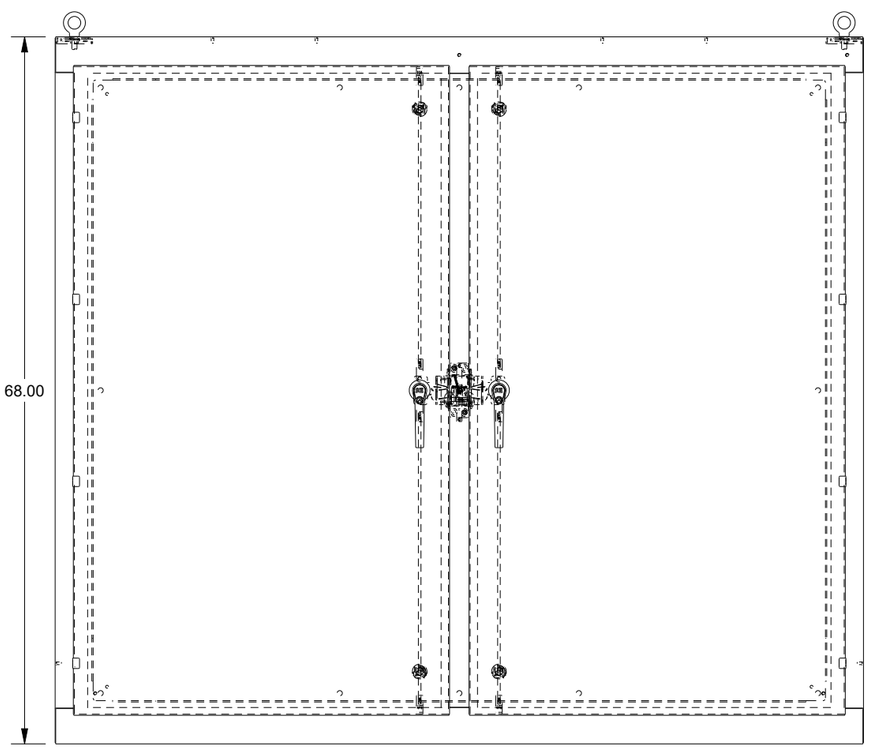


FRONT VIEW

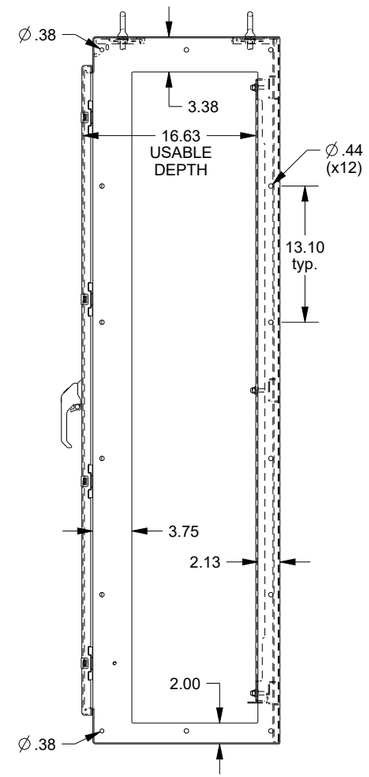


RIGHT SIDE VIEW

PROVISIONS FOR A STUD MOUNTED
60.00"H x 70.75"W SUBPANEL ON
BODY BRACES ON THE REAR WALL

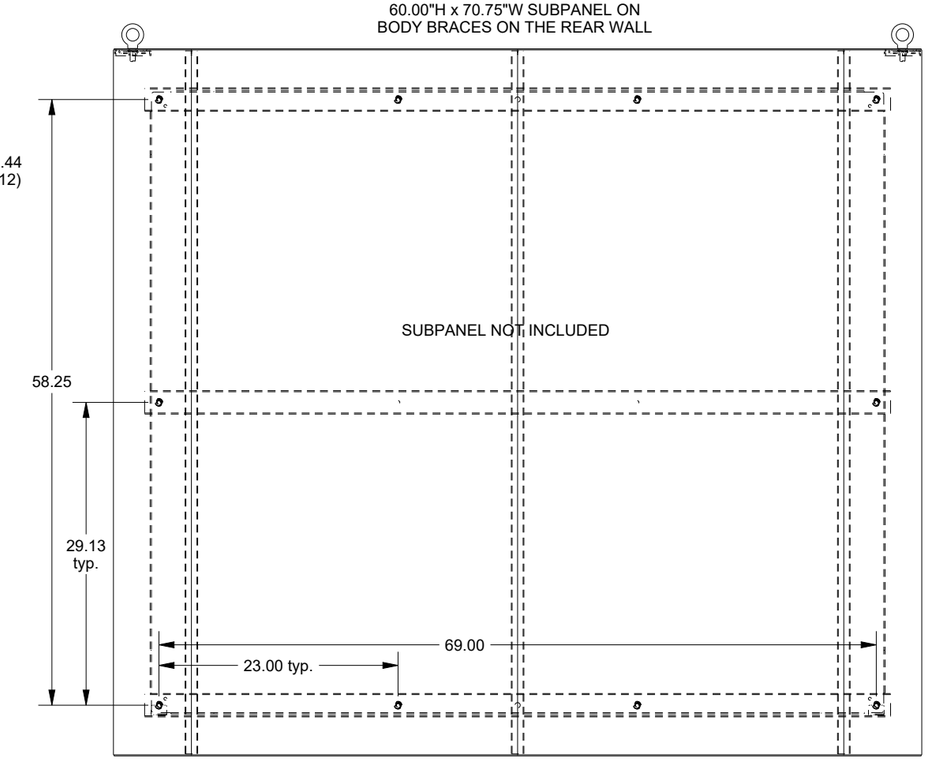


EXTERNAL REAR VIEW

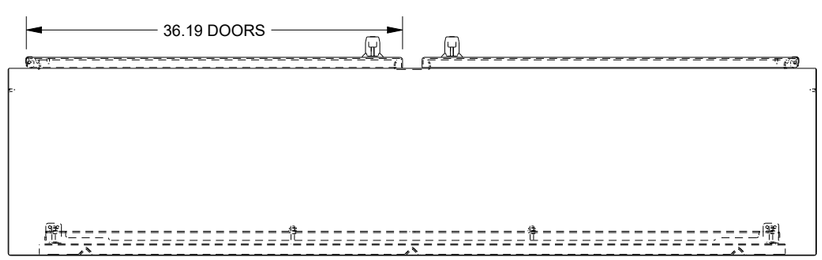


BOTTOM VIEW

DATA SUBJECT TO CHANGE WITHOUT NOTICE