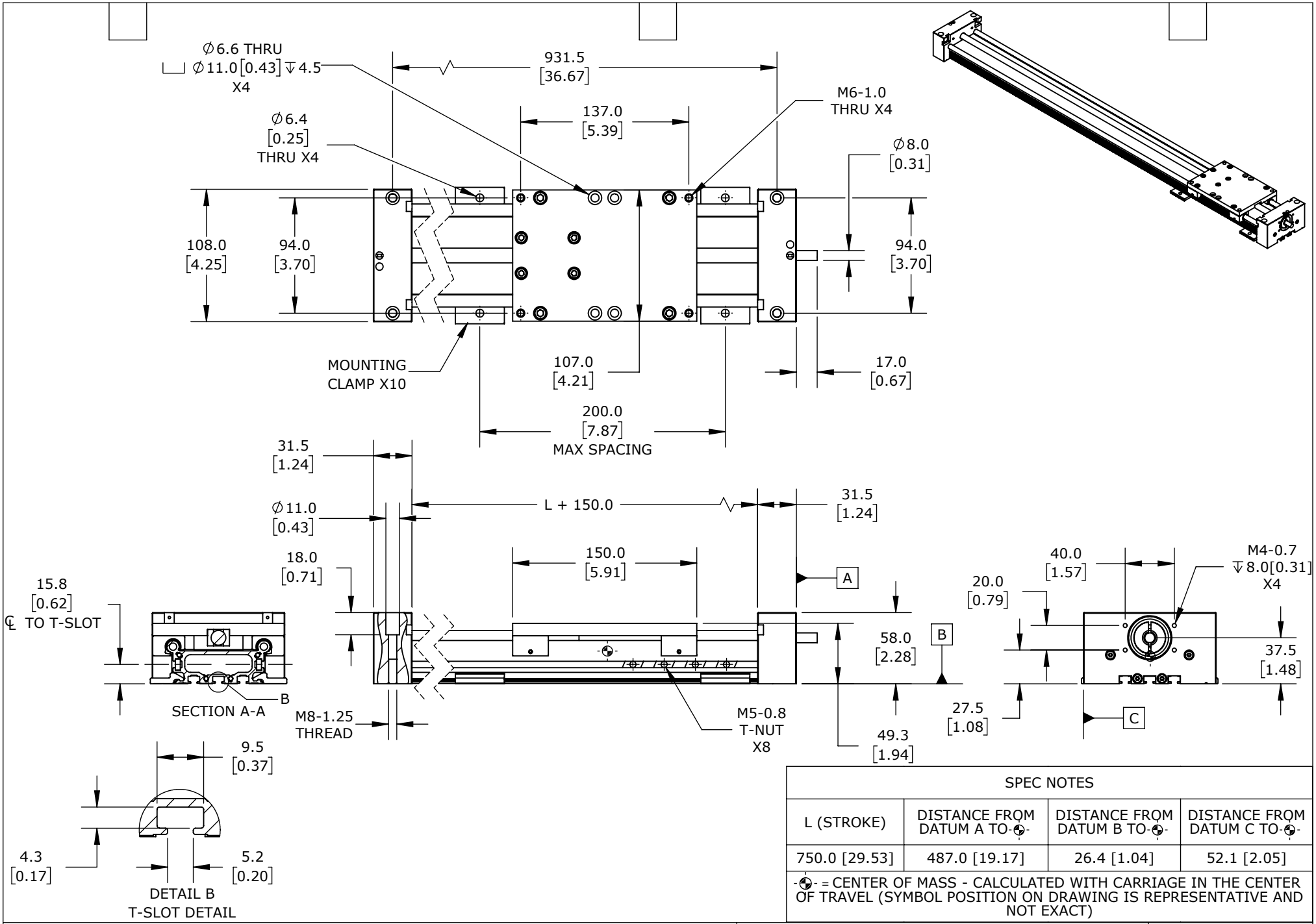

SPEC NOTES			
L (STROKE)	DISTANCE FROM DATUM A TO-⊕-	DISTANCE FROM DATUM B TO-⊕-	DISTANCE FROM DATUM C TO-⊕-
750.0 [29.53]	487.0 [19.17]	26.4 [1.04]	52.1 [2.05]

-⊕- = CENTER OF MASS - CALCULATED WITH CARRIAGE IN THE CENTER OF TRAVEL (SYMBOL POSITION ON DRAWING IS REPRESENTATIVE AND NOT EXACT)

LINEAR ACTUATOR, 750MM STROKE

SAW1080-7.5-A

AutomationDirect.com
1-800-633-0405

3rd ANGLE	NOT TO SCALE	PART DIMENSIONS MAY DIFFER SLIGHTLY DUE TO MANUFACTURER'S VARIANCES	METRIC UNITS USED FOR PART DESIGN	UNLESS OTHERWISE SPECIFIED UNITS ARE:	**mm [inch]**	LATEST VERSION 7/25/2022	SHEET 1 OF 1