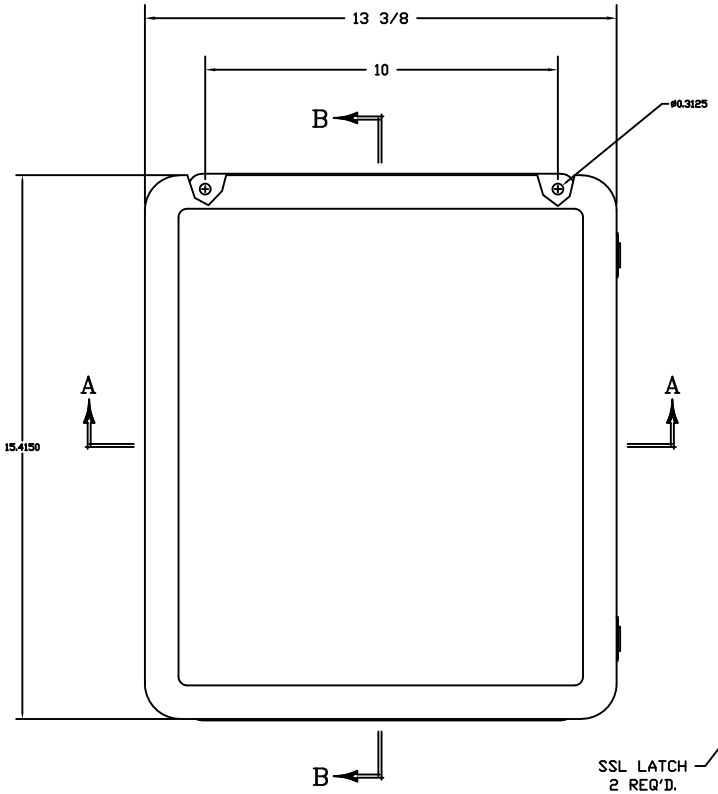

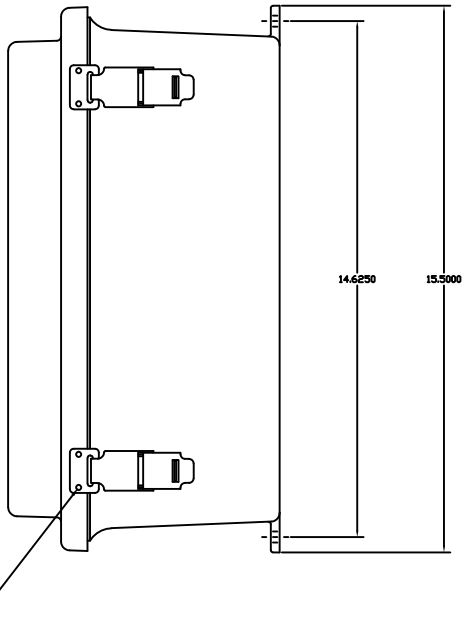

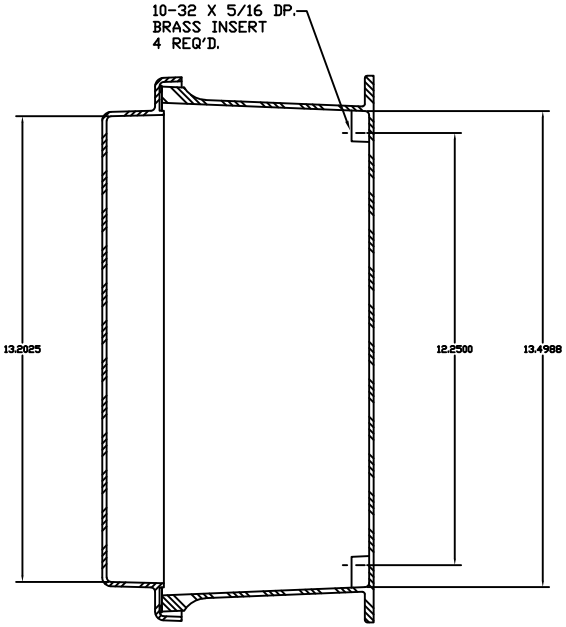

SECTION B–B

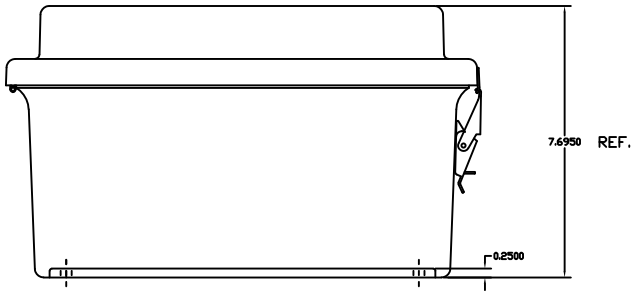

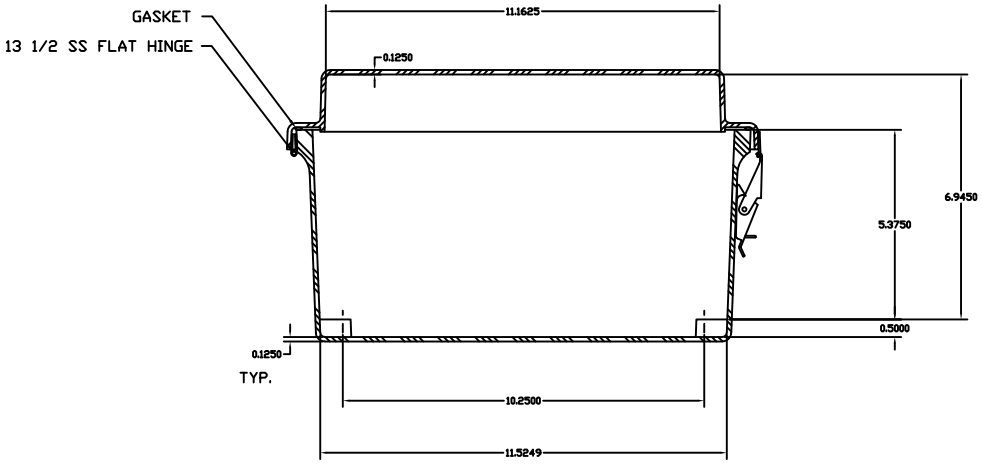

SECTION A–A

STAHLIN RJ SERIES ENCLOSURE, NEMA 1/3R/4X/6P/12, 14 X 12 X 7IN (HXWXD), WALL MOUNT, FIBERGLASS REINFORCED POLYESTER, GRAY, RAISED SINGLE-DOOR, (2) QUICK-RELEASE LATCHES, PADLOCK HASP AND STAPLE.			RJ1412HPL				AutomationDirect.com 1-800-633-0405
3rd ANGLE	NOT TO SCALE	PART DIMENSIONS MAY DIFFER SLIGHTLY DUE TO MANUFACTURER'S VARIANCES	METRIC UNITS USED FOR PART DESIGN	UNLESS OTHERWISE SPECIFIED UNITS ARE:	inch [mm]	LATEST VERSION 1/27/2023	SHEET 1 OF 1