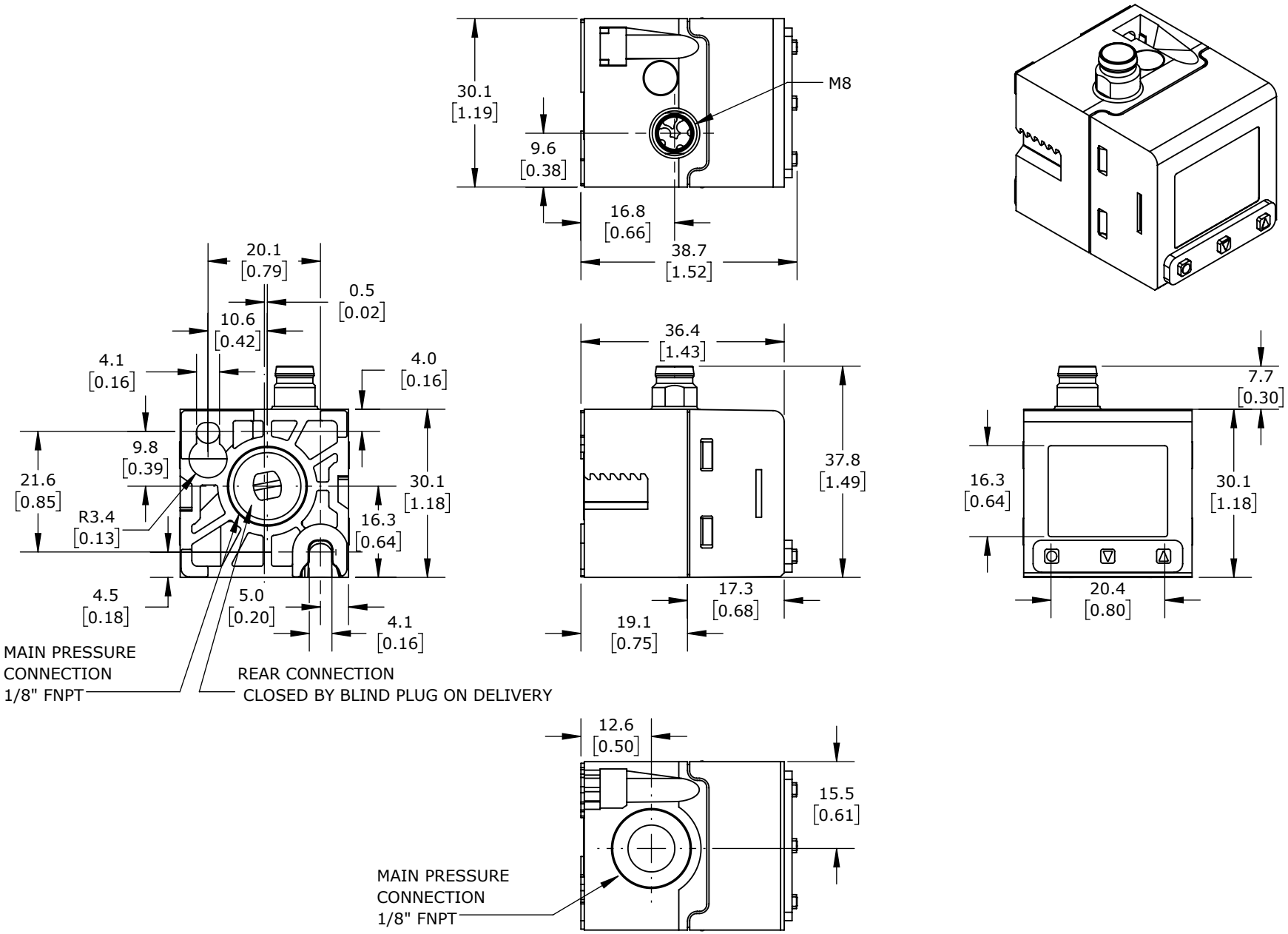

IFM EFECTOR PQ DIGITAL PRESSURE SENSOR, -14.5 TO 145 PSIG RANGE				PQC612			AutomationDirect.com 1-800-633-0405
3rd ANGLE	NOT TO SCALE	PART DIMENSIONS MAY DIFFER SLIGHTLY DUE TO MANUFACTURER'S VARIANCES	METRIC UNITS USED FOR PART DESIGN	UNLESS OTHERWISE SPECIFIED UNITS ARE: **mm** **[inch]**	MODEL REV.	DRAWING DATE 8/17/2026	SHEET 1 OF 1