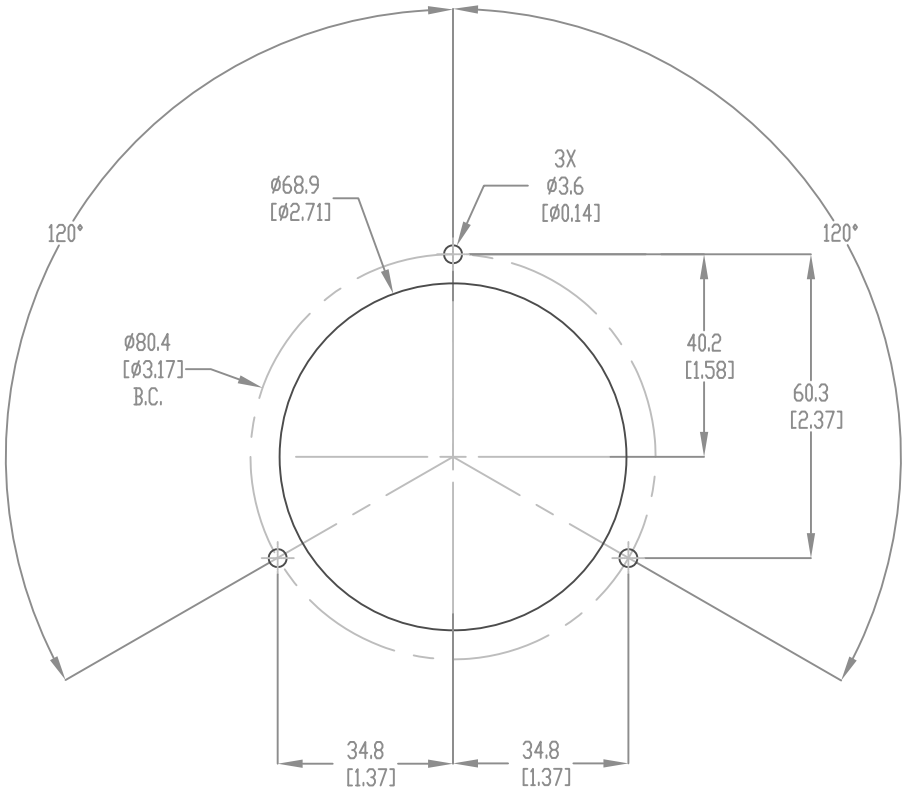

3 STUD FIXING MOUNT
120° EQUALLY SPACED
ON ø80.4mm B.C.

SIFAM TINSLEY CUTOUT TEMPLATE				PK-250-344-SJSJ			AutomationDirect.com 1-800-633-0405
3rd ANGLE	NOT TO SCALE	PART DIMENSIONS MAY DIFFER SLIGHTLY DUE TO MANUFACTURER'S VARIANCES	METRIC UNITS USED FOR PART DESIGN	UNLESS OTHERWISE SPECIFIED UNITS ARE:	mm [inch]	LATEST VERSION 2/12/2025	SHEET 1 OF 1