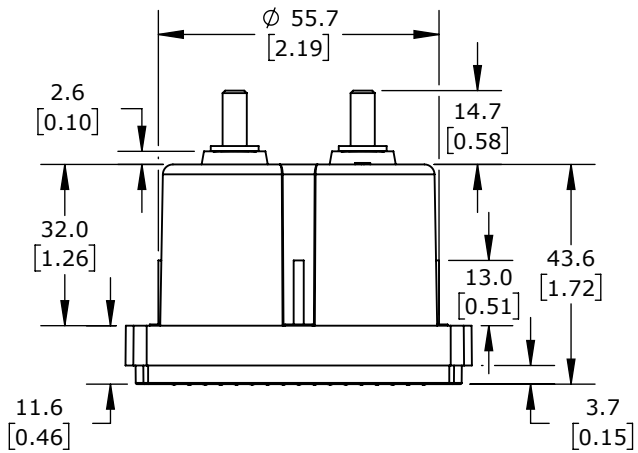

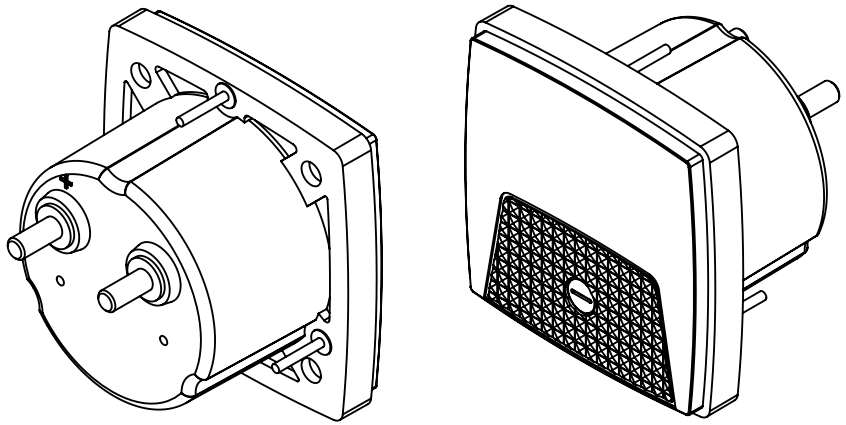

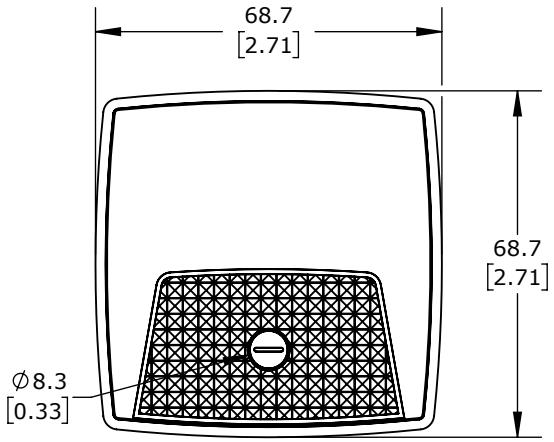

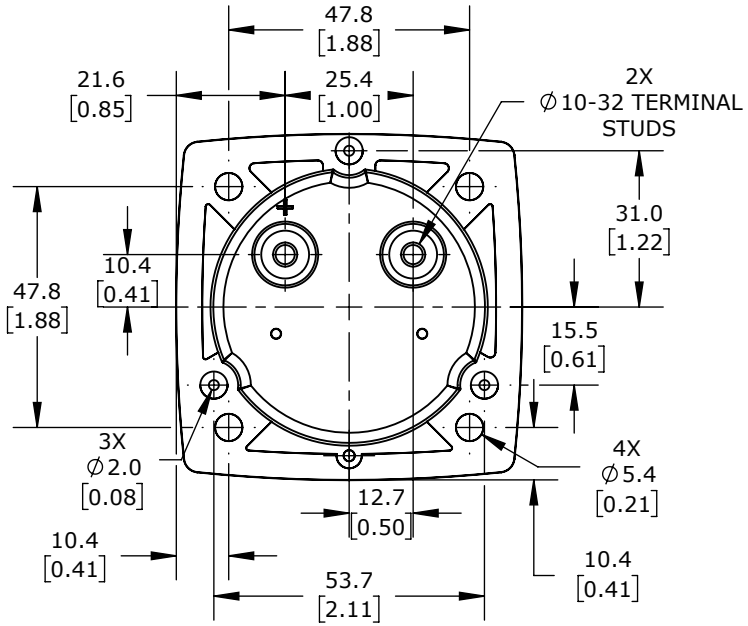

SIFAM TINSLEY SMART LOOK PANEL METER, 2.5IN ANALOG DIAL DISPLAY, 0-100A AC, CURRENT INPUT, TRANSFORMER RATED, MOVING IRON, ROUND 3-HOLE MOUNT				PK-250-240-LSPK			AutomationDirect.com 1-800-633-0405
3rd ANGLE	NOT TO SCALE	PART DIMENSIONS MAY DIFFER SLIGHTLY DUE TO MANUFACTURER'S VARIANCES	METRIC UNITS USED FOR PART DESIGN	UNLESS OTHERWISE SPECIFIED UNITS ARE:	**mm [inch]**	LATEST VERSION 3/19/2025	SHEET 1 OF 1