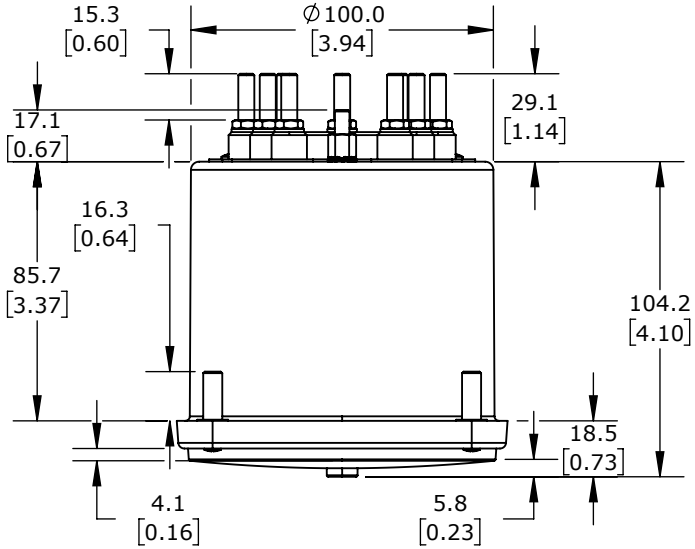

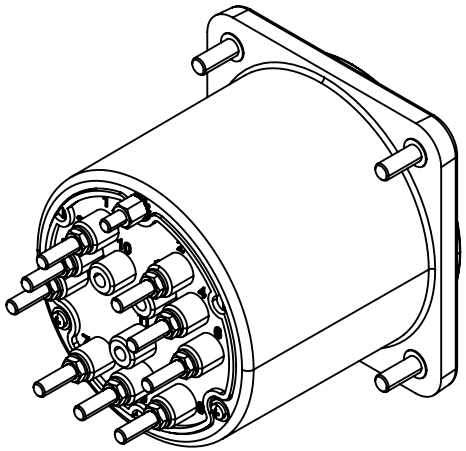

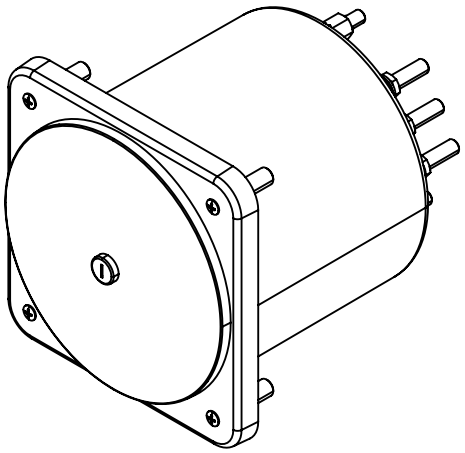

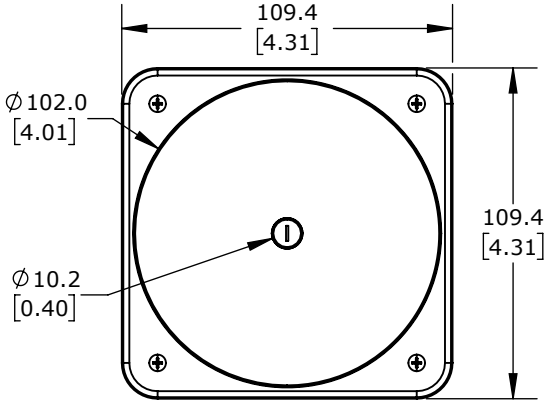

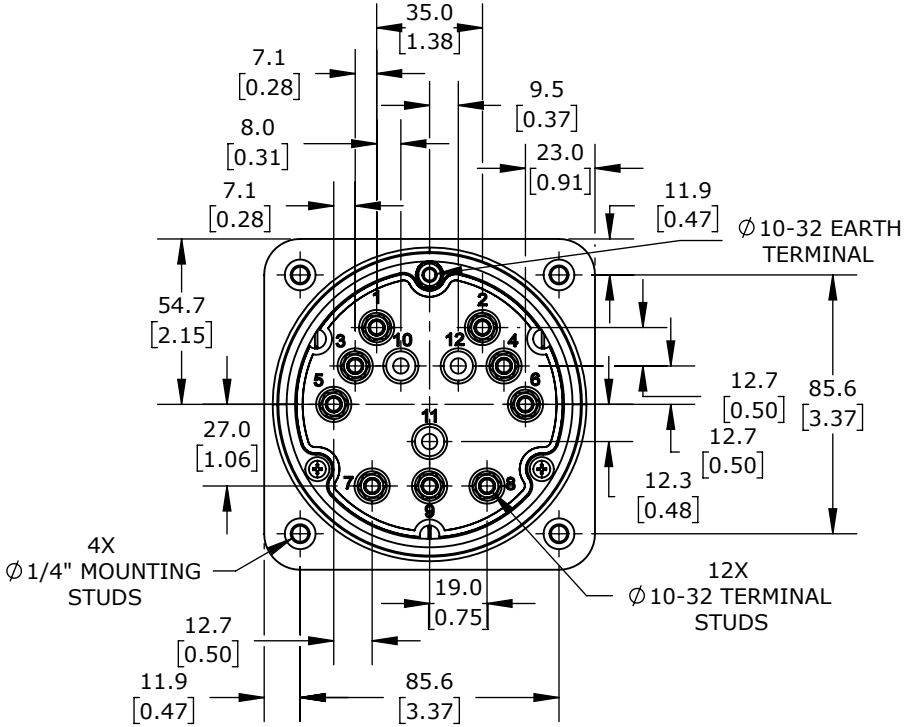

SIFAM TINSLEY MCS SWITCHBOARD METER, 4.5IN ANALOG DIAL DISPLAY, 0.5-1-0.5 POWER FACTOR, 1-PHASE VOLTAGE AND CURRENT INPUT, TRANSFORMER RATED, PIVOT AND JEWEL, ROUND 4-HOLE MOUNT				PK-103-412-FCAD-C6			AutomationDirect.com 1-800-633-0405
3rd ANGLE	NOT TO SCALE	PART DIMENSIONS MAY DIFFER SLIGHTLY DUE TO MANUFACTURER'S VARIANCES	METRIC UNITS USED FOR PART DESIGN	UNLESS OTHERWISE SPECIFIED UNITS ARE:	**mm [inch]**	LATEST VERSION 4/30/2025	SHEET 1 OF 1