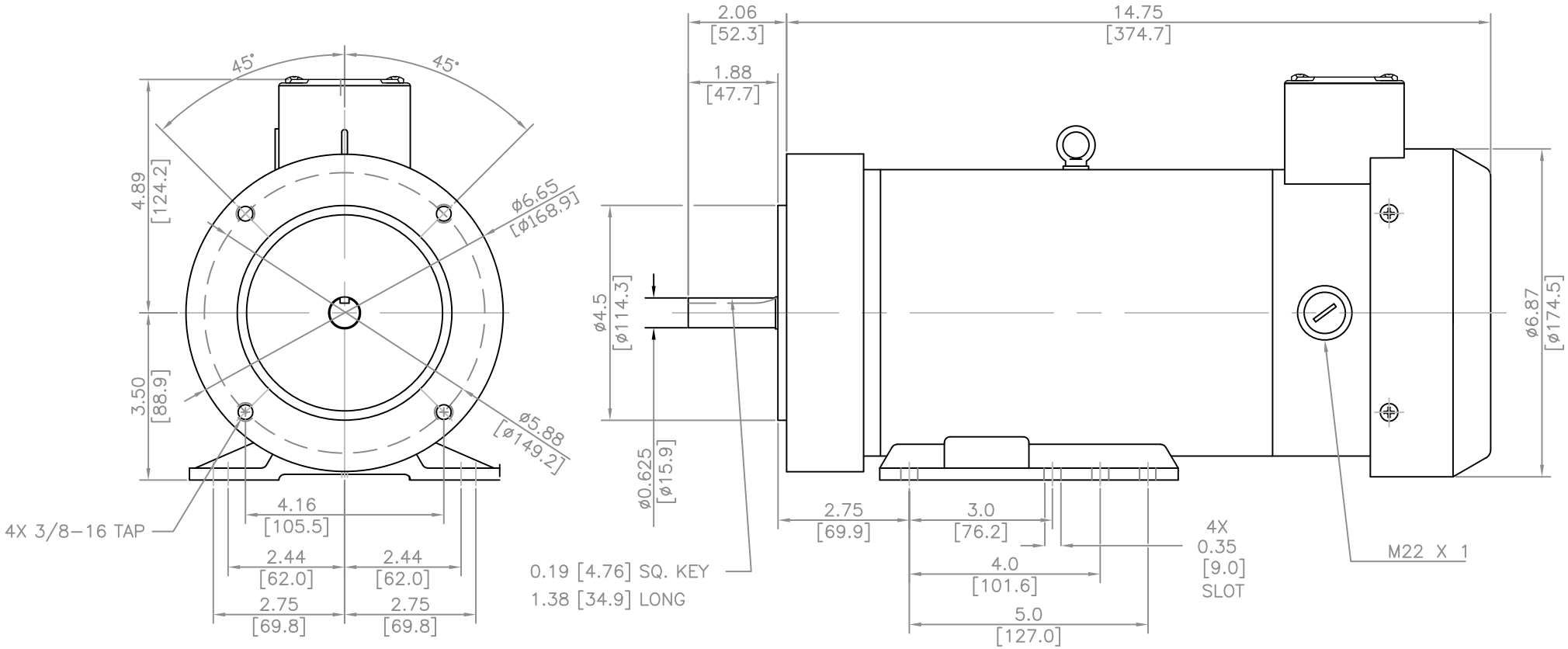

MTPM–002–1M18

Units: inches [mm]

Scale: Full

DC MOTOR,
2 HP, 180VDC, 1800RPM

AUTOMATIONDIRECT.com