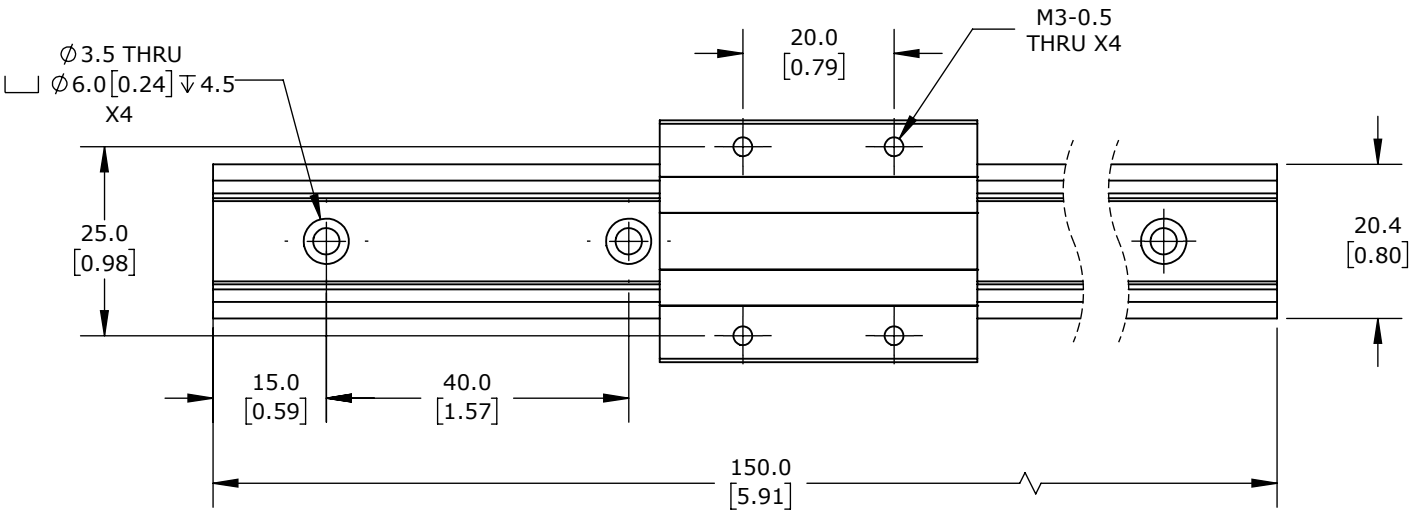

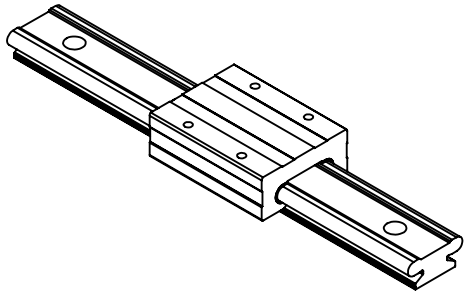

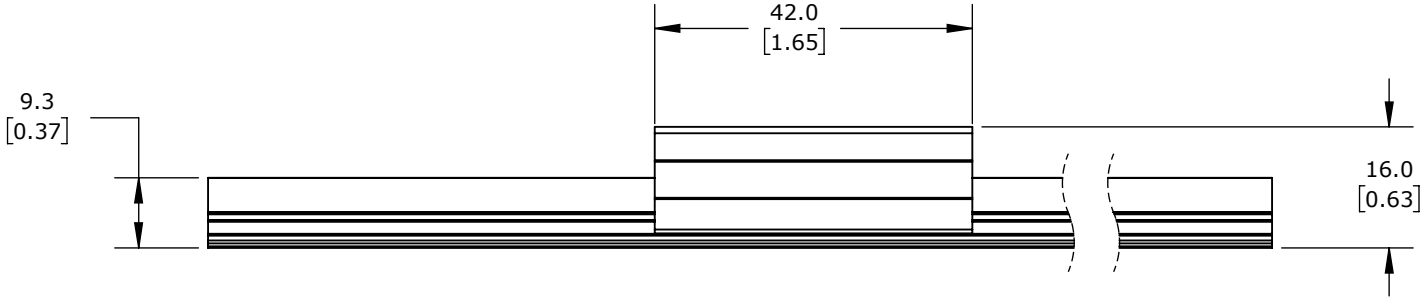

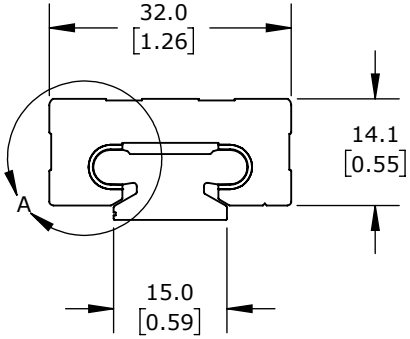

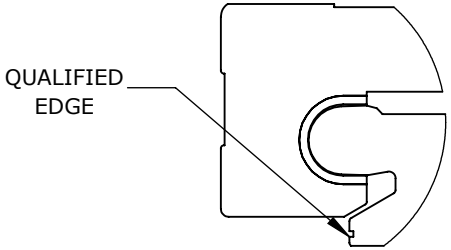

DETAIL A
SCALE 2 : 1

CERAMIC-COATED ALUMINUM, 150 X 15 X 9.2mm. (1) ANODIZED ALUMINUM PLAIN BEARING CARRIAGE INCLUDED.

PBC MINI-RAIL SERIES GUIDE TRACK				MR15-0150-1			AutomationDirect.com 1-800-633-0405
3rd ANGLE	NOT TO SCALE	PART DIMENSIONS MAY DIFFER SLIGHTLY DUE TO MANUFACTURER'S VARIANCES	METRIC UNITS USED FOR PART DESIGN	UNLESS OTHERWISE SPECIFIED UNITS ARE:	**mm [inch]**	LATEST VERSION 1/13/2025	SHEET 1 OF 1