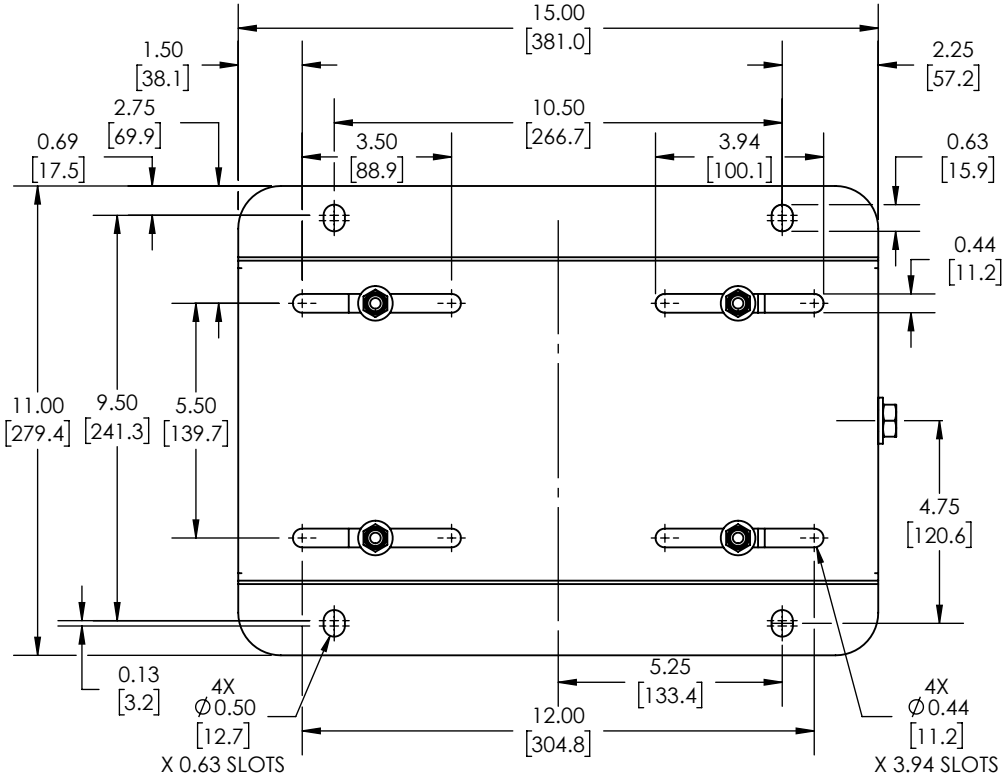

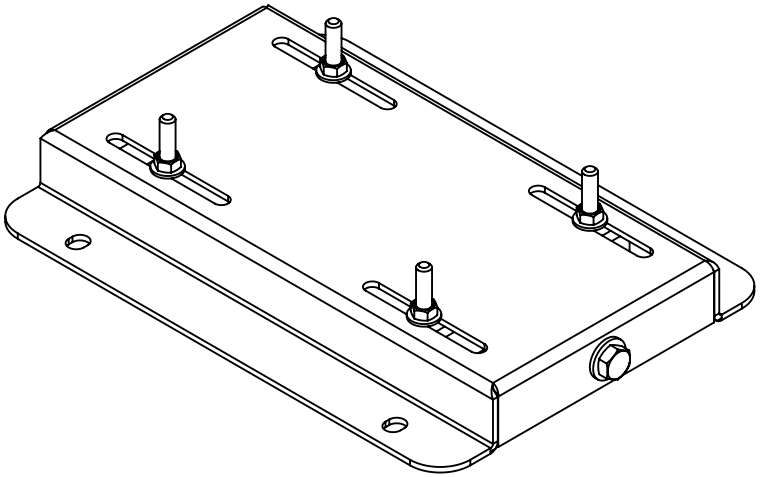

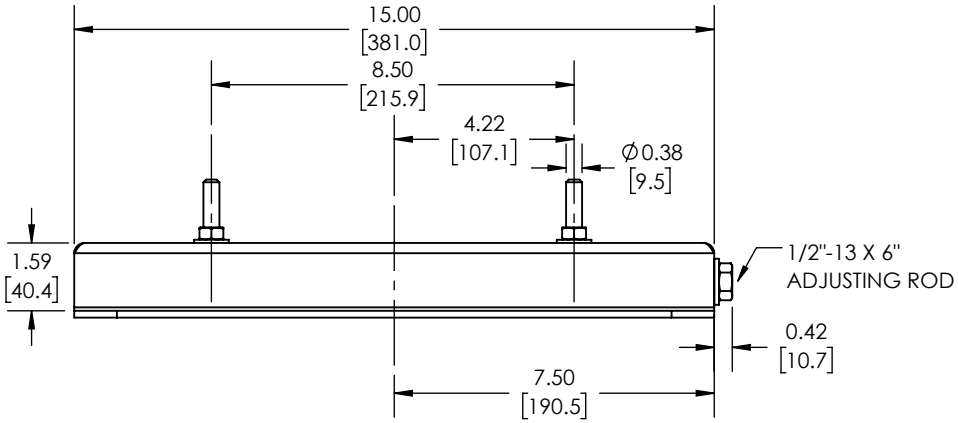

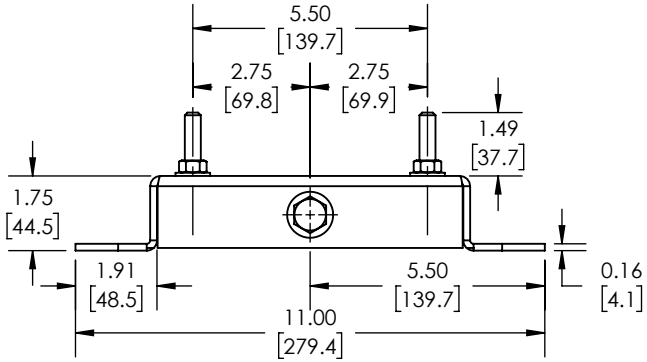

IRONHORSE ADJUSTABLE MOTOR BASE, FOR USE WITH 213T FRAME MOTORS				MBS-SFBASE-213			AutomationDirect.com 1-800-633-0405
3rd ANGLE	NOT TO SCALE	PART DIMENSIONS MAY DIFFER SLIGHTLY DUE TO MANUFACTURER'S VARIANCES	METRIC UNITS USED FOR PART DESIGN	UNLESS OTHERWISE SPECIFIED UNITS ARE: **inch** **[mm]**	MODEL REV.	LATEST VERSION 6/15/2026	SHEET 1 OF 1