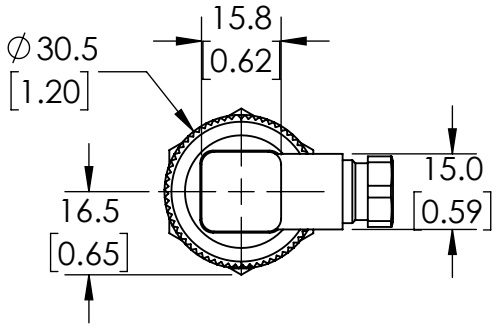

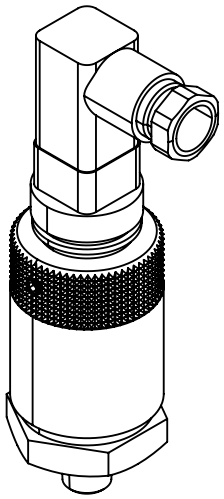

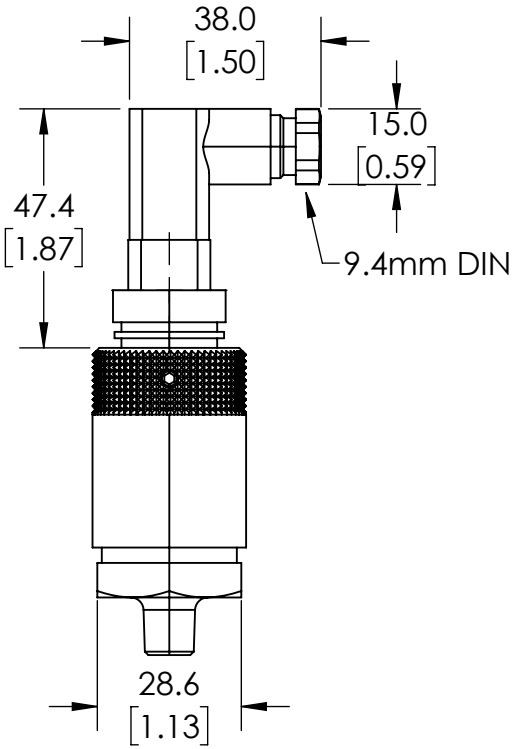

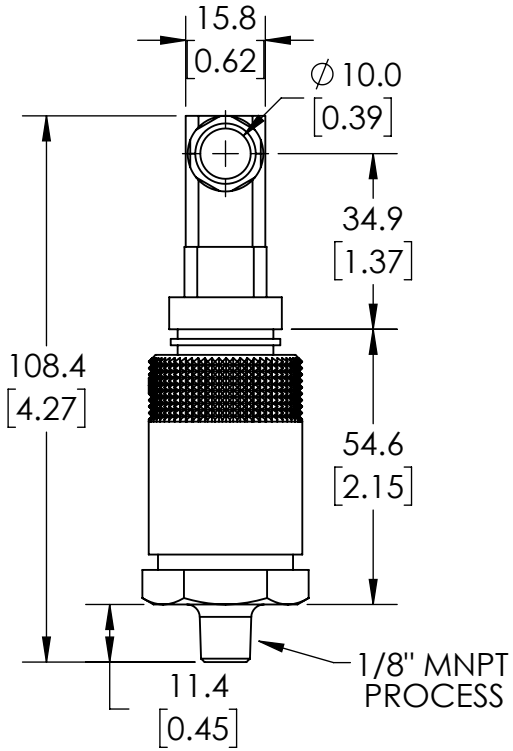

AchieVe MECHANICAL PRESSURE SWITCH				LPPS18-1C-D120D		AutomationDirect.com 1-800-633-0405
3rd ANGLE	NOT TO SCALE	PART DIMENSIONS MAY DIFFER SLIGHTLY DUE TO MANUFACTURER'S VARIANCES	METRIC UNITS USED FOR PART DESIGN	UNLESS OTHERWISE SPECIFIED UNITS ARE: **mm** **[inch]**	MODEL REV.	LATEST VERSION 1/6/2026	SHEET 1 OF 1