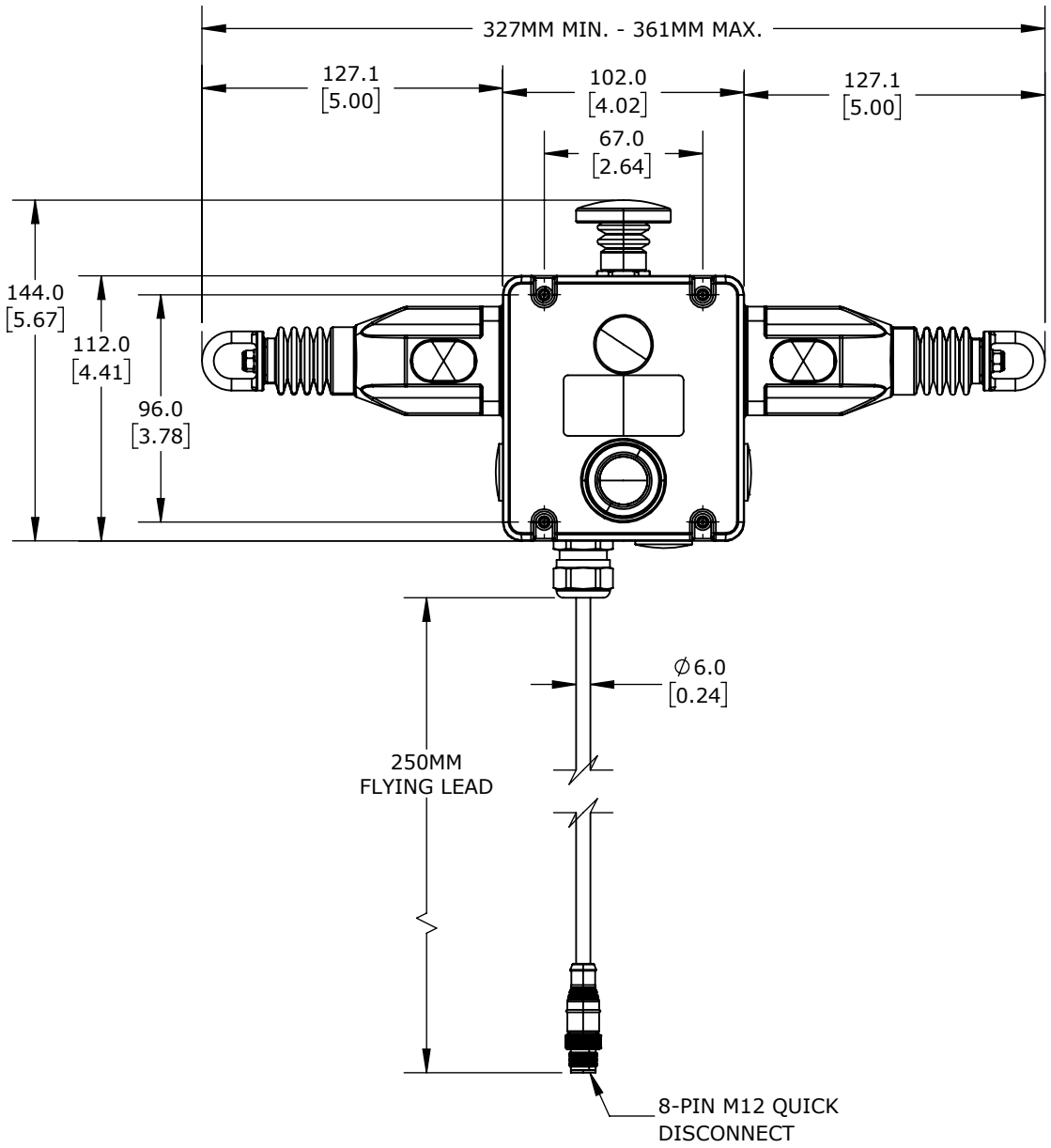

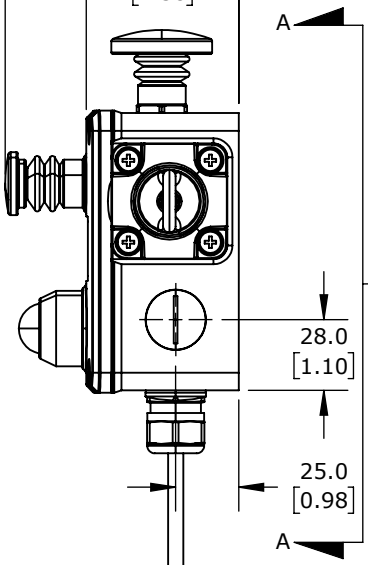

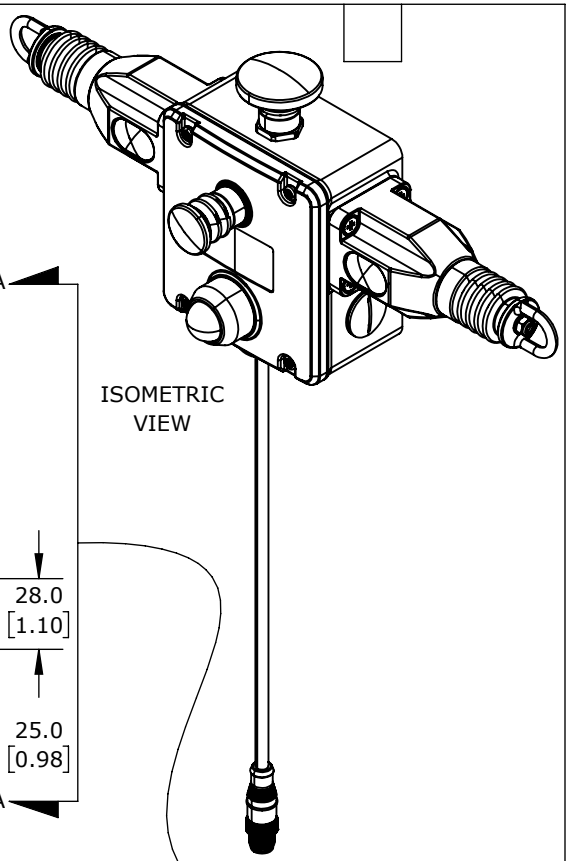

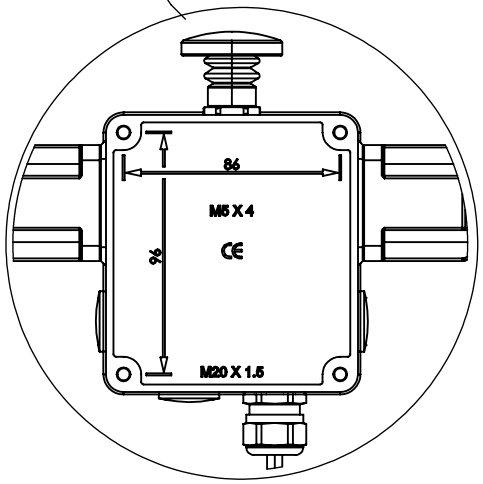

DETAIL A

IDEM Z-RANGE SAFETY SWITCH, CABLE-PULL INTERLOCK, 250M MAXIMUM PULL CABLE LENGTH, EMERGENCY STOP, DUAL HEAD, (2) OSSD SAFETY OUTPUT(S), (1) STATUS MONITORING OUTPUT(S), DUAL COLOR LED, 316 STAINLESS STEEL BODY, 8-PIN M12 QUICK-DISCONNECT.

GLHD-SS-145300-Z

AutomationDirect.com
1-800-633-0405

3rd ANGLE	NOT TO SCALE	PART DIMENSIONS MAY DIFFER SLIGHTLY DUE TO MANUFACTURER'S VARIANCES	METRIC UNITS USED FOR PART DESIGN	UNLESS OTHERWISE SPECIFIED UNITS ARE:	**mm [inch]**	LATEST VERSION 9/21/2023	SHEET 1 OF 1